SONY

VIDEOCASSETTE RECORDER

BVW-85P

BETACAM SP

MAINTENANCE MANUAL

Volume 2 1st Edition(Revised 2)

Serial No. 10001 and Higher

EBU N-10 LEVEL

このマニュアルに記載されている事柄の著作権は当社にあり，説明内容は機器購入者の使用を目的としています。
従って，当社の許可なしに無断で複写したり，説明内容(操作，保守等）と異なる目的で本マニュアルを使用することを禁止します。

The material contained in this manual consists of information that is the property of Sony Corporation and is intended solely for use by the purchasers of the equipment described in this manual.
Sony Corporation expressly prohibits the duplication of any portion of this manual or the use thereof for any purpose other than the operation or maintenance of the equipment described in this manual without the express written permission of Sony Corporation.

Le matériel contenu dans ce manuel consiste en informations qui sont la propriété de Sony Corporation et sont destinées exclusivement à l'usage des acquéreurs de l'équipement décrit dans ce manuel.
Sony Corporation interdit formellement la copie de quelque partie que ce soit de ce manuel ou son emploi pour tout autre but que des opérations ou entretiens de l'équipement à moins d'une permission écrite de Sony Corporation.

Das in dieser Anleitung enthaltene Material besteht aus Informationen, die Eigentum der Sony Corporation sind, und ausschließlich zum Gebrauch durch den Käufer der in dieser Anleitung beschriebenen Ausrüstung bestimmt sind.
Die Sony Corporation untersagt ausdrücklich die Vervielfältigung jeglicher Teile dieser Anleitung oder den Gebrauch derselben für irgendeinen anderen Zweck als die Bedienung oder Wartung der in dieser Anleitung beschriebenen Ausrüstung ohne ausdrückliche schriftliche Erlaubnis der Sony Corporation.

TABLE OF CONTENTS

Volume 1

1. INSTALLATION
2. SERVICE INFORMATION
3. SELF DIAGNOSIS FUNCTION
4. PERIODIC CHECK AND MAINTENANCE
5. REPLACEMENT OF MAJOR PARTS
6. LINK AND DRIVE SYSTEM ALIGNMENT
7. TORQUE ALIGNMENT
8. TAPE RUN ALIGNMENT
9. GENERAL INFORMATION FOR ELECTRICAL ALIGNMENT
10. POWER AND CONTROL SYSTEM ALIGNMENT
11. SERVO SYSTEM ALIGNMENT
12. AUDIO/TIME CODE SYSTEM ALIGNMENT
13. VIDEO SYSTEM ALIGNMENT
14. TBC SYSTEM ALIGNMENT
15. OVERALL VIDEO SYSTEM ALIGNMENT

Volume 2

16. BLOCK DIAGRAM

Overall 16-1
Y/C Separator 16-9
Decoder 16-13
R-Y/B-Y Compressor
Y/C Modulator 16-17
Y/C REC/PB Amplifier 16-21
Y/C Demodulator 16-25
Write Clock Generator 16-29
A/D Converter
Main Memory 16-33
D/A Converter
Y Digital Noise
Reduction
REF Signal/Timing Generator 16-37
Encoder 16-41
Video Output 16-44
AGC for AFM
LNG Audio 16-47
AFM Audio 16-55
Audio Meter 16-58
Microcomputer Servo 16-61
Reel Servo 16-64
Drum/Capstan Servo 16-67
System Control 16-71
I/O Expander 16-75
Time Code
Reader/Generator
Time Base Impact
Error Corrector
LTC REC/PB Amplifier 16-79
Dynamic Tracking 16-83

17. SCHEMATIC DIAGRAM AND PRINTED WIRING BOARDS

Circuit Configuration 17-1

VIDEO/TBC

DEC-46P (1/2) 17-5
DEC-46P (2/2) 17-11
DEC-42P (1/5) 17-27
DEC-42P (2/5) 17-33
DEC-42P (3/5) 17-41
DEC-42P (4/5) 17-47
DEC-42P (5/5) 17-55
CF-36P
MD-46P (1/2) 17-77
MD-46P (2/2) 17-85
RP-46P (1/3) 17-103
RP-46P (2/3) 17-111
RP-46P (3/3) 17-119
PA-110 17-131
DM-56PC (1/2) 17-139
DUS-288
DUS-345
EQ-26
DM-56PC (2/2) 17-147
DUS-259
DUS-269
DUS-345
EQ-28
TBC-7D (1/3) 17-171
TBC-7D (2/3) 17-177
TBC-7D (3/3) 17-185
TBC-12PC (1/3) 17-203
TG-52A
TBC-12PC (2/3) 17-211
TBC-12PC (3/3) 17-217
NR-32PC 17-233
TBC-9PC (1/2) 17-247
TBC-9PC (2/2) 17-255
TG-52
EN-48P (1/3) 17-275
EN-48P (2/3) 17-283
EN-48P (3/3) 17-291
VO-18P (1/3) 17-307
VO-18P (2/3) 17-315
DUS-270
VO-18P (3/3)
RE-69 17-329
CP-103P
CP-101P (1/2) 17-341
CP-101P (2/2)
CP-153 17-353
DP-121

AUDIO

BF-28 (1/3) 17-361
VR-42
BF-28 (2/3) 17-367
BF-28 (3/3) 17-373
AU-75P 17-383
DUS-295
AU-76PC (1/3) 17-397
AU-76PC (2/3) 17-403
AU-76PC (3/3) 17-409
AFM-1 17-419
CP-154 17-433
CP-161 (1/4) 17-441
CP-161 (2/4) 17-449
CP-161 (3/4) 17-457
CP-161 (4/4) 17-463
HP-33
VR-62
SW-144PC 17-479
VR-61
DP-72
DP-73
DP-74

SERVO

SV-82PC (1/2) 17-499
SV-82PC (2/2) 17-505
SV-121 (1/2) 17-517
SV-121 (2/2) 17-523
SV-122 (1/2) 17-535
SV-122 (2/2) 17-539
RE-28PC 17-551
PTC-20
PTC-21
PTC-23
PTC-36
DR-56

RE-36 17-565
RM-40
DE-15
SE-146
PTC-31
PTC-40
TR-18
DT-13PC 17-581
DT-14PC (1/2) 17-593
DT-14PC (2/2) 17-599
DUS-282
DT-15 17-611

SYSTEM CONTROL

SY-151 (113) 17-619
SY-151 (2/3) 17-627
SY-151 (3/3) 17-633
RM-92
SY-64P (1/6) 17-653
SY-64P (2/6) 17-661
SY-64P (3/6) 17-667
SY-64P (4/6) 17-671
SY-64P (5/6) 17-677
SY-64P (6/6)
PD-35 17-693
PTC-15
CL-14
CL-24
CCM-2
PC-33
PC-41
PC-47
HC-11

CONTROL PANEL

KY-188PC 17-705
KY-205
KY-206
DP-136
PTC-39
PT-9

TIME CODE

TC-40P (1/3) 17-727
TC-40P (2/3) 17-733
TD-10
TC-40P(3/3) 17-741

POWER SUPPLY

AC-96 17-753
M1
M2
C1
C2
SOPS-1015 17-761

FRAME

MB-331 (1/4) 17-765
MB-331 (2/4) 17-773
MB-331 (3/4) 17-781
MB-331 (4/4) 17-789
MB-332 17-803
FRAME (1/5) 17-815
FRAME (2/5) 17-821
FRAME (3/5) 17-827
FRAME (4/5) 17-833
FRAME (5/5) 17-839

18. SEMICONDUCTOR PIN ASSIGNMENT

19. SPARE PARTS AND FIXTURE

19-1. Parts Information 19-1
19-2. Exploded View 19-1
Supply Side Reel Chassis 19-5
Take-up side Reel Chassis 19-7
Head Drum, Stationary Heads and
Tape Guides Block 19-11
Threading Ring Block 19-13
T Drawer Arm Block 19-17
Supply Tension Regulator Block 19-19
Pinch Press Mechanism Block 19-23
Gear Box Block 19-24
Function Control Chassis Block 19-27
Level Control Chassis Block 19-29
Cassette-up Compartment 19-33
Connector Panel Block 19-35
Switching Regulator Block 19-39
Printed Circuit Block (1) 19-41
Printed Circuit Block (2) 19-45
Ornamental Panel Block 19-47
19-3. Electrical Parts List 19-51
Packing Material & Supplied Accesories 19-144
Optional Fixture 19-144

SECTION 16
BLOCK DIAGRAM

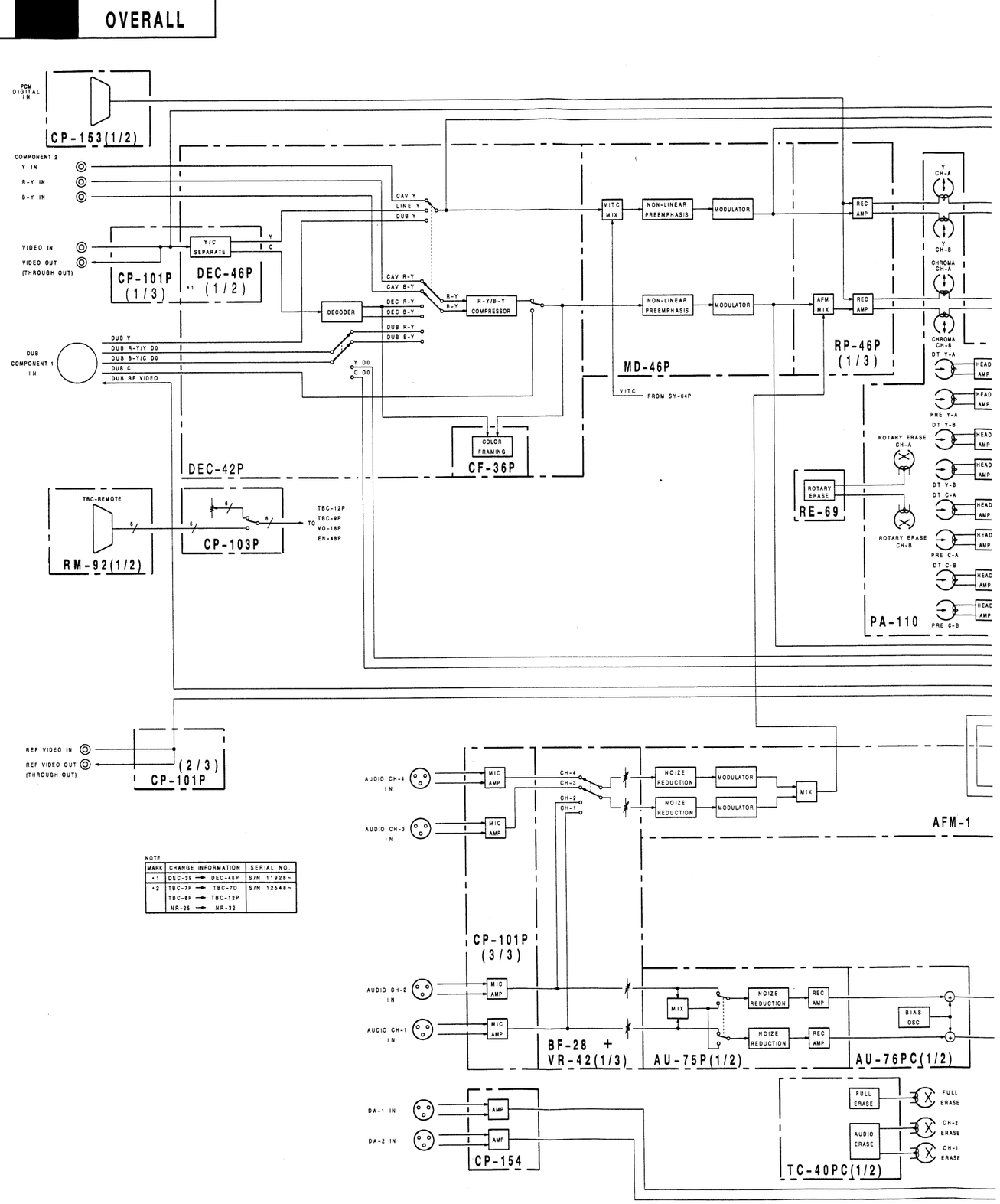

NOTE

MARK	CHANGE INFORMATION	SERIAL NO.
*1	DEC-39 → DEC-46P	S/N 11928~
*2	TBC-7P → TBC-7D	S/N 12548~
	TBC-8P → TBC-12P	
	NR-25 → NR-32	

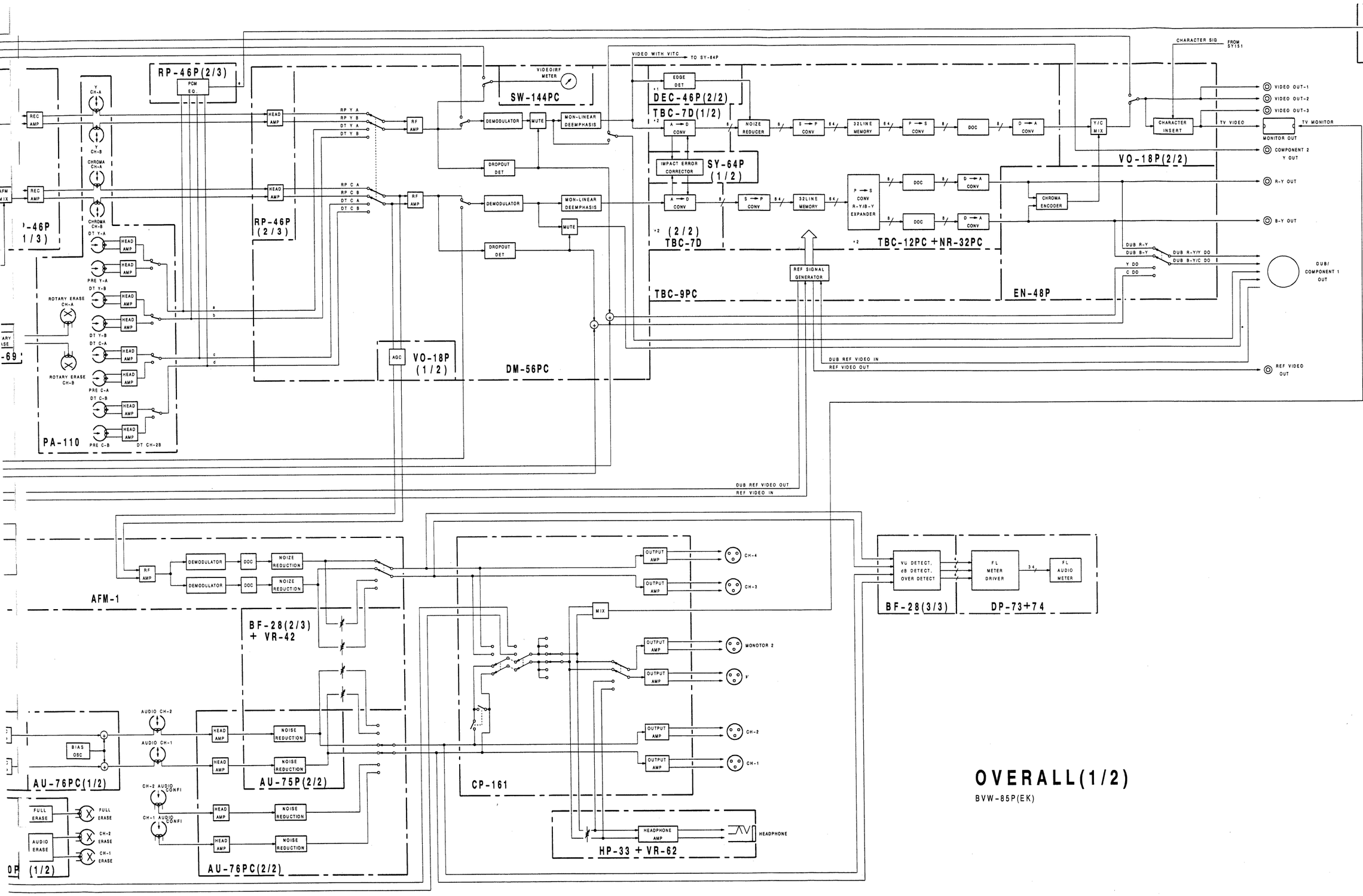

OVERALL(1/2)

BVW-85P(EK)

OVERALL

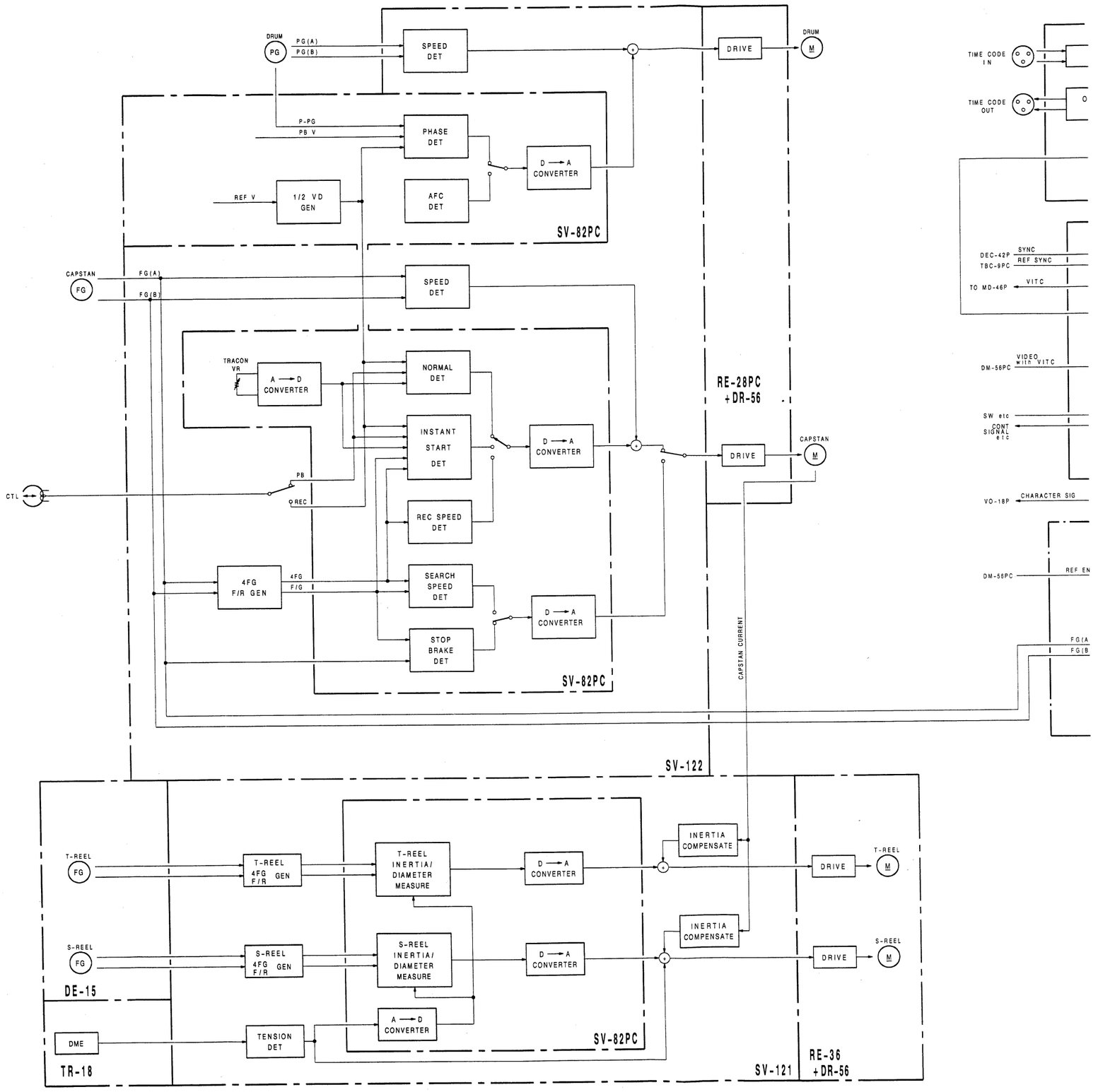
DRUM
PG
PG(A)
PG(B)
SPEED DET
DRIVE
DRUM
M
P-PG
PB V
PHASE DET
D → A CONVERTER
REF V
1/2 VD GEN
AFC DET
SV-82PC
CAPSTAN
FG
FG(A)
FG(B)
SPEED DET
TRACON VR
A → D CONVERTER
NORMAL DET
INSTANT START DET
D → A CONVERTER
RE-28PC + DR-56
DRIVE
CAPSTAN
M
CTL
PB
REC
REC SPEED DET
4FG F/R GEN
4FG
F/G
SEARCH SPEED DET
D → A CONVERTER
STOP BRAKE DET
SV-82PC
CAPSTAN CURRENT
SV-122
TIME CODE IN
TIME CODE OUT
DEC-42P
TBC-8PC
SYNC
REF SYNC
TO MD-46P
VITC
DM-56PC
VIDEO with VITC
SW etc
CONT SIGNAL etc
VO-18P
CHARACTER SIG
DM-58PC
REF EN
FG(A
FG(B
T-REEL
FG
T-REEL 4FG F/R GEN
T-REEL INERTIA/ DIAMETER MEASURE
D → A CONVERTER
INERTIA COMPENSATE
DRIVE
T-REEL
M
S-REEL
FG
S-REEL 4FG F/R GEN
S-REEL INERTIA/ DIAMETER MEASURE
D → A CONVERTER
INERTIA COMPENSATE
DRIVE
S-REEL
M
DE-15
A → D CONVERTER
SV-82PC
DME
TENSION DET
TR-18
SV-121
RE-36 + DR-56

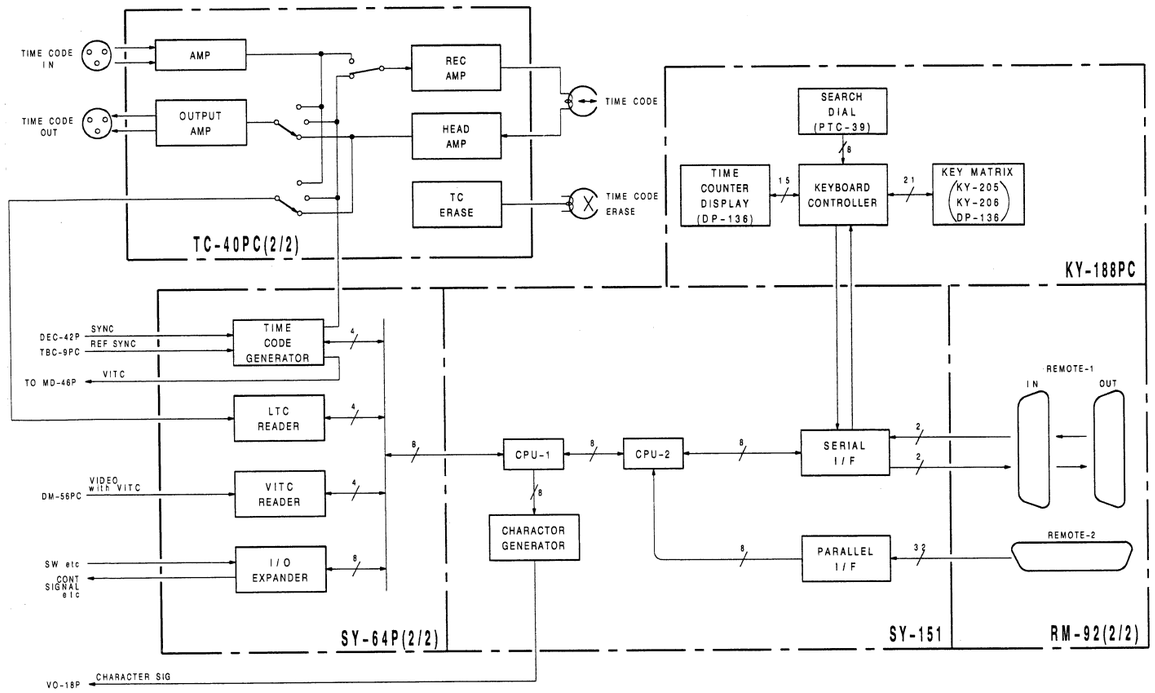

Note on Block Diagram

See the overall block diagram for the connector destination's board name in each board's block diagram.

OVERALL(2/2)

BVW-85P(EK)

Y/C SEPARATOR

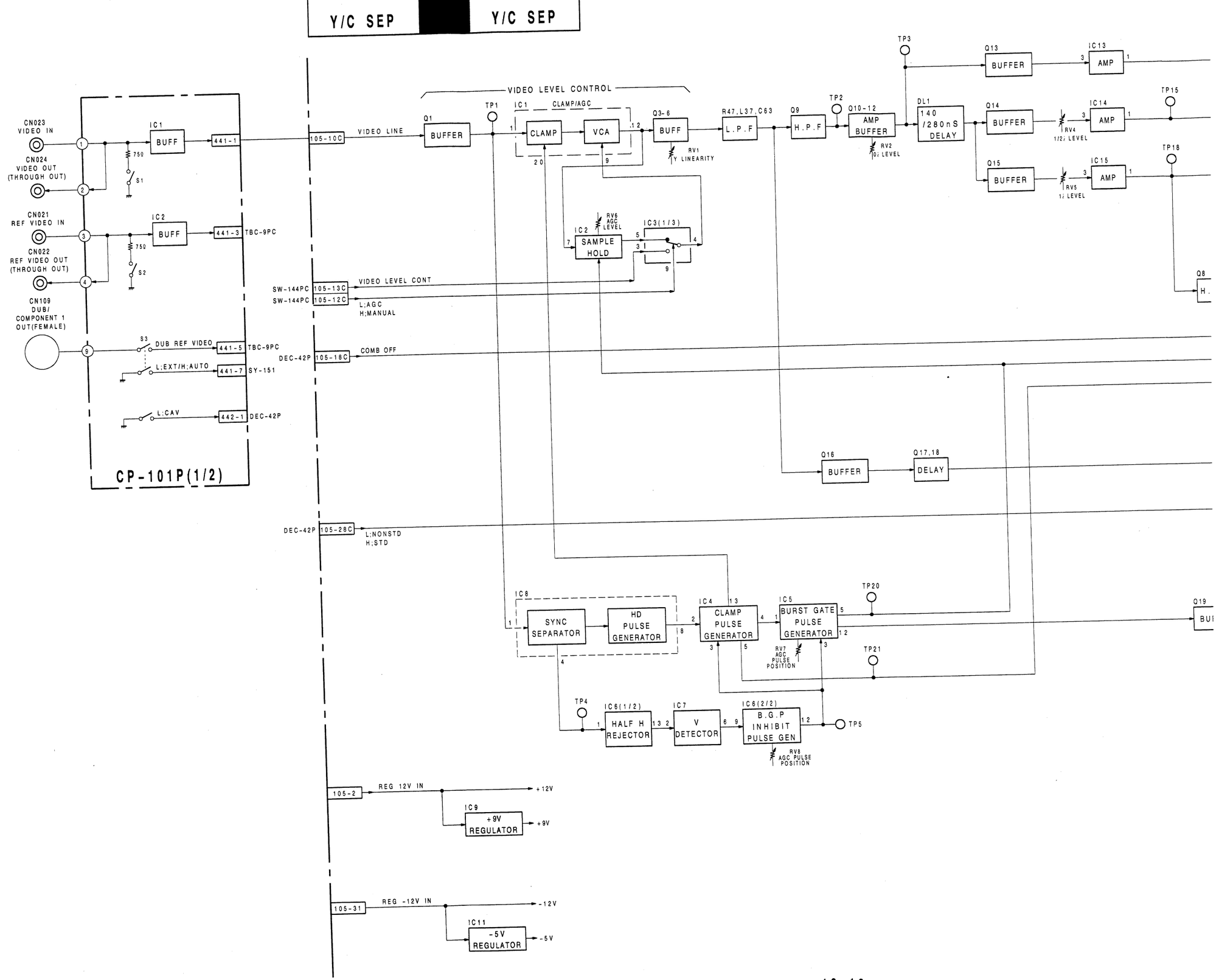

Y/C SEP | Y/C SEP

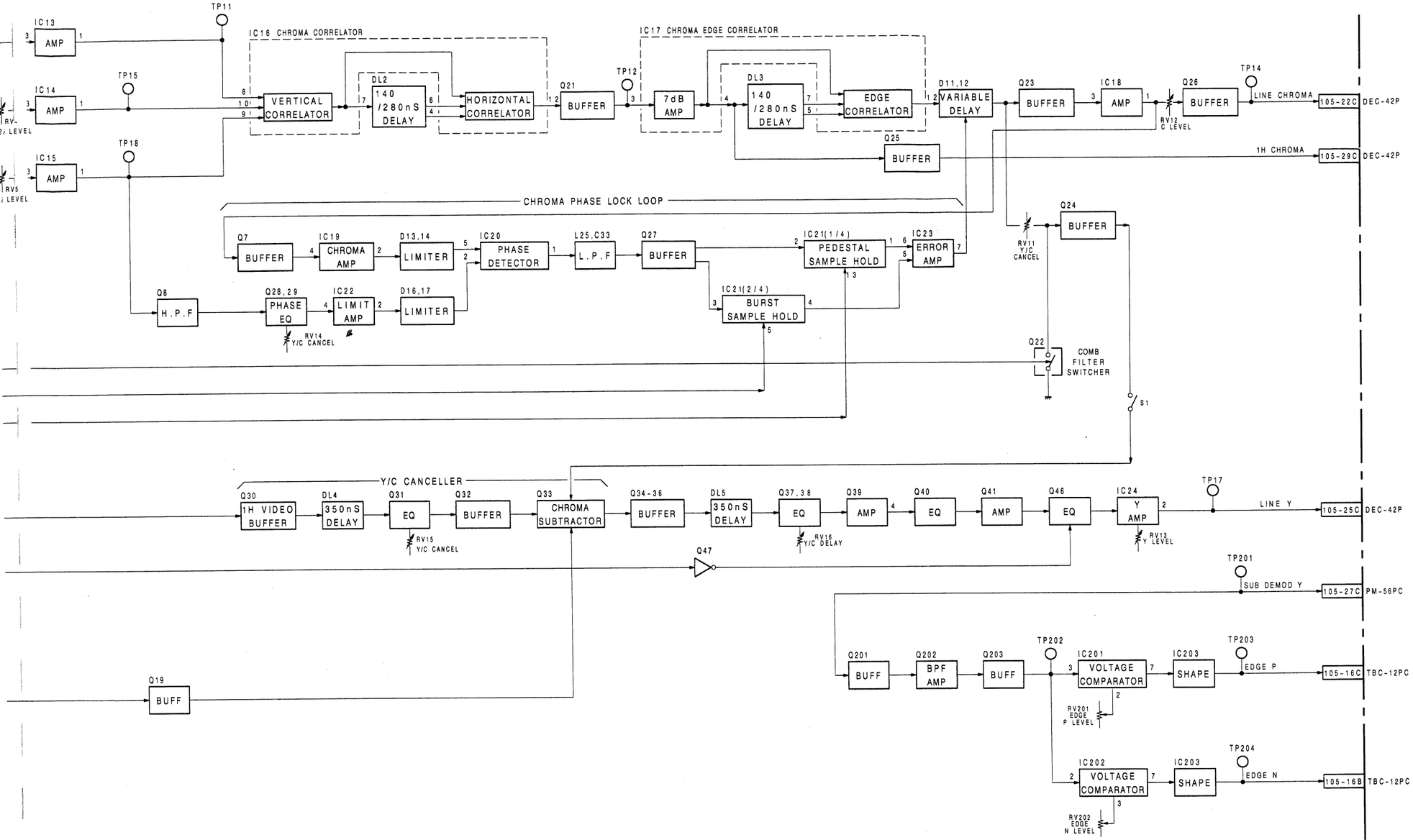

DEC-46P

BVW-85P(EK)

DEC CTDM CFDET

DECODER
R-Y/B-Y COMPRESSOR

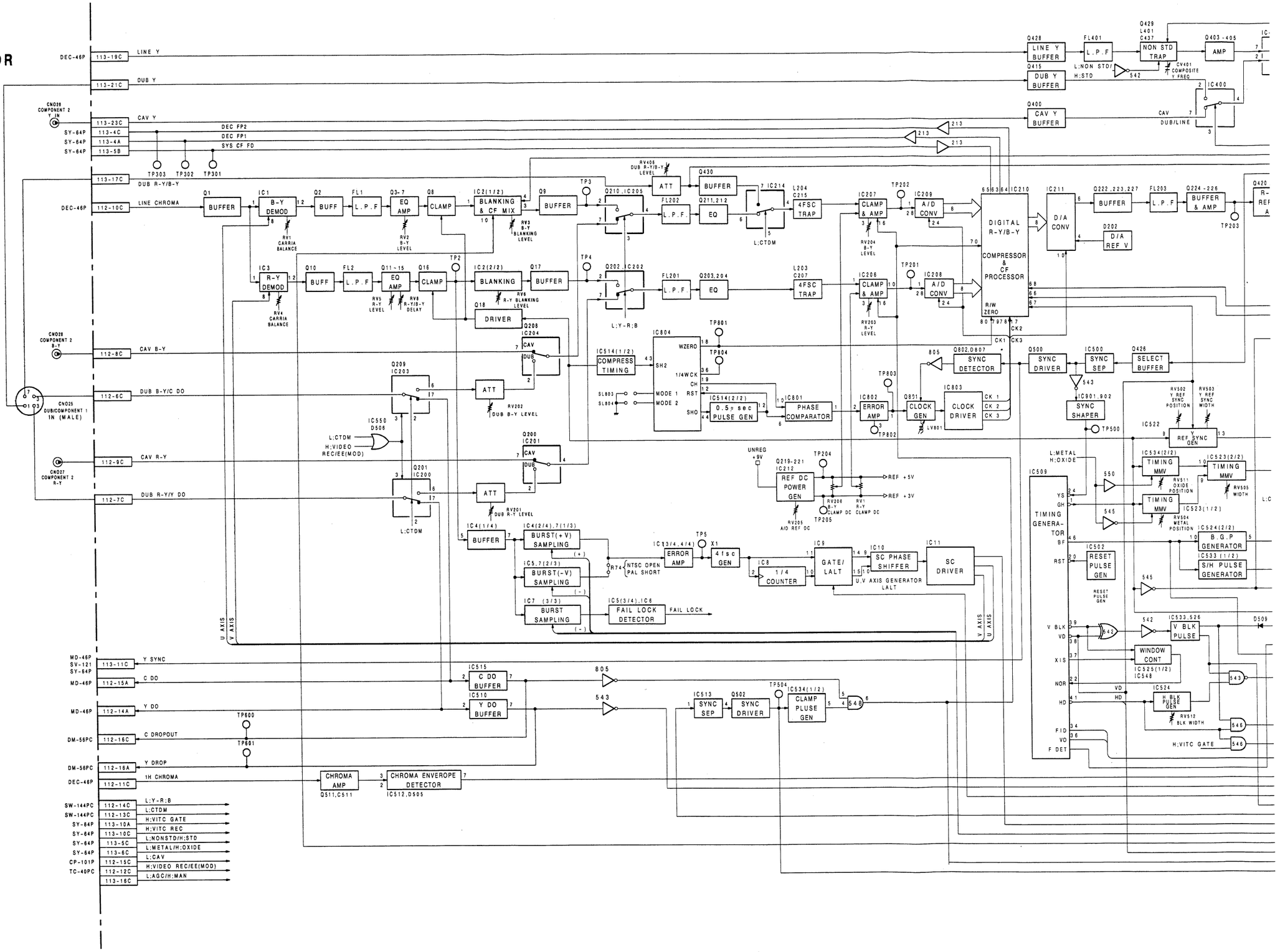

DEC CTDM CFDET

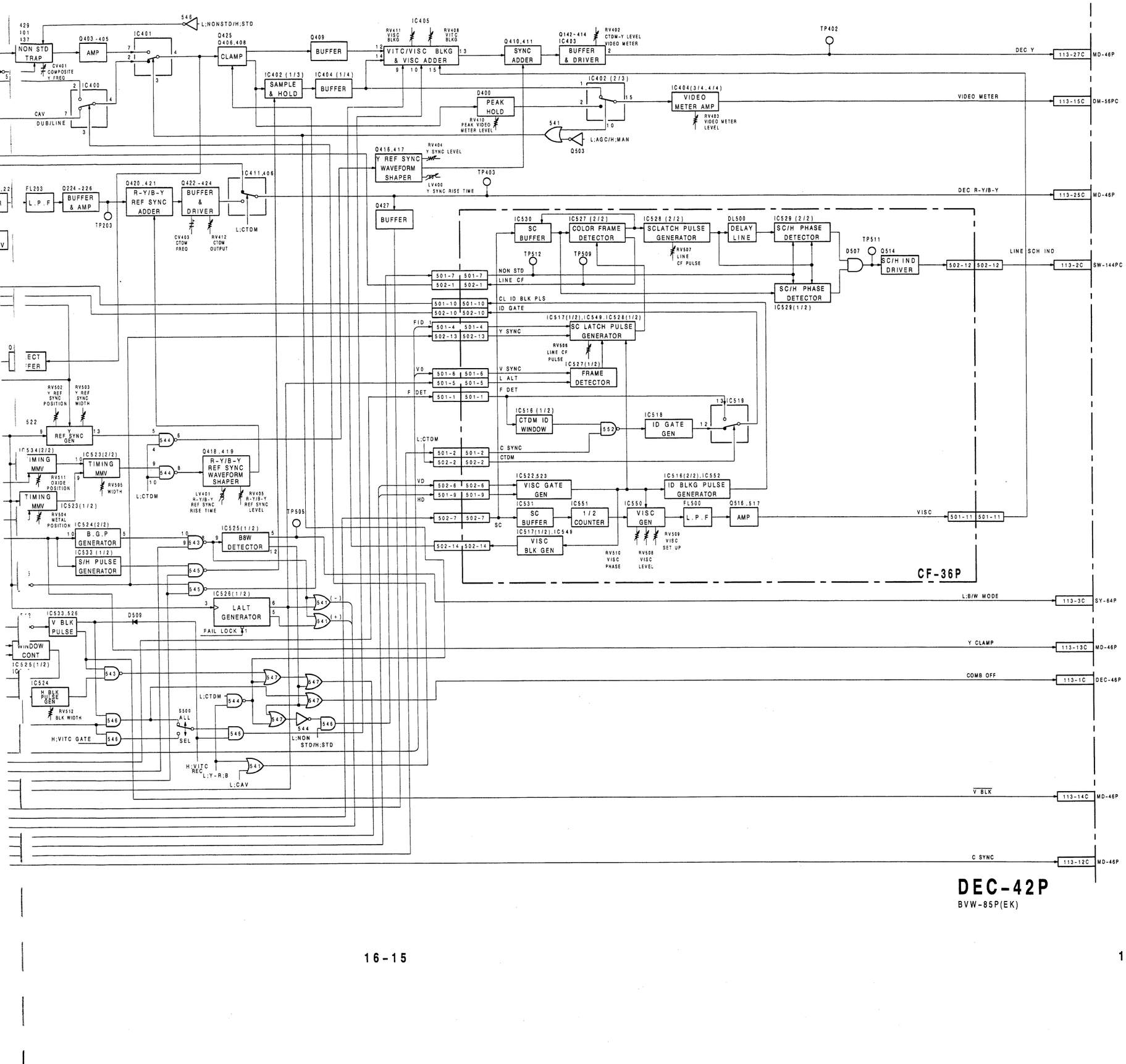

DEC-42P

BVW-85P(EK)

Y/C MOD

Y/C MODULATOR

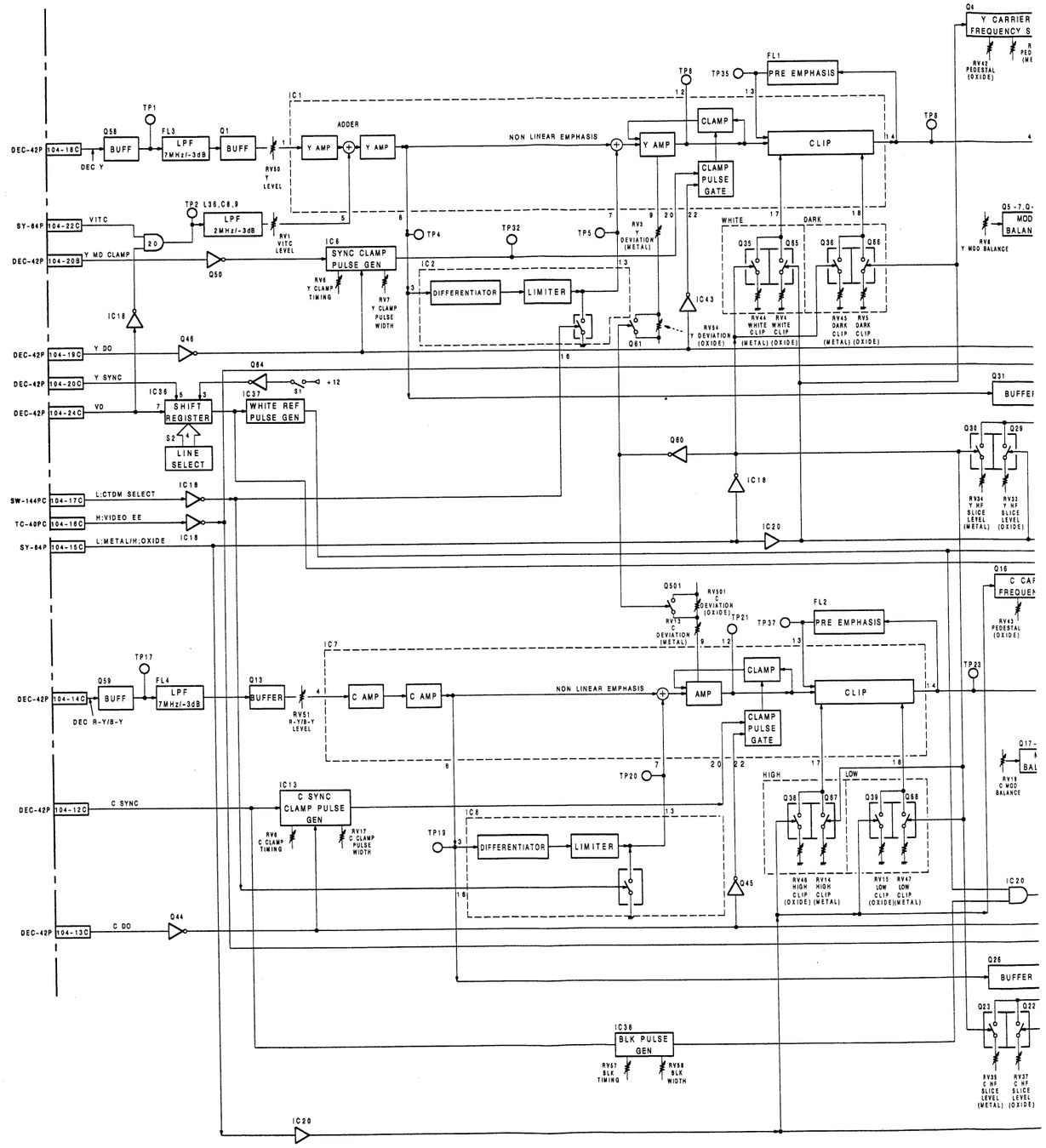

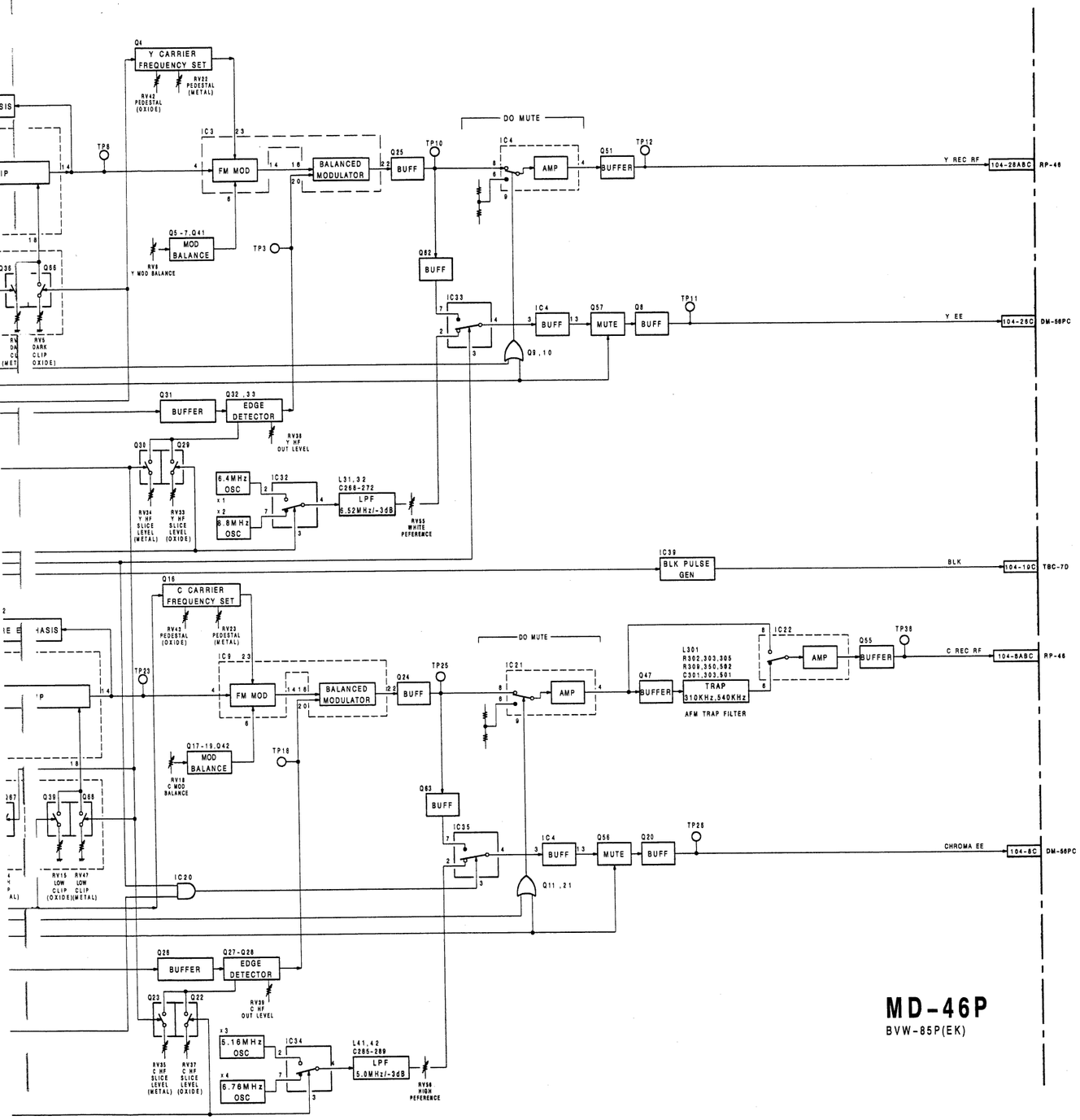

MD-46P
BVW-85P(EK)

Y/C REC/PB AMPLIFIER

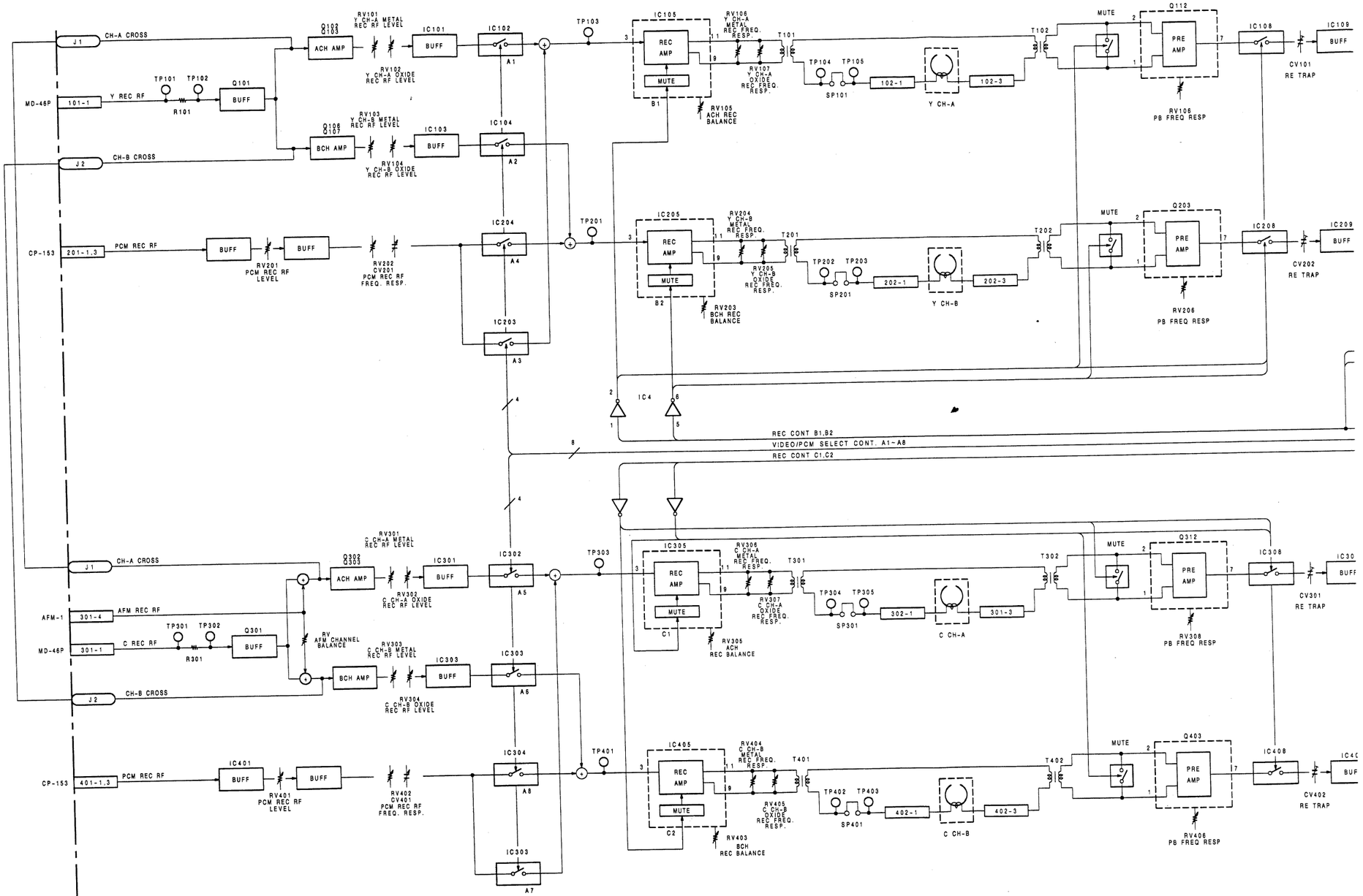

Y/C REC/PB AMP

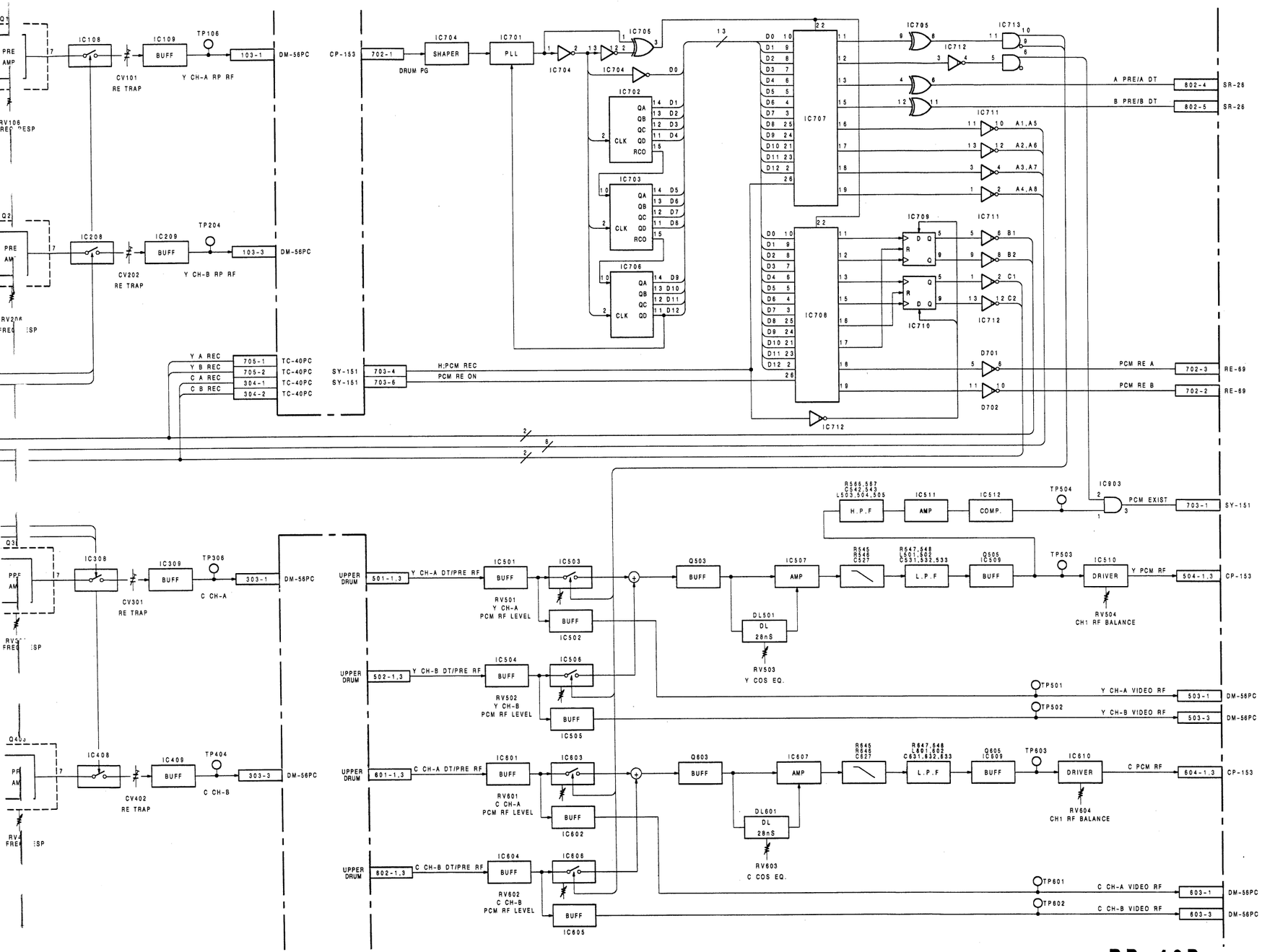

RP-46P
BVW-85P(EK)

Y/C DEMODULATOR

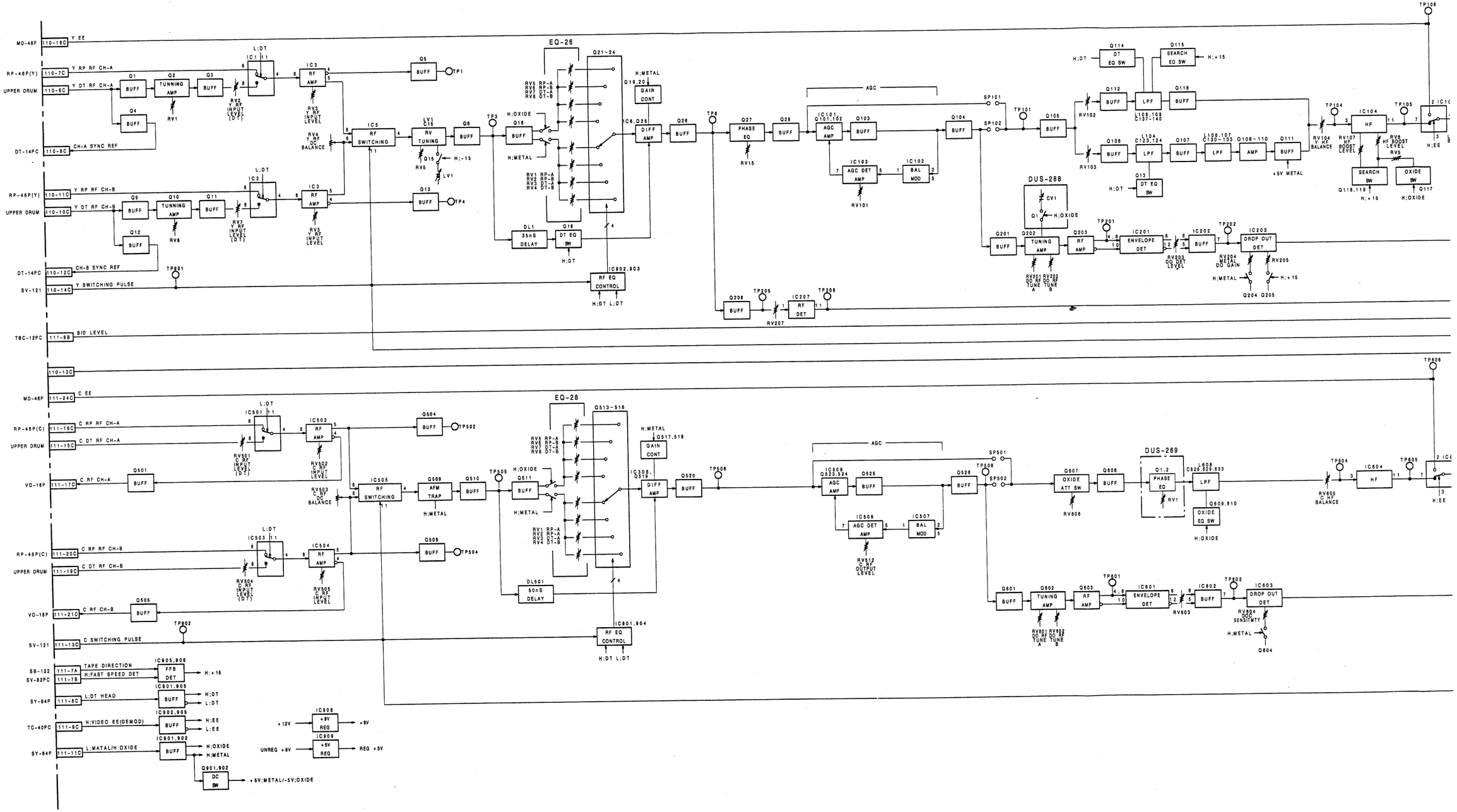

Y/C DEMOD

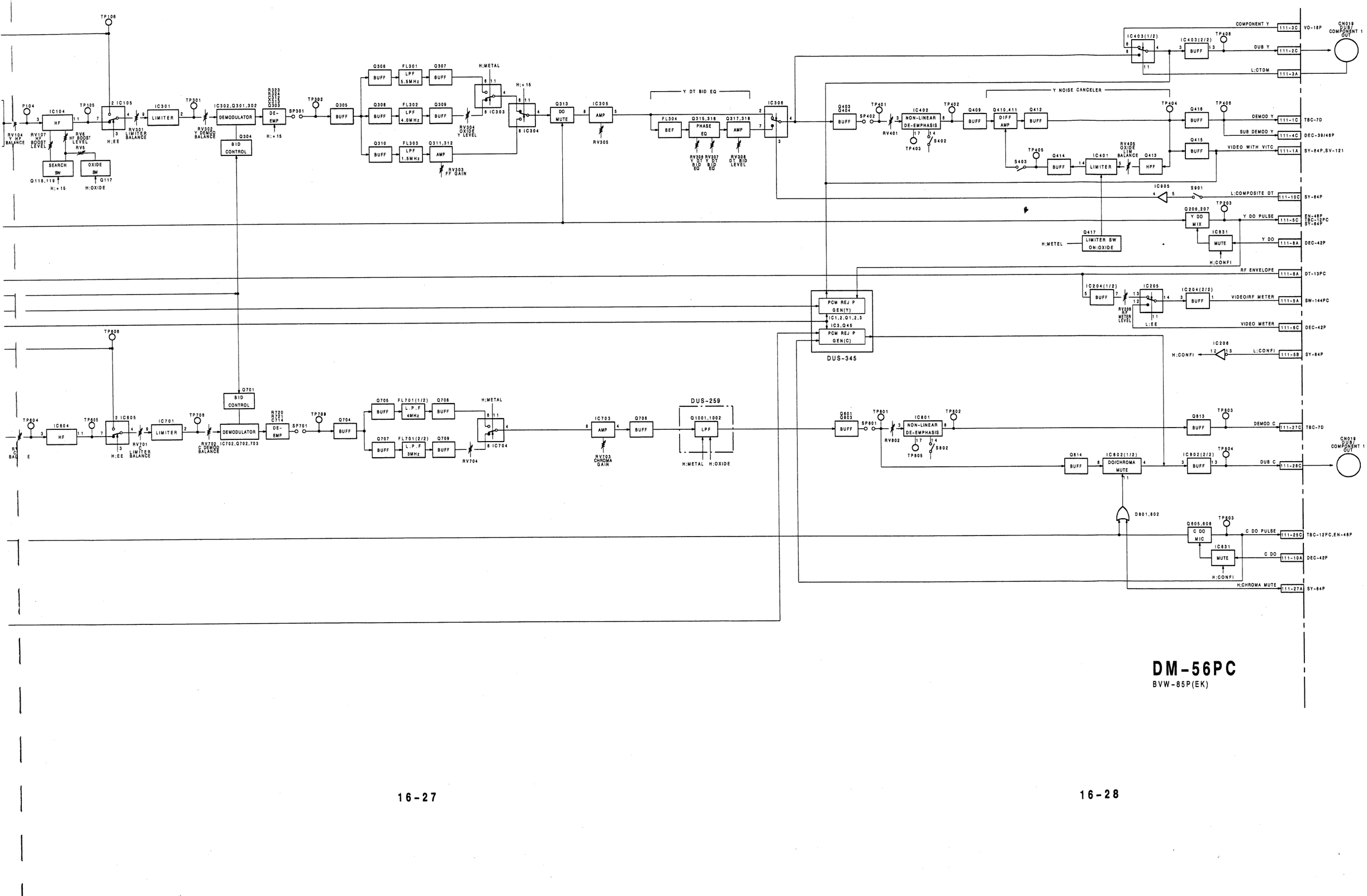

DM-56PC

BVW-85P(EK)

WRITE CLOCK GENERATOR
A/D CONVERTER

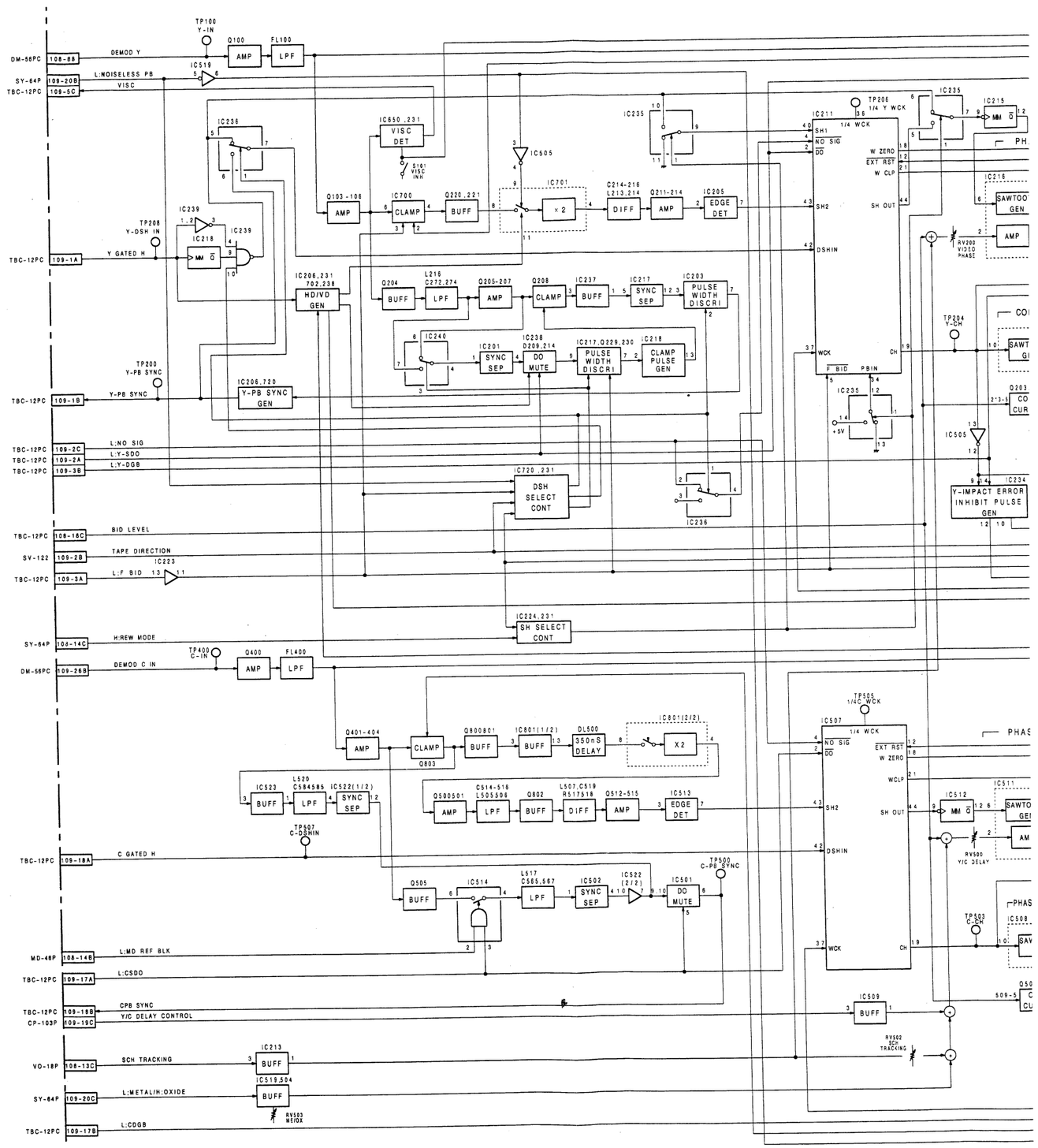

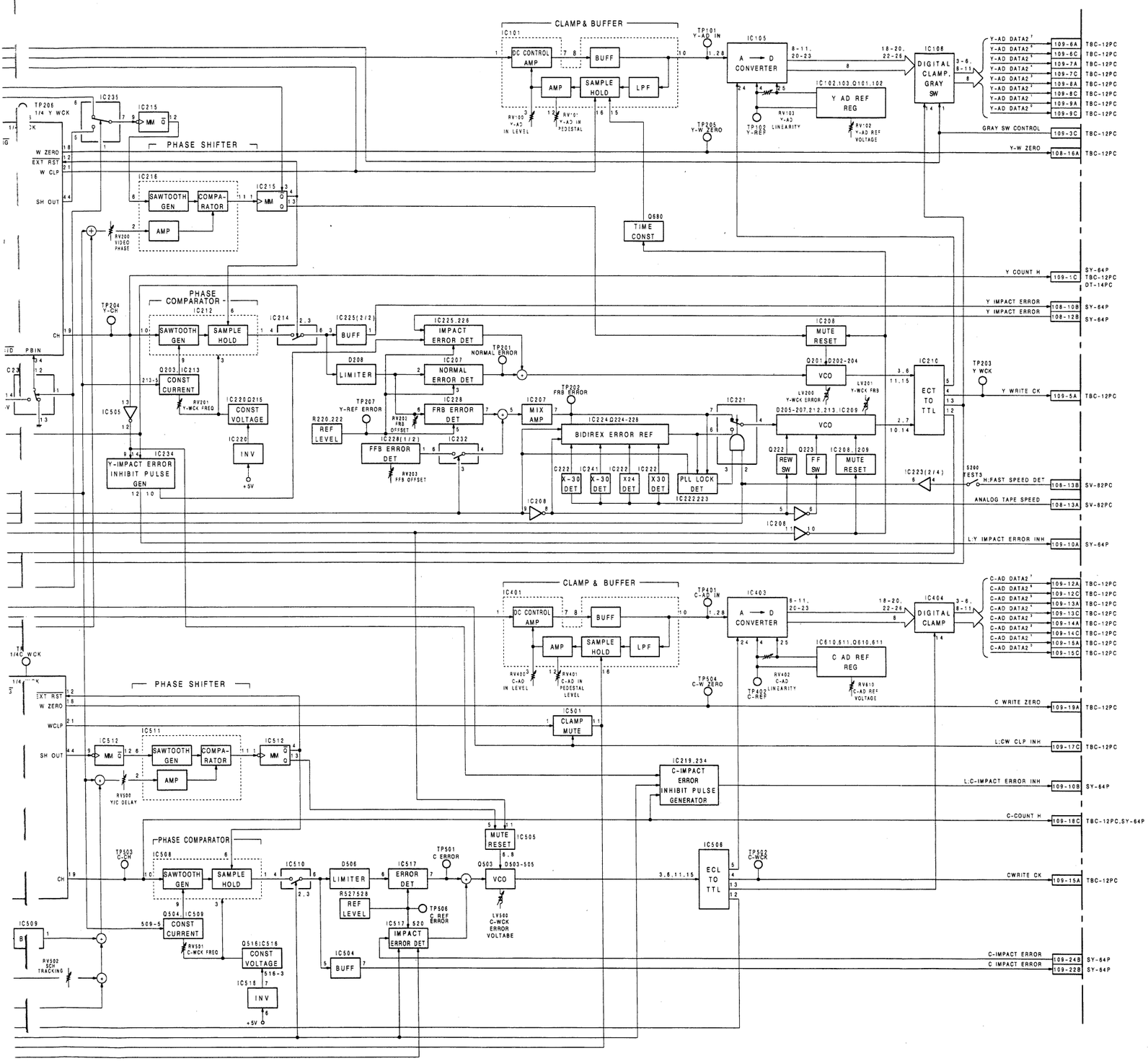

TBC-7D

BVW-85P(EK)

MAIN MEMORY
D/A CONVERTER
Y DIGITAL NOISE REDUCTION

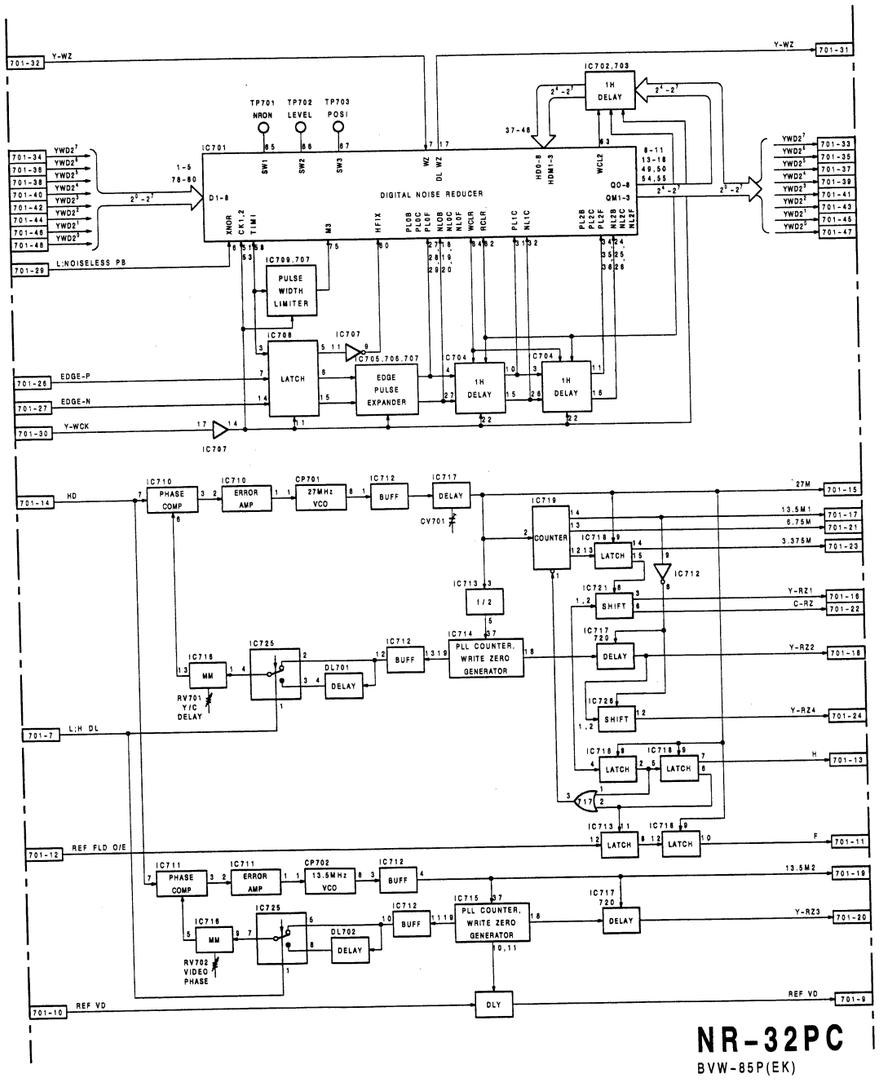

NR-32PC
BVW-85P(EK)

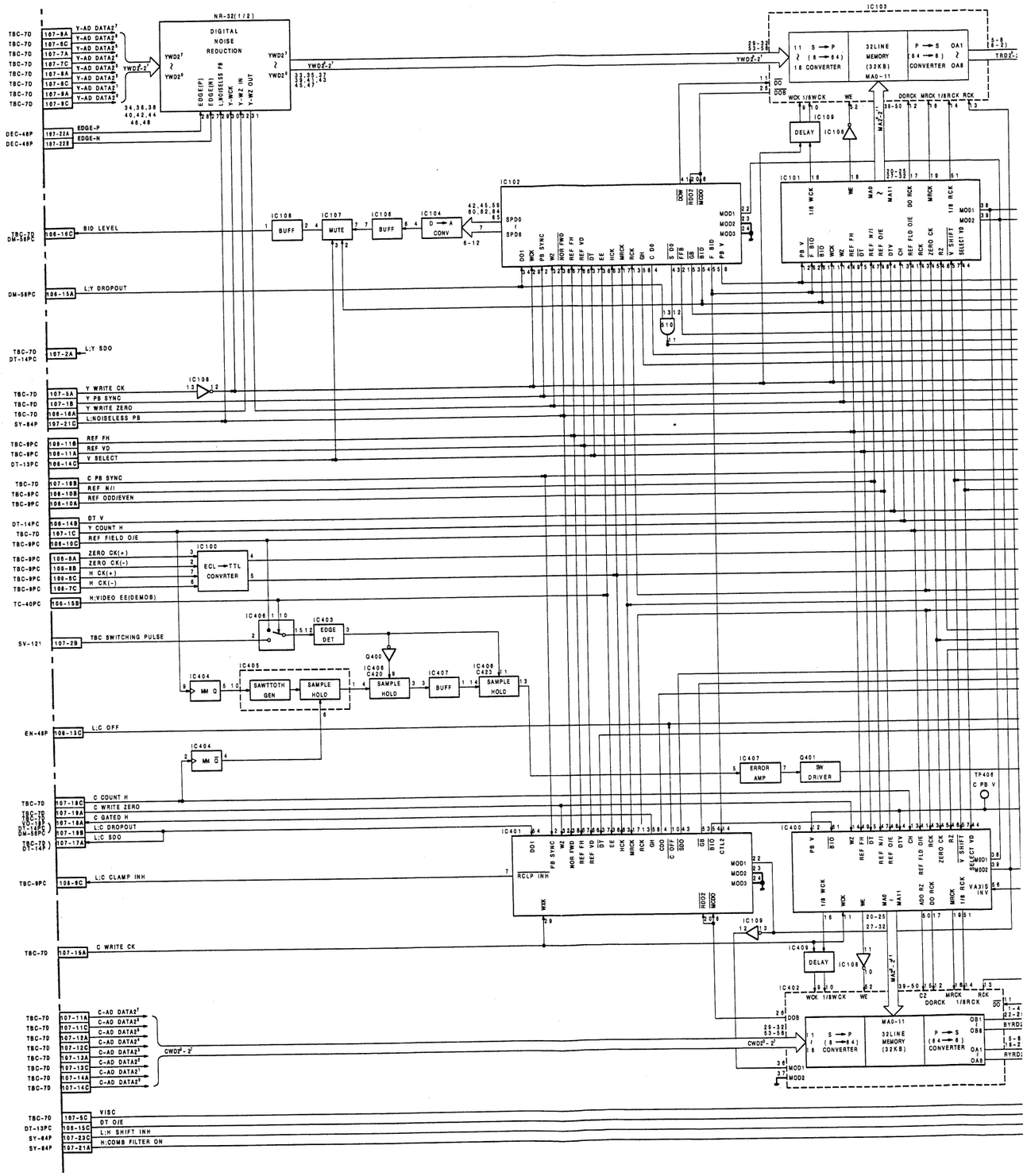

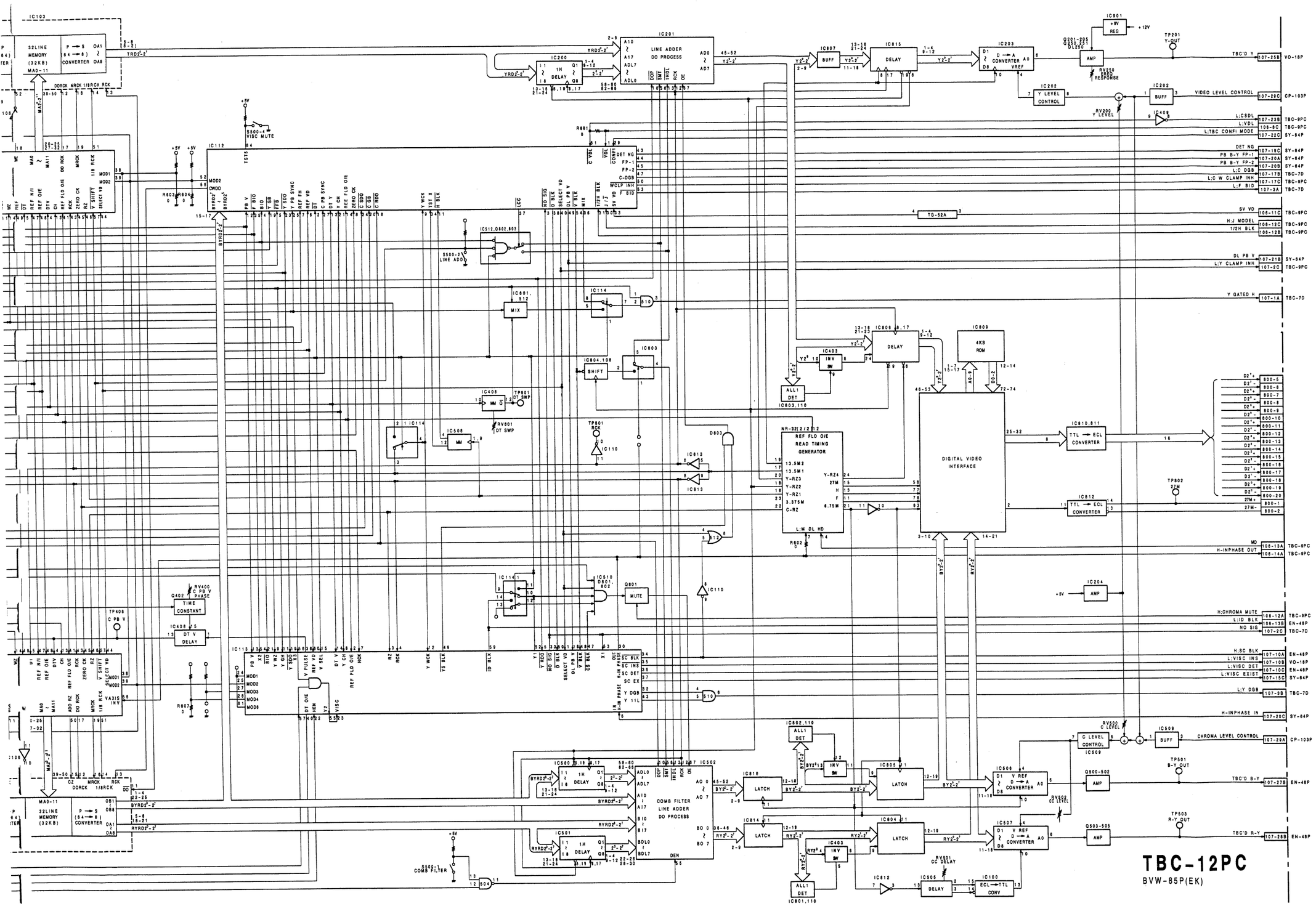

TBC-12PC

BVW-85P(EK)

REF SIGNAL/TIMING GENERATOR

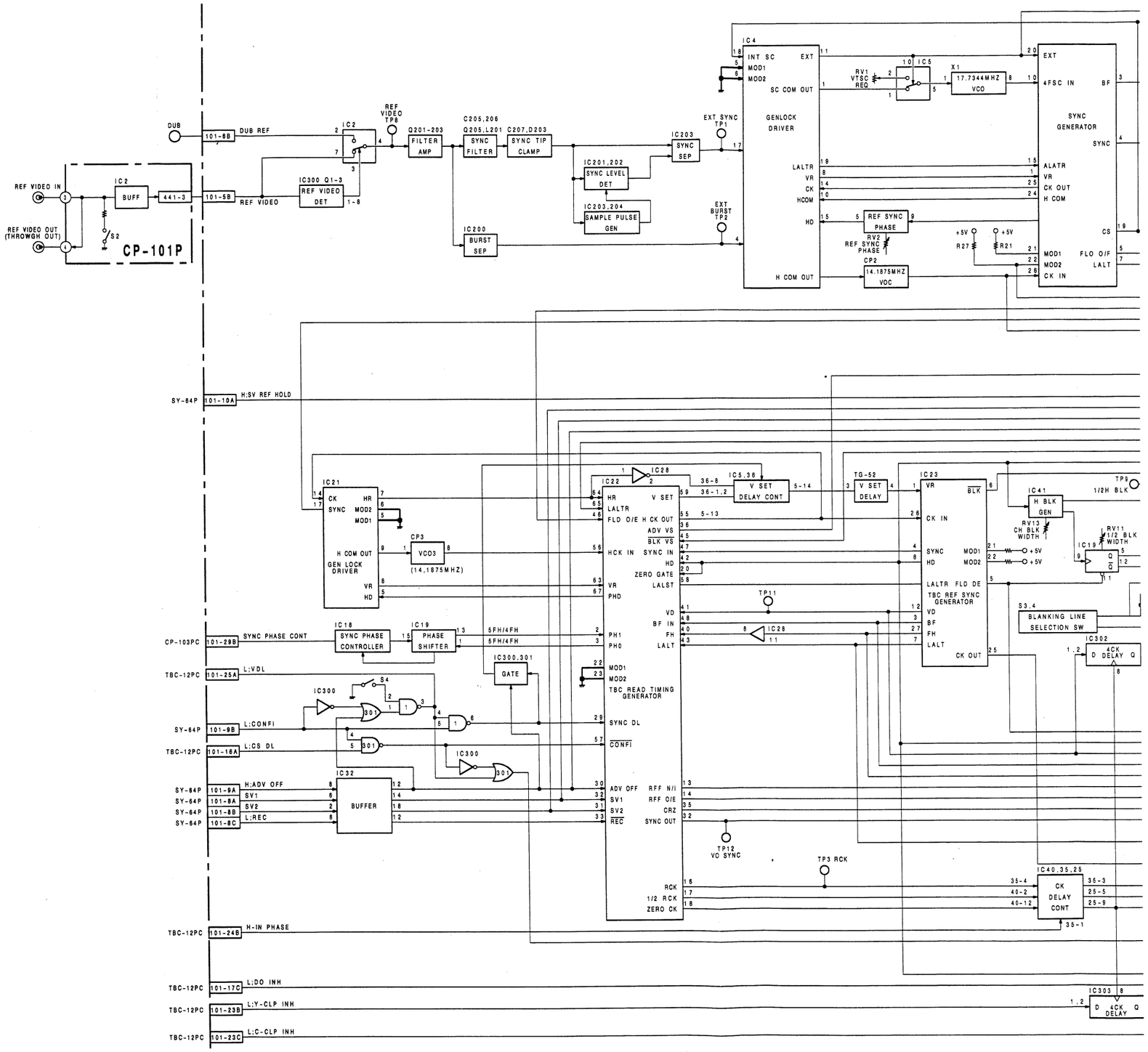

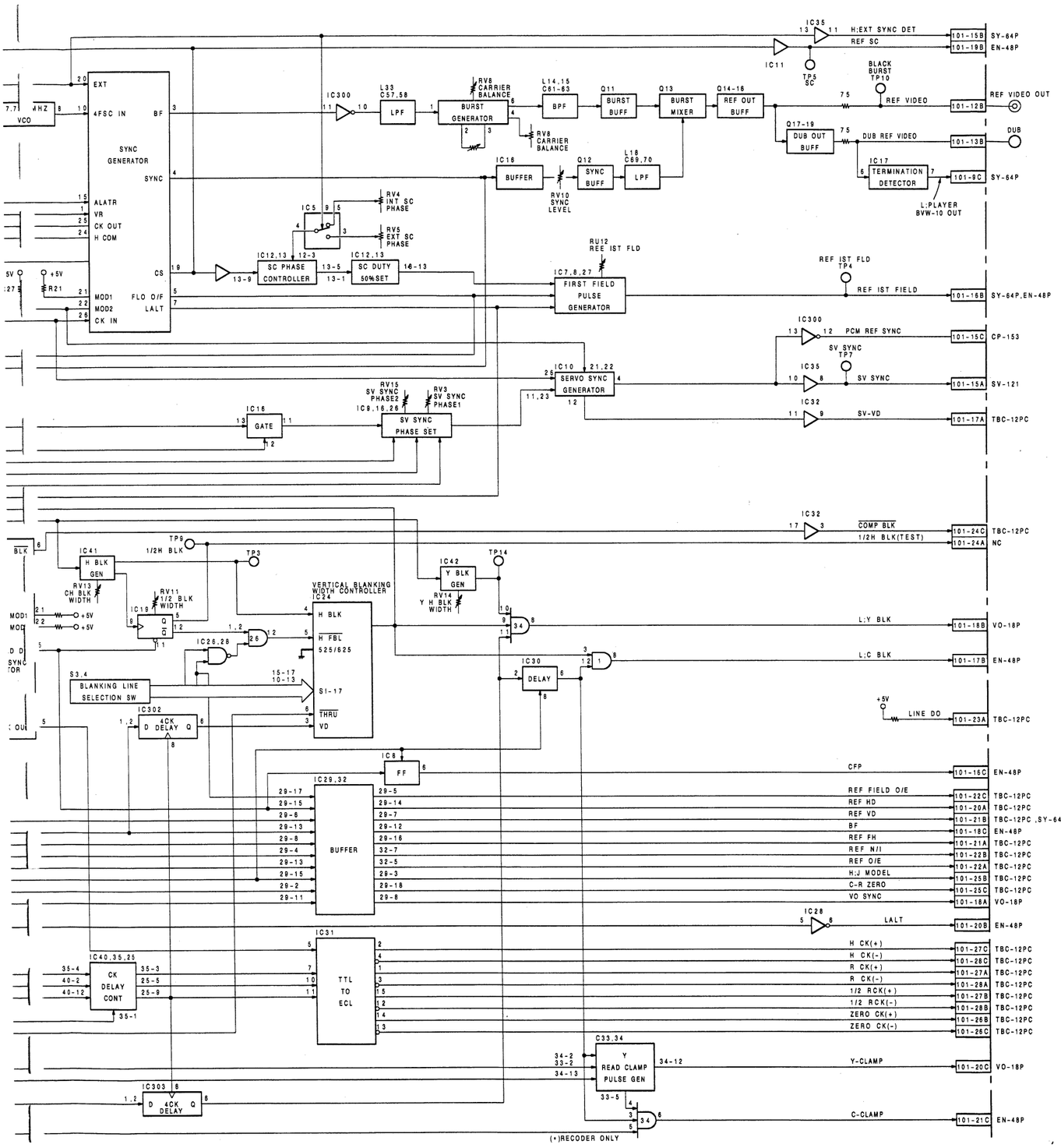

TBC-9PC

BVW-85P(EK)

ENCODER

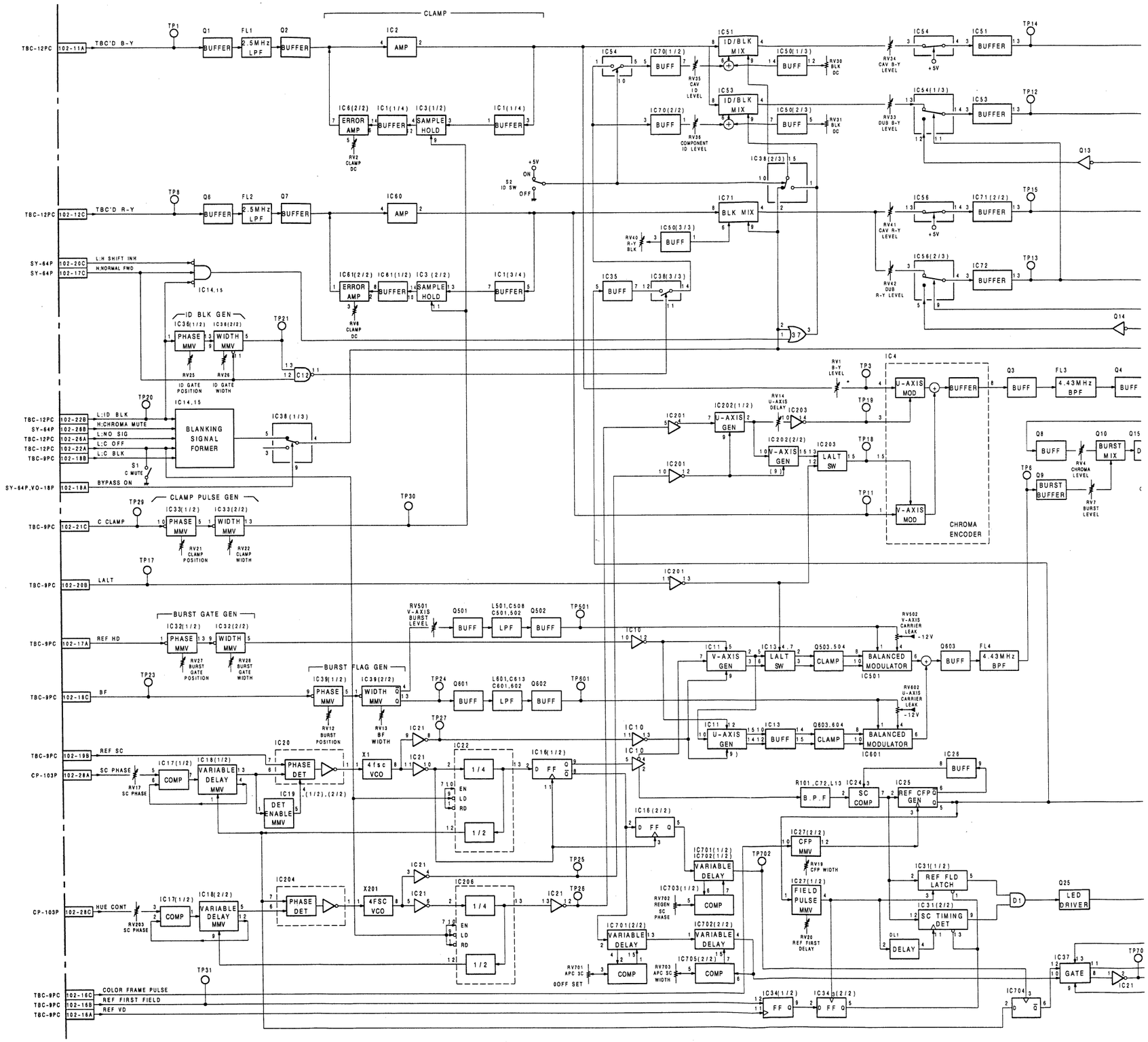
CLAMP
TBC-12PC
102-11A
TBC'D B-Y
Q1
BUFFER
FL1
2.5MHz LPF
Q2
IC2
AMP
IC6(2/2)
ERROR AMP
IC1(1/4)
IC3(1/2)
SAMPLE HOLD
RV2 CLAMP DC
IC54
IC70(1/2)
IC51 ID/BLK MIX
IC50(1/3)
RV30 BLK DC
RV34 CAV B-Y LEVEL
+5V
RV35 CAV ID LEVEL
IC70(2/2)
IC53 ID/BLK MIX
IC50(2/3)
RV31 BLK DC
RV33 DUB B-Y LEVEL
RV36 COMPONENT ID LEVEL
S2 ID SW
ON
OFF
IC38(2/3)
Q13
TBC-12PC
102-12C
TBC'D R-Y
Q8
FL2
Q7
IC60
IC71 BLK MIX
RV40 R-Y BLK
IC56
IC71(2/2)
RV41 CAV R-Y LEVEL
IC56(2/3)
IC72
RV42 DUB R-Y LEVEL
Q14
SY-64P
102-20C
L:H SHIFT INH
SY-64P
102-17C
H:NORMAL FWD
IC14,15
IC61(2/2)
IC61(1/2)
IC3(2/2)
IC1(3/4)
RV8 CLAMP DC
IC35
IC38(3/3)
ID BLK GEN
IC36(1/2)
IC36(2/2)
PHASE MMV
WIDTH MMV
RV25 ID GATE POSITION
RV26 ID GATE WIDTH
TP21
C12
IC4
RV1 B-Y LEVEL
TP3
U-AXIS MOD
BUFFER
Q3
FL3
4.43MHz BPF
Q4
TP20
IC14,15
BLANKING SIGNAL FORMER
IC38(1/3)
TBC-12PC
102-22B
L:ID BLK
SY-64P
102-26B
H:CHROMA MUTE
TBC-12PC
102-26A
L:NO SIG
TBC-12PC
102-22A
L:C OFF
TBC-9PC
102-18B
L:C BLK
S1 C MUTE
SY-64P,VO-18P
102-18A
BYPASS ON
IC201
IC202(1/2)
U-AXIS GEN
RV14 U-AXIS DELAY
IC203
IC202(2/2)
V-AXIS GEN
(9)
IC203 LALT SW
TP19
TP18
TP11
V-AXIS MOD
CHROMA ENCODER
Q8
BUFF
Q10
BURST MIX
Q15
TP6
Q9
BURST BUFFER
RV4 CHROMA LEVEL
RV7 BURST LEVEL
CLAMP PULSE GEN
TP29
IC33(1/2)
IC33(2/2)
PHASE MMV
WIDTH MMV
RV21 CLAMP POSITION
RV22 CLAMP WIDTH
TP30
TBC-9PC
102-21C
C CLAMP
TP17
TBC-9PC
102-20B
LALT
BURST GATE GEN
IC32(1/2)
IC32(2/2)
TBC-9PC
102-17A
REF HD
RV27 BURST GATE POSITION
RV28 BURST GATE WIDTH
RV501 V-AXIS BURST LEVEL
Q501
L501,C508 C501,502
Q502
TP501
IC10
IC11 V-AXIS GEN
IC13 LALT SW
Q503,504 CLAMP
BALANCED MODULATOR
IC501
RV502 V-AXIS CARRIER LEAK
-12V
Q603
FL4
4.43MHz BPF
BURST FLAG GEN
IC39(1/2)
IC39(2/2)
TP23
TBC-9PC
102-18C
BF
TP24
Q601
L601,C613 C601,602
Q602
TP601
RV12 BURST POSITION
RV13 BF WIDTH
TP27
IC11 U-AXIS GEN
IC13 BUFF
Q803,604 CLAMP
BALANCED MODULATOR
IC601
RV602 U-AXIS CARRIER LEAK
TBC-9PC
102-19B
REF SC
CP-103P
102-28A
SC PHASE
IC17(1/2)
IC18(1/2)
COMP
VARIABLE DELAY MMV
RV17 SC PHASE
IC20
PHASE DET
IC19
DET ENABLE MMV
X1
4fsc VCO
IC21
IC22
1/4
1/2
EN
LD
RD
IC16(1/2)
D FF
IC18(2/2)
IC26
BUFF
R101,C72,L13
B.P.F
IC24
SC COMP
IC25
REF CFP GEN
IC27(2/2)
CFP MMV
RV19 CFP WIDTH
IC27(1/2)
FIELD PULSE MMV
RV20 REF FIRST DELAY
IC31(1/2)
REF FLD LATCH
IC31(2/2)
SC TIMING DET
D1
Q25
LED DRIVER
DL1
DELAY
IC37
GATE
IC21
TP70
IC704
CP-103P
102-28C
HUE CONT
RV203 SC PHASE
IC17(1/2)
IC18(2/2)
COMP
VARIABLE DELAY MMV
IC204
PHASE DET
X201
4FSC VCO
IC21
IC206
1/4
1/2
EN
LD
RD
IC21
TP25
TP26
IC701(1/2)
IC702(1/2)
VARIABLE DELAY
RV702 REGEN SC PHASE
IC703(1/2)
COMP
TP702
IC701(2/2)
VARIABLE DELAY
IC702(2/2)
VARIABLE DELAY
RV701 APC 3C 0OFF SET
COMP
RV703 APC SC WIDTH
IC705(2/2)
COMP
TP31
TBC-9PC
102-16C
COLOR FRAME PULSE
TBC-9PC
102-16B
REF FIRST FIELD
TBC-9PC
102-16A
REF VD
IC34(1/2)
FF Q
IC34(2/2)
D FF Q

ENCODER

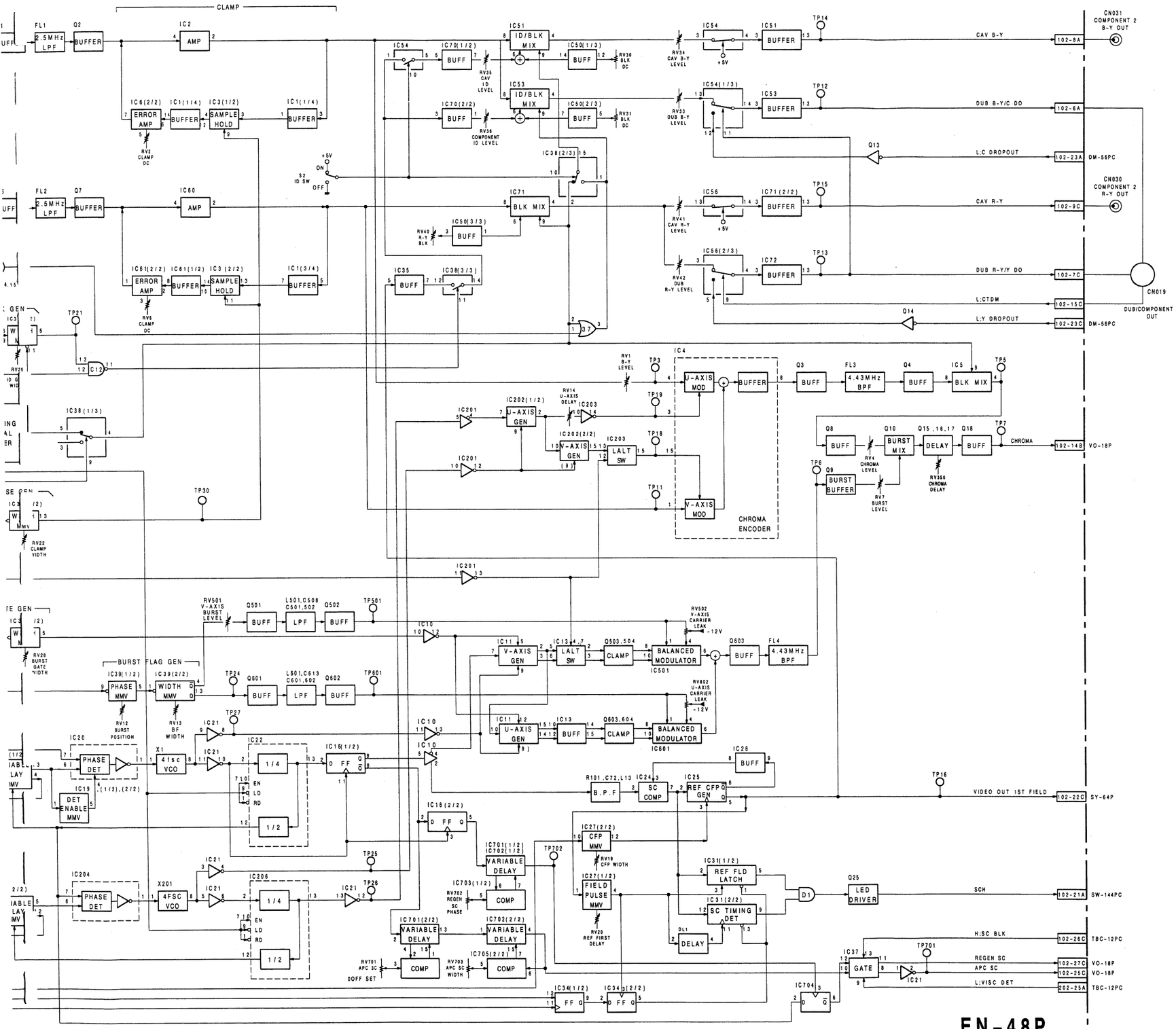

EN-48P

BVW-85P(EK)

VIDEO OUTPUT

VIDEO OUTPUT
AGC FOR AFM

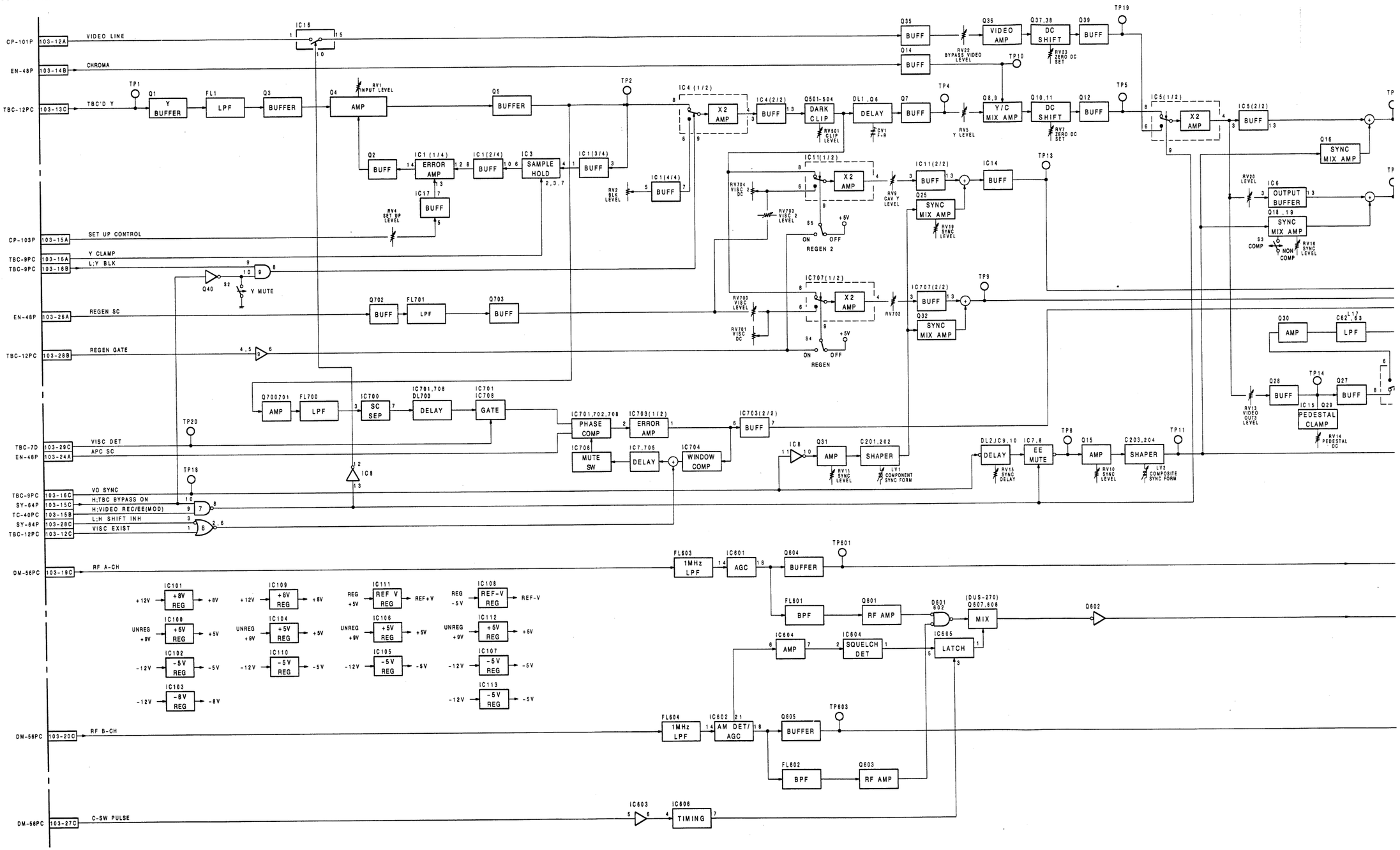

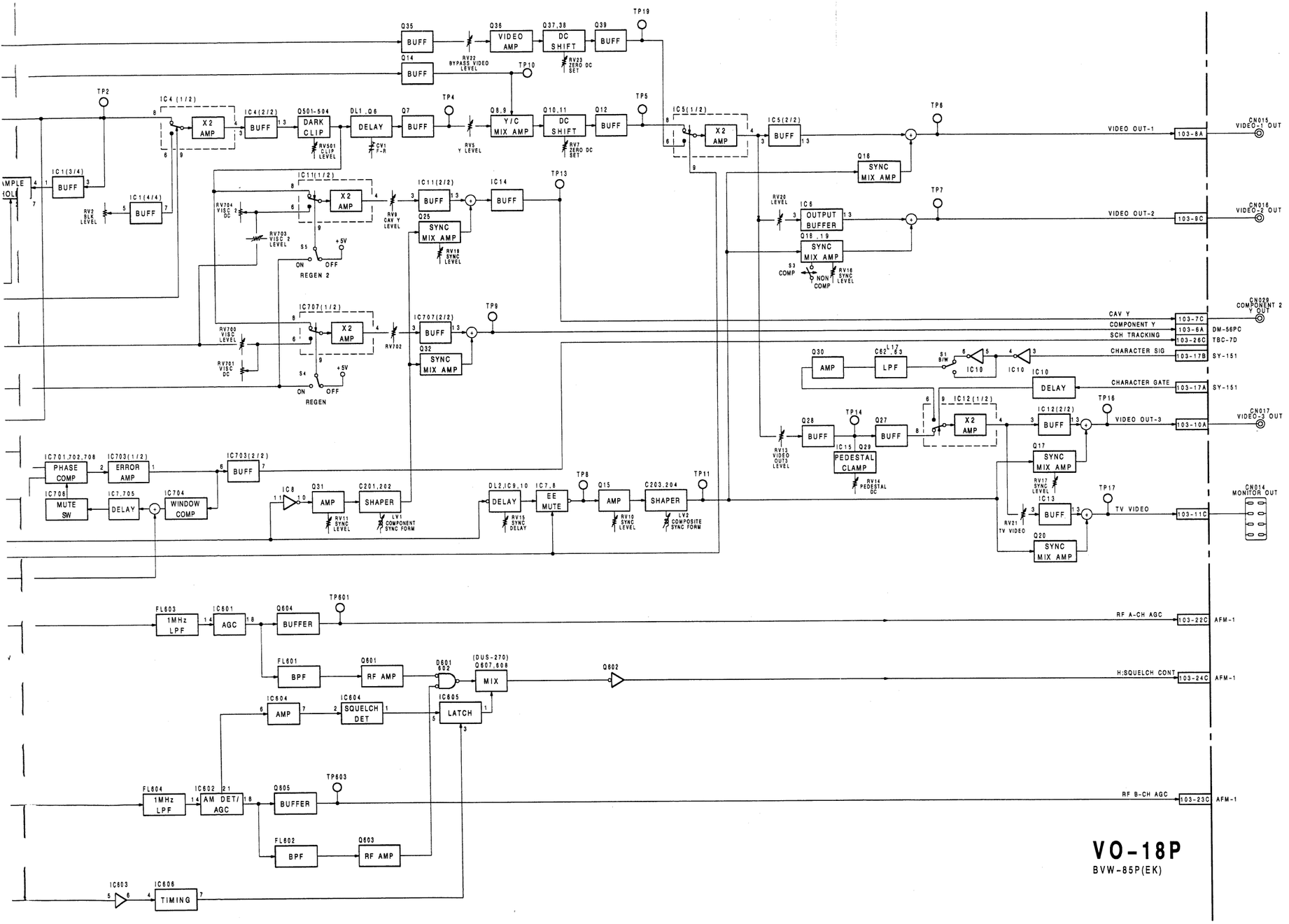

VO-18P
BVW-85P(EK)

LNG AUDIO

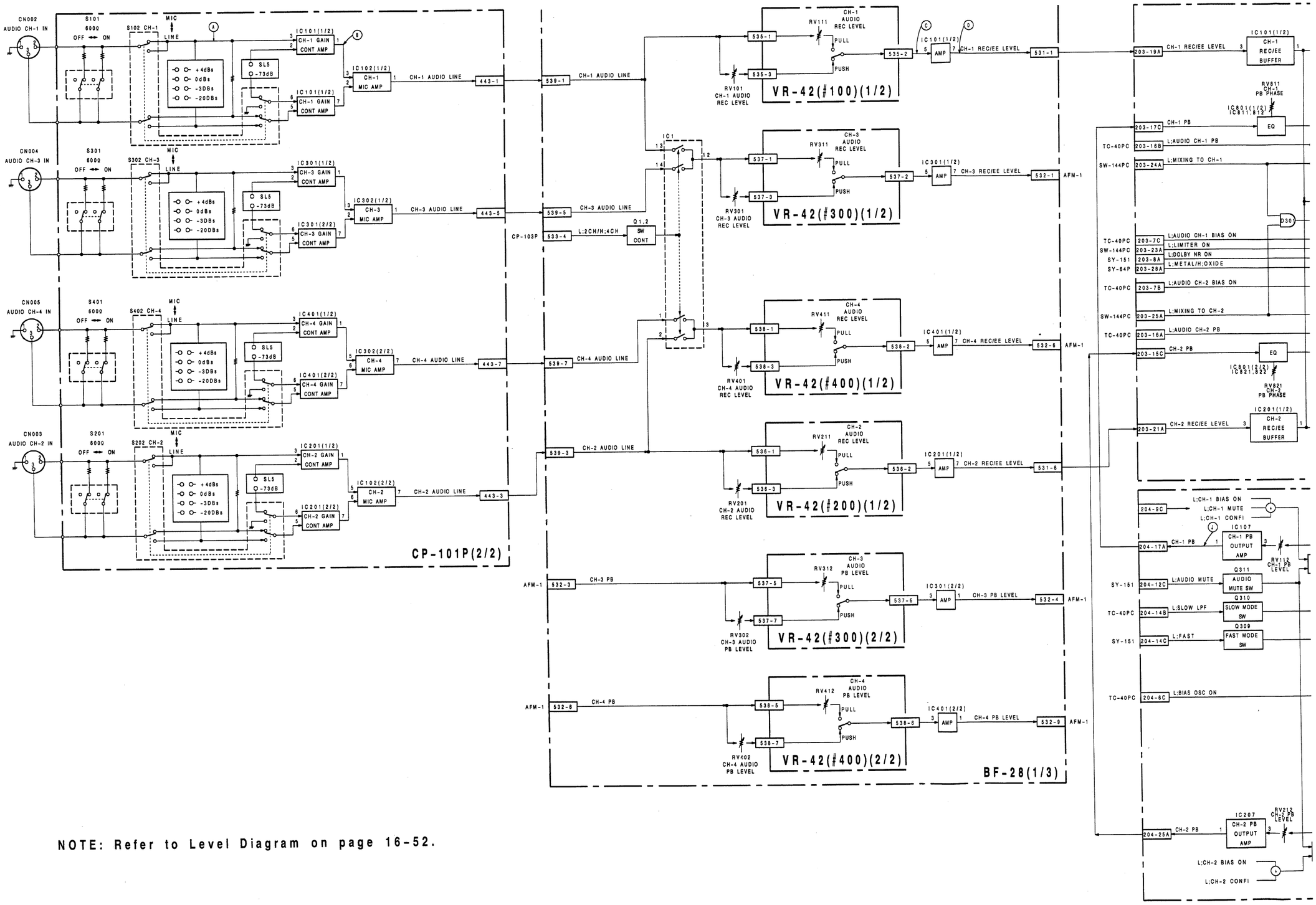

NOTE: Refer to Level Diagram on page 16-52.

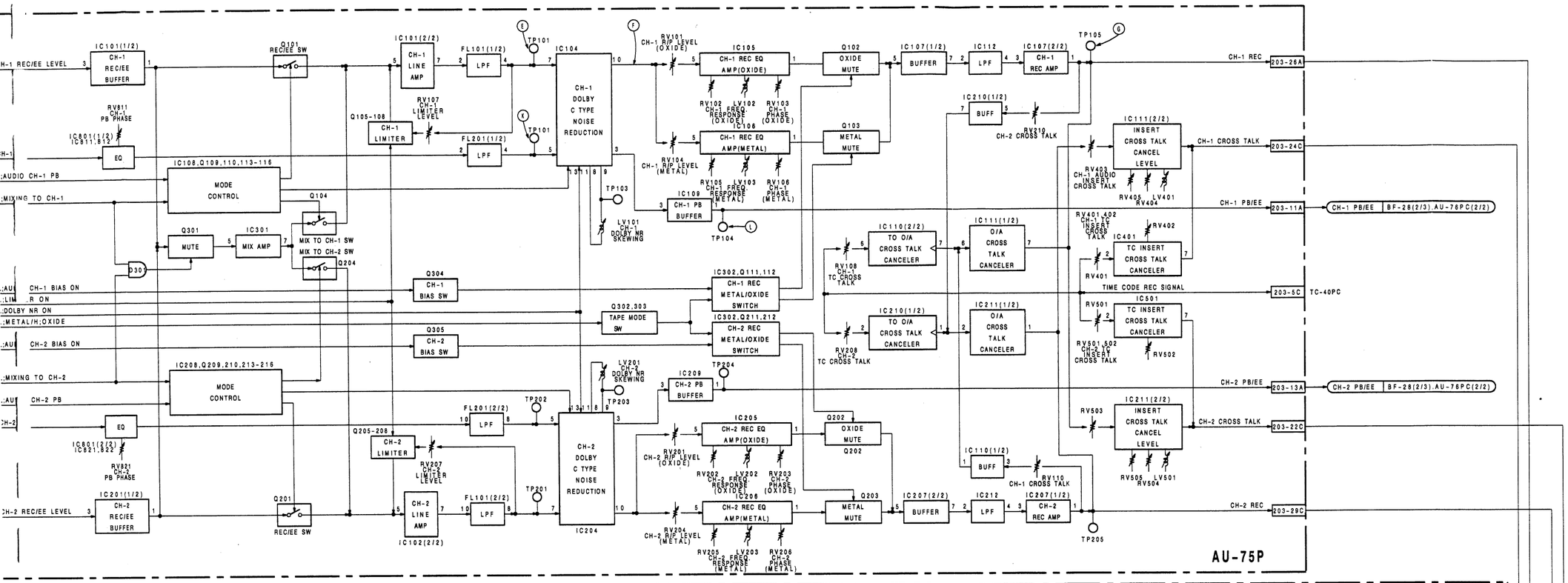

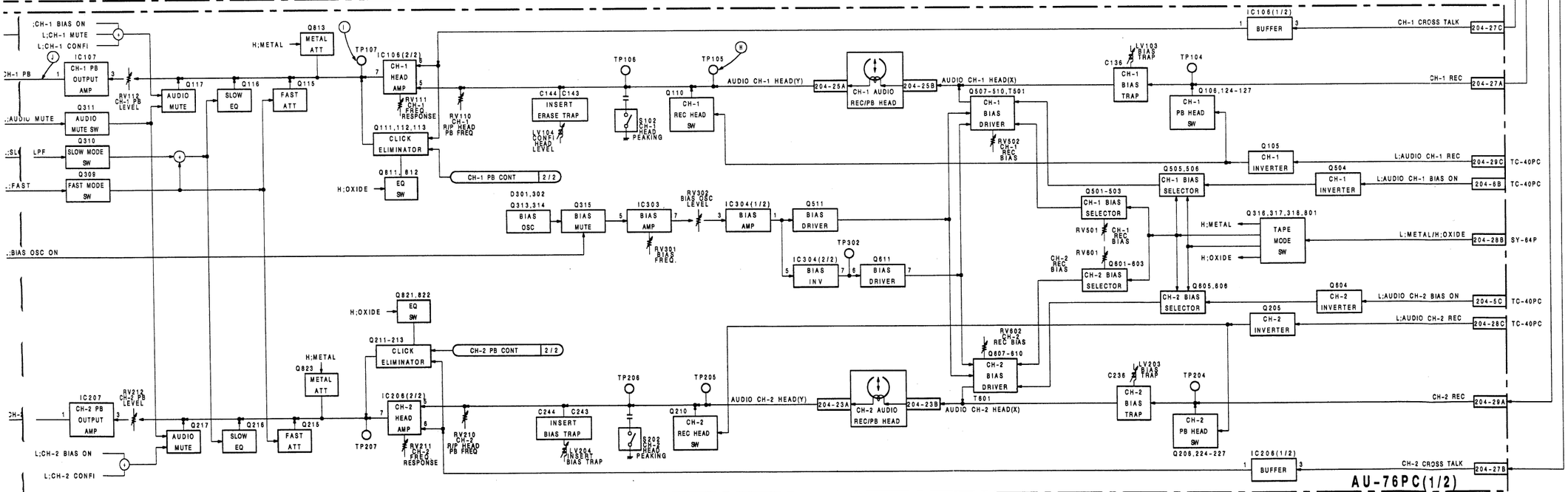

LNG AUDIO(1/2)

BVW-85P(EK)

LNG AUDIO

LNG AUDIO

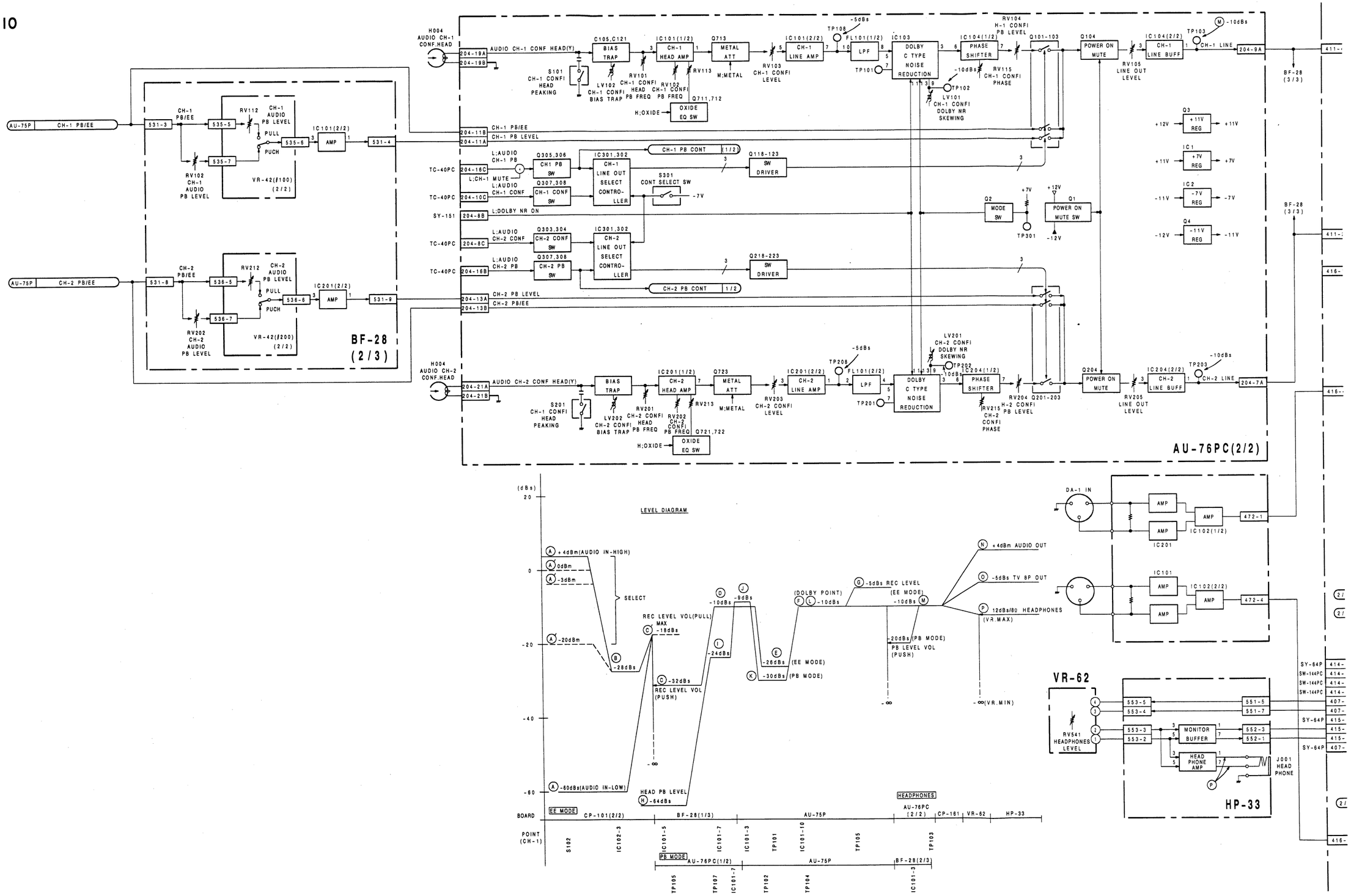

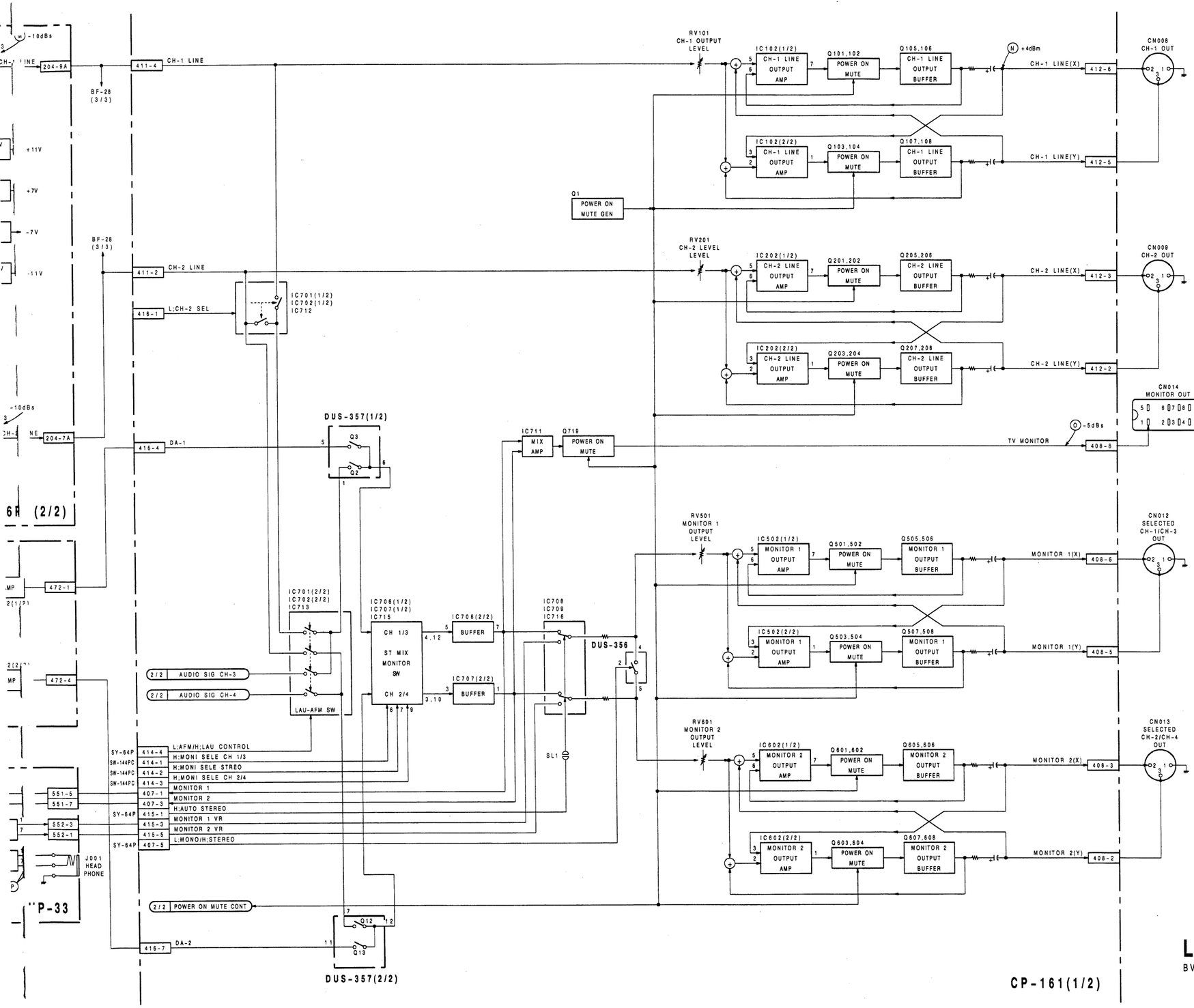

LNG AUDIO(2/2)

BVW-85P(EK)

AFM AUDIO

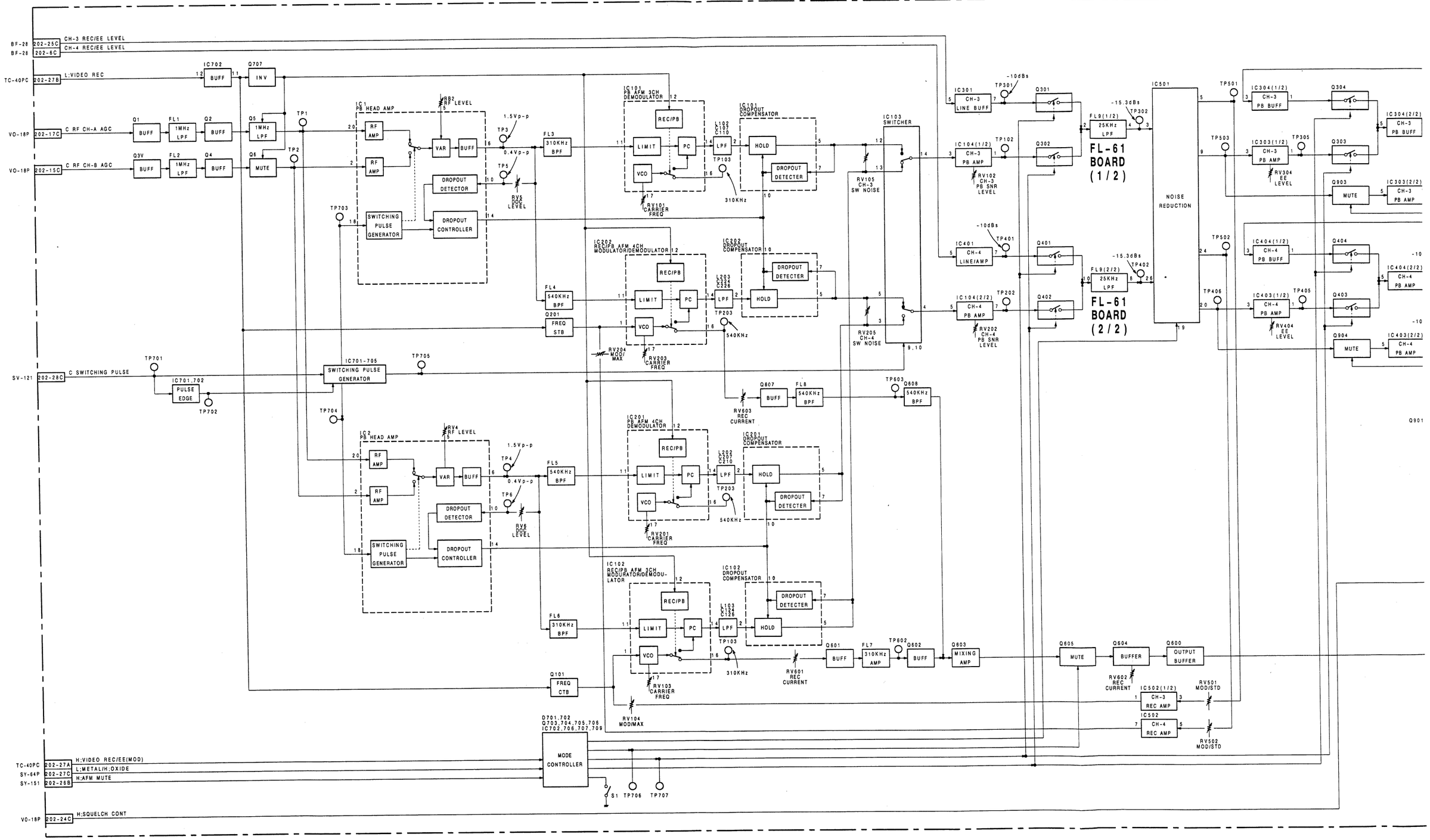
BF-28 202-25C CH-3 REC/EE LEVEL
BF-28 202-6C CH-4 REC/EE LEVEL
TC-40PC 202-27B L:VIDEO REC
VO-18P 202-17C C RF CH-A AGC
VO-18P 202-15C C RF CH-B AGC
SV-121 202-28C C SWITCHING PULSE
TC-40PC 202-27A H:VIDEO REC/EE(MOD)
SY-64P 202-27C L:METAL/H:OXIDE
SY-151 202-26B H:AFM MUTE
V0-18P 202-24C H:SQUELCH CONT
IC702 BUFF
Q707 INV
Q1 BUFF
FL1 1MHz LPF
Q2 BUFF
Q5 1MHz LPF
Q6 MUTE
Q3V BUFF
FL2 1MHz LPF
Q4 BUFF
TP1
TP2
IC1 PB HEAD AMP
RF AMP
RF AMP
VAR
BUFF
RB2 RF LEVEL
DROPOUT DETECTOR
DROPOUT CONTROLLER
SWITCHING PULSE GENERATOR
TP3
1.5Vp-p
0.4Vp-p
TP5
RV5 DOC LEVEL
FL3 310KHz BPF
FL4 540KHz BPF
Q201 FREQ STB
TP703
IC101 PB AFM 3CH DEMODULATOR
IC202 REC/PB AFM 4CH MODULATOR/DEMODULATOR
REC/PB
LIMIT
PC
VCO
LPF
HOLD
DROPOUT DETECTER
L102 C107 C110
L203 C224 C226
TP103
TP203
310KHz
540KHz
RV101 CARRIER FREQ
RV204 MOD/MAX
RV203 CARRIER FREQ
IC101 DROPOUT COMPENSATOR
IC202 DROPOUT COMPENSATOR
IC103 SWITCHER
RV105 CH-3 SW NOISE
RV205 CH-4 SW NOISE
IC301 CH-3 LINE BUFF
IC401 CH-4 LINE/AMP
IC104(1/2) CH-3 PB AMP
IC104(2/2) CH-4 PB AMP
RV102 CH-3 PB SNR LEVEL
RV202 CH-4 PB SNR LEVEL
-10dBs
TP301
TP401
TP102
TP202
Q301
Q302
Q401
Q402
FL9(1/2) 25KHz LPF
FL9(2/2) 25KHz LPF
-15.3dBs
TP302
TP402
FL-61 BOARD (1/2)
FL-61 BOARD (2/2)
IC501 NOISE REDUCTION
TP501
TP502
TP503
TP405
TP406
IC304(1/2) CH-3 PB BUFF
IC303(1/2) CH-3 PB AMP
IC404(1/2) CH-4 PB BUFF
IC403(1/2) CH-4 PB AMP
RV304 EE LEVEL
RV404 EE LEVEL
TP305
Q304
Q303
Q903
Q404
Q403
Q904
MUTE
IC304(2/2) CH-3 PB BUFF
IC303(2/2) CH-3 PB AMP
IC404(2/2) CH-4 PB AMP
IC403(2/2) CH-4 PB AMP
Q901
TP701
IC701,702 PULSE EDGE
TP702
IC701-705 SWITCHING PULSE GENERATOR
TP705
TP704
IC2 PB HEAD AMP
RV4 RF LEVEL
TP4
TP6
RV6 DOC LEVEL
FL5 540KHz BPF
FL6 310KHz BPF
IC201 PB AFM 4CH DEMODULATOR
IC102 REC/PB AFM 3CH MODURATOR/DEMODU-LATOR
L202 C207 C210
L103 C124 C126
RV201 CARRIER FREQ
RV103 CARRIER FREQ
RV104 MOD/MAX
IC201 DROPOUT COMPENSATOR
IC102 DROPOUT COMPENSATOR
Q101 FREQ CTB
TP603
Q607 BUFF
FL8 540KHz BPF
Q608 540KHz BPF
RV603 REC CURRENT
Q601 BUFF
FL7 310KHz AMP
TP602
Q602 BUFF
Q603 MIXING AMP
RV601 REC CURRENT
Q605 MUTE
Q604 BUFFER
Q600 OUTPUT BUFFER
RV602 REC CURRENT
IC502(1/2) CH-3 REC AMP
IC502 CH-4 REC AMP
RV501 MOD/STD
RV502 MOD/STD
D701,702 Q703,704,705,706 IC702,706,707,709
MODE CONTROLLER
S1 TP706 TP707

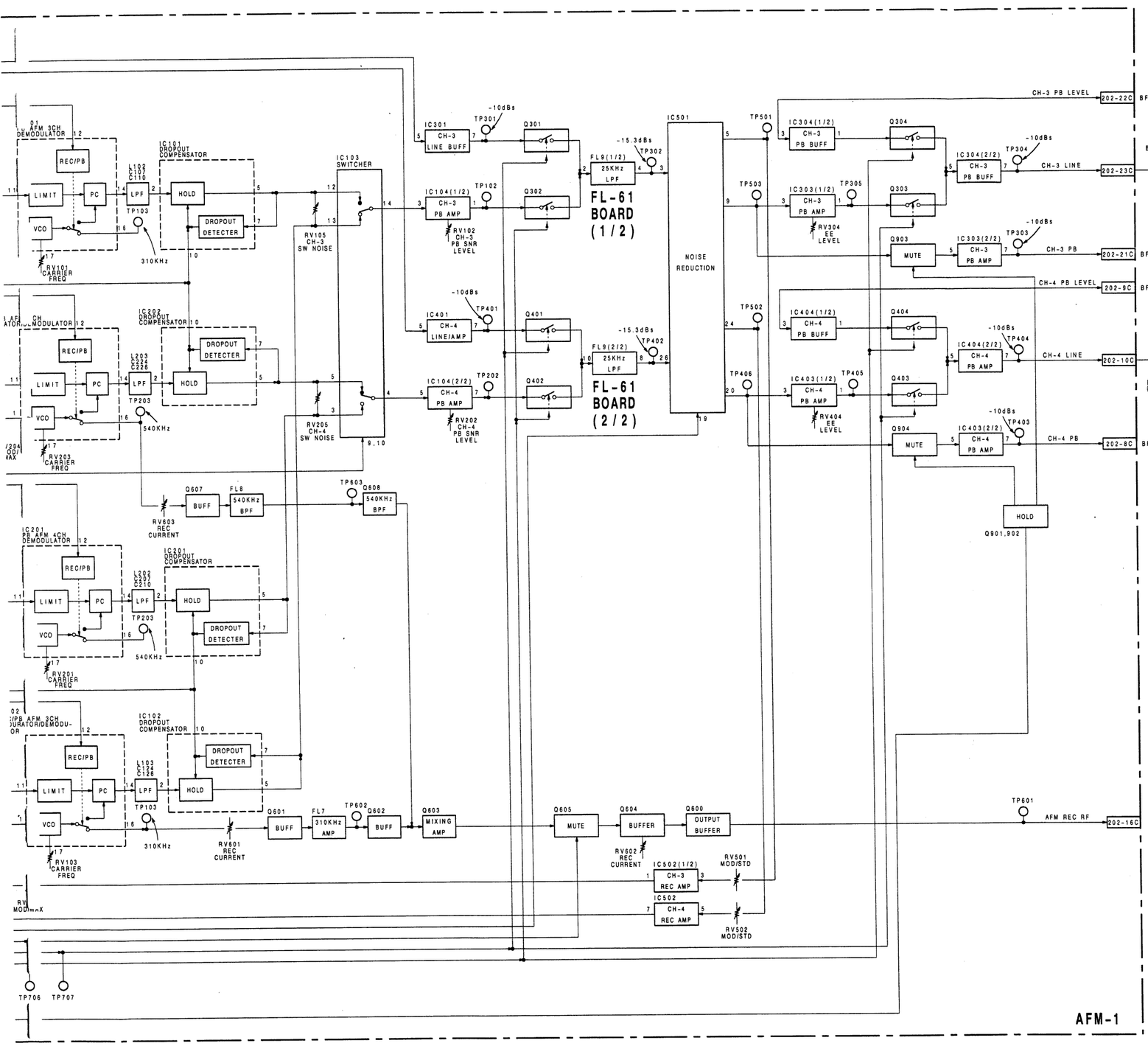

AFM AUDIO

BVW-85P(EK)

AUDIO METER

AUDIO METER

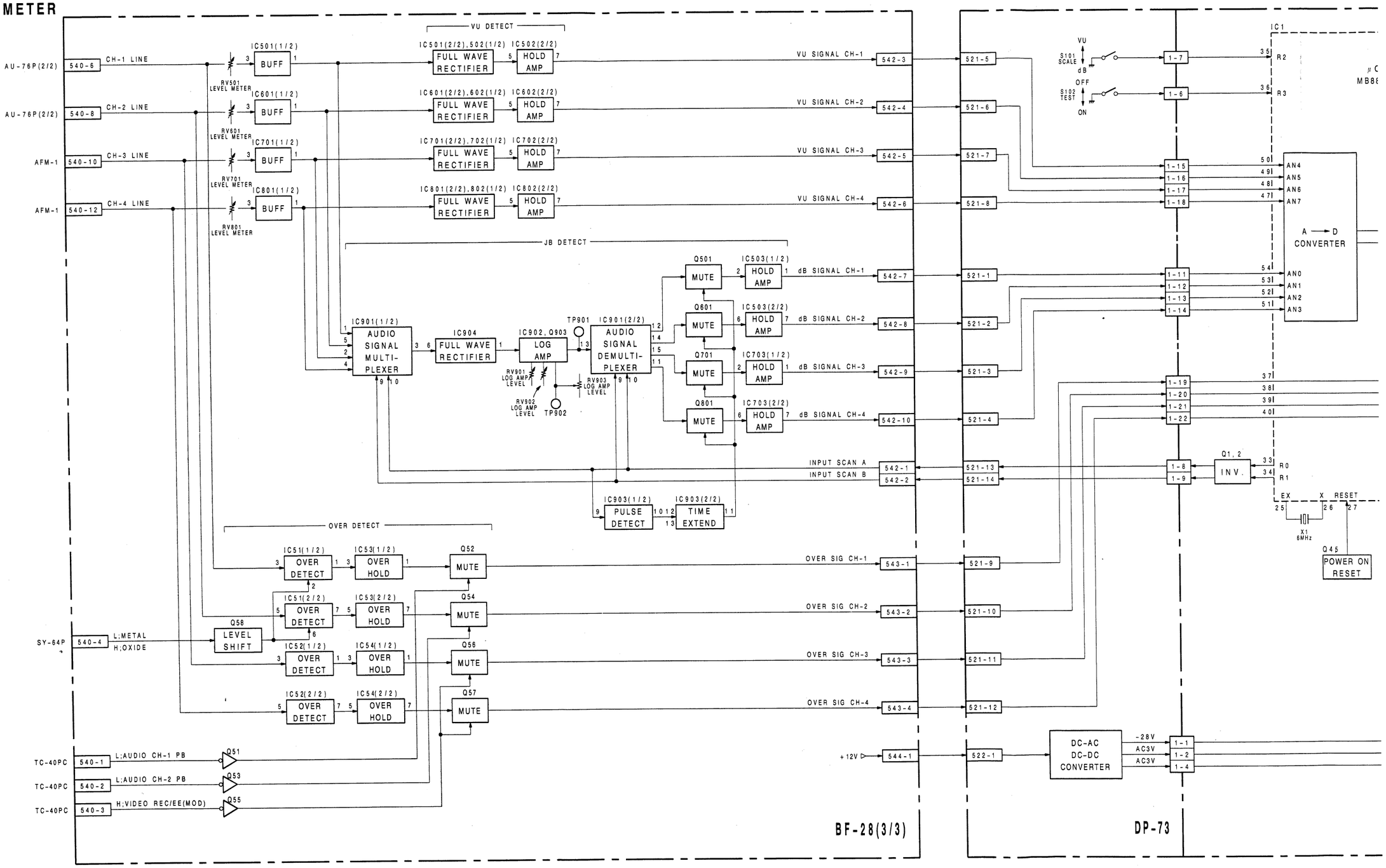

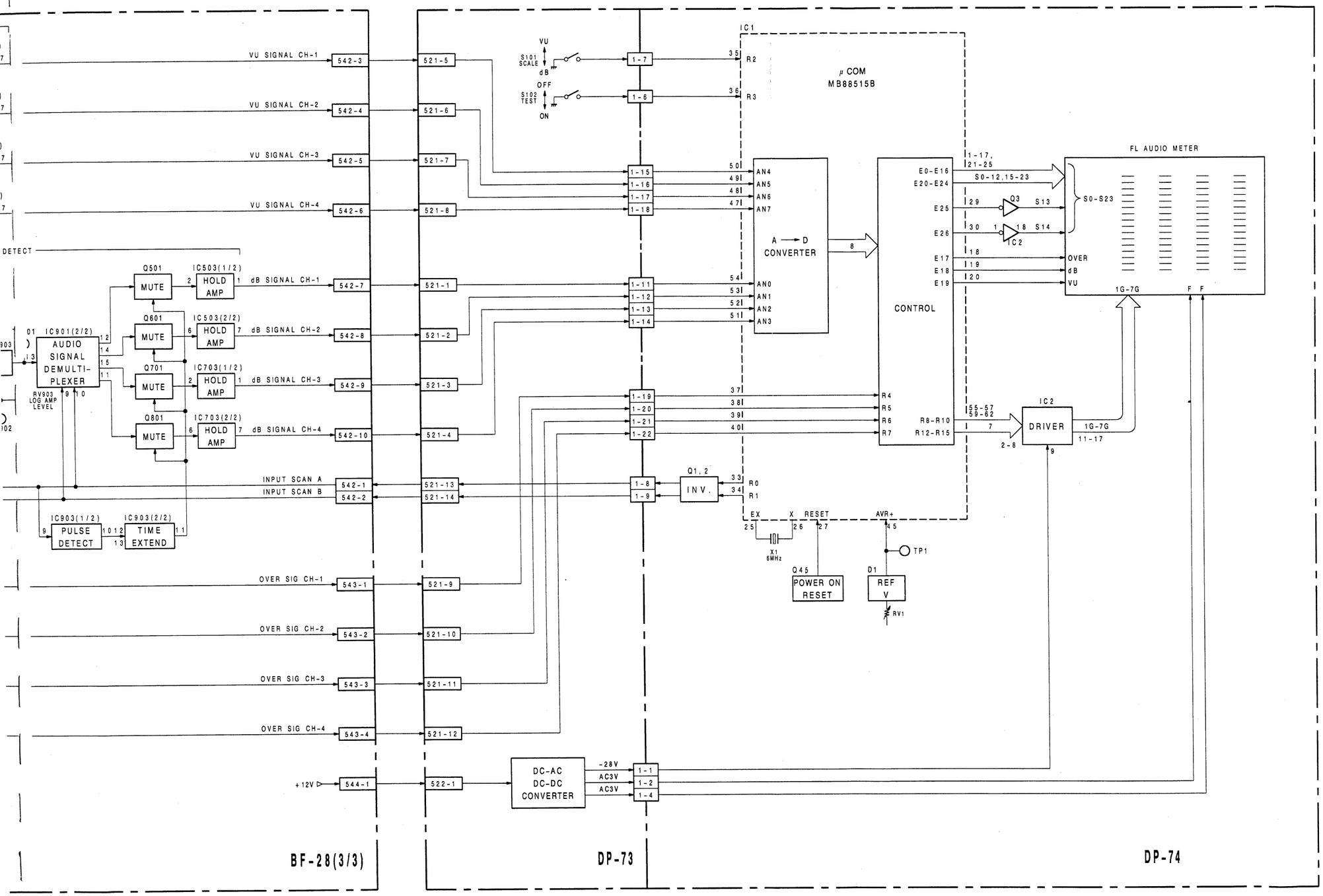

AUDIO METER
BVW-85P(EK)

MICROCOMPUTER SERVO

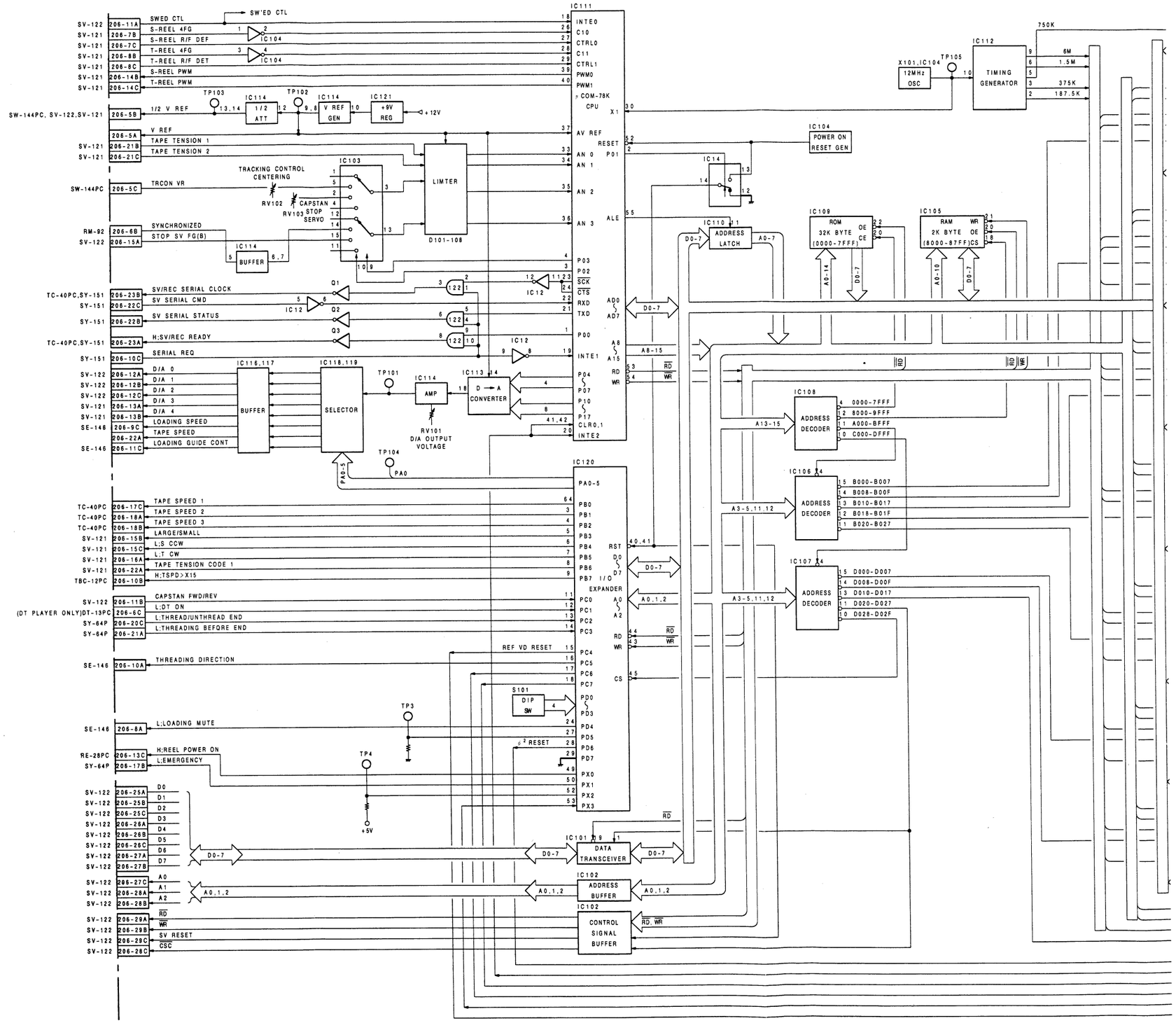

μ COM SERVO

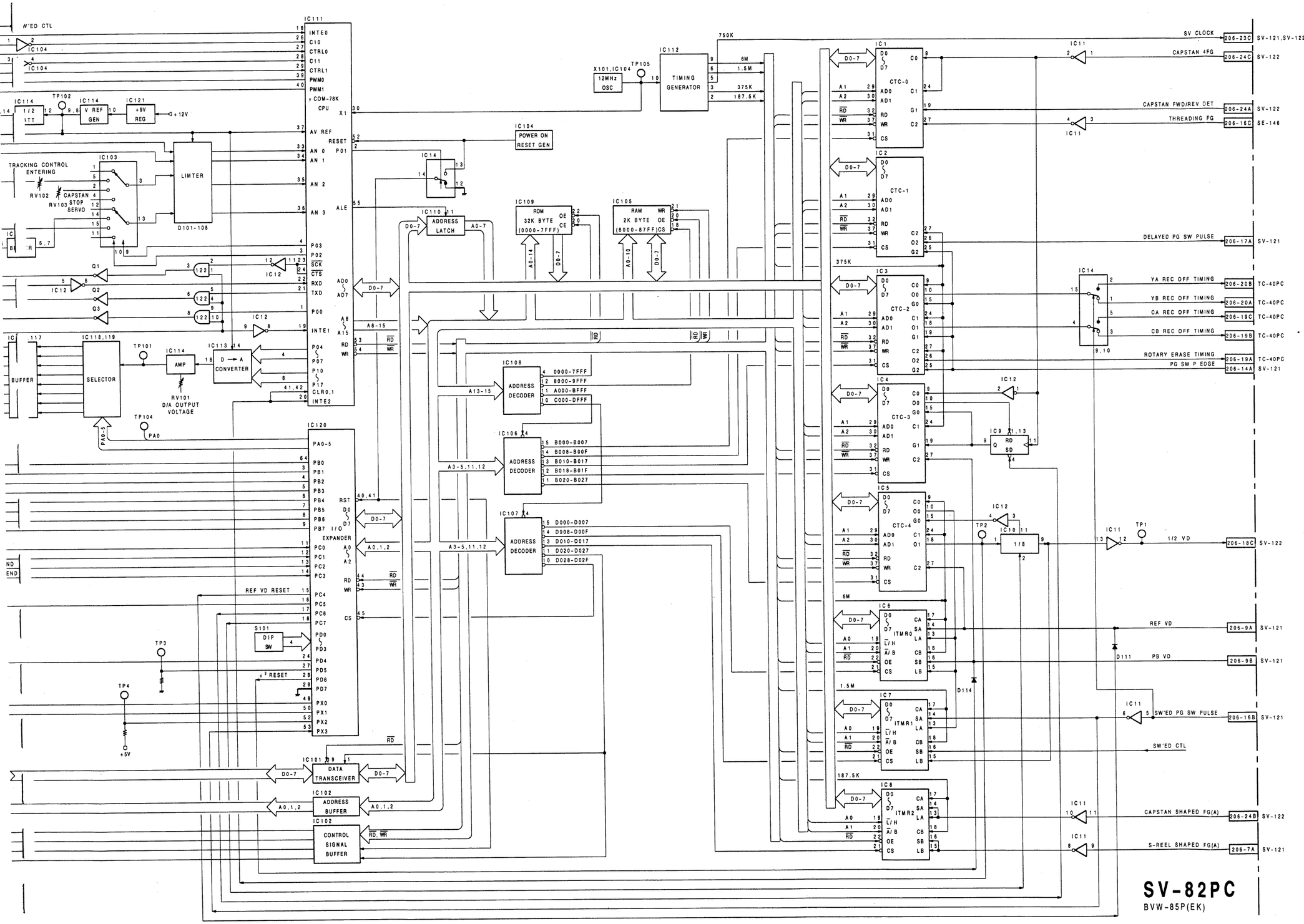

SV-82PC
BVW-85P(EK)

REEL SERVO

REEL SERVO

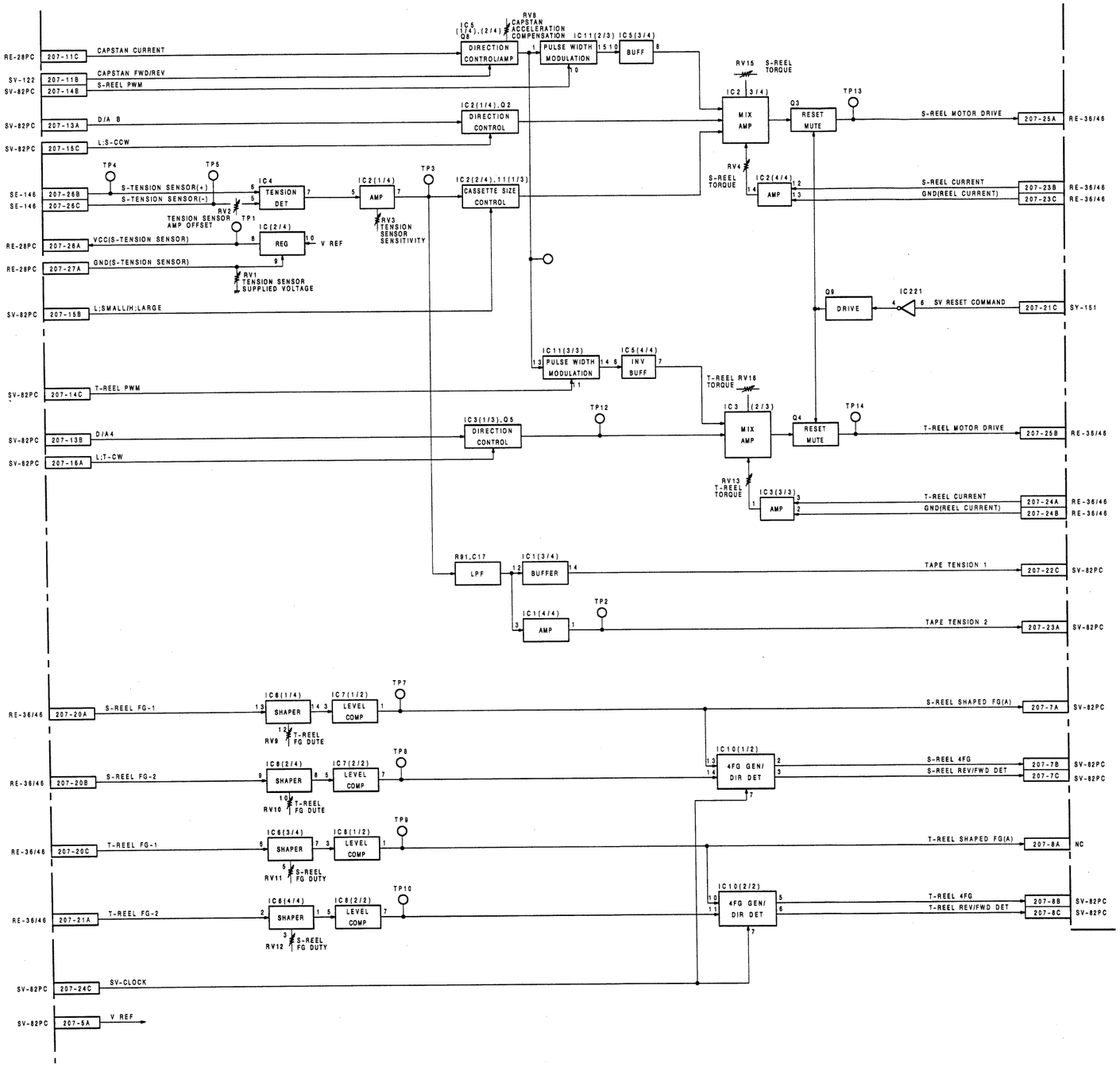

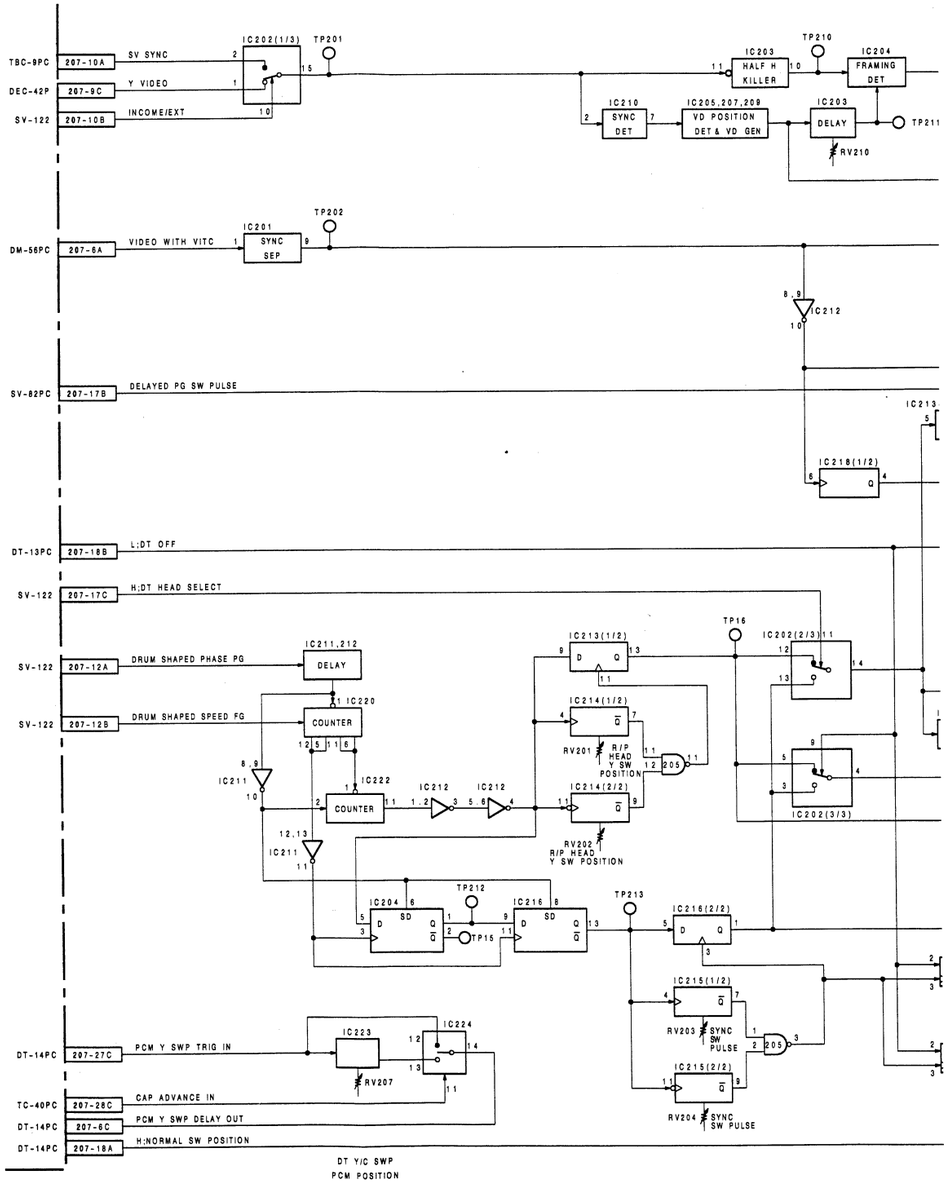

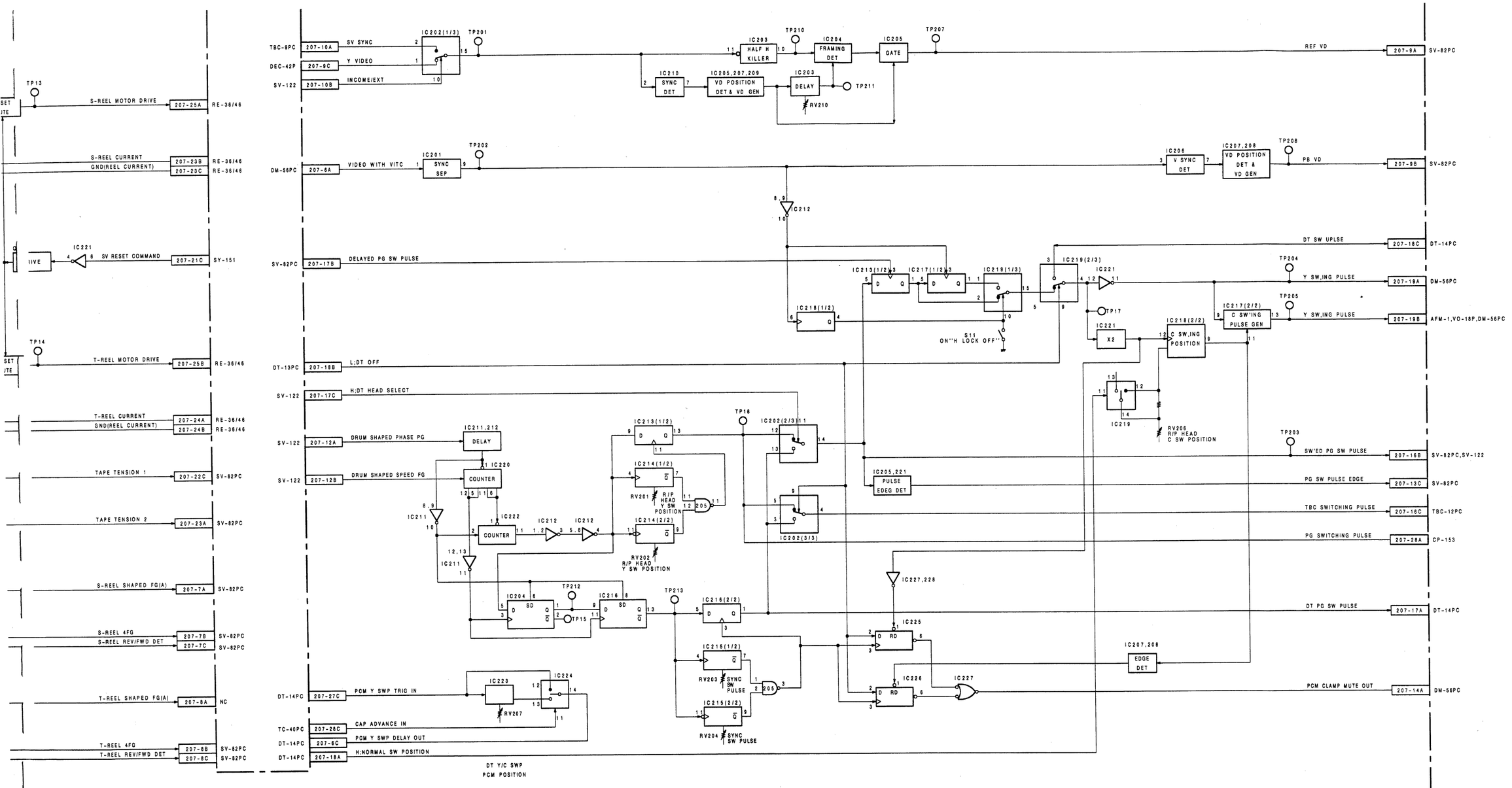

SV-121
BVW-85P(EK)

DRUM/CAPSTAN SERVO

DRUM/CAPSTAN SERVO

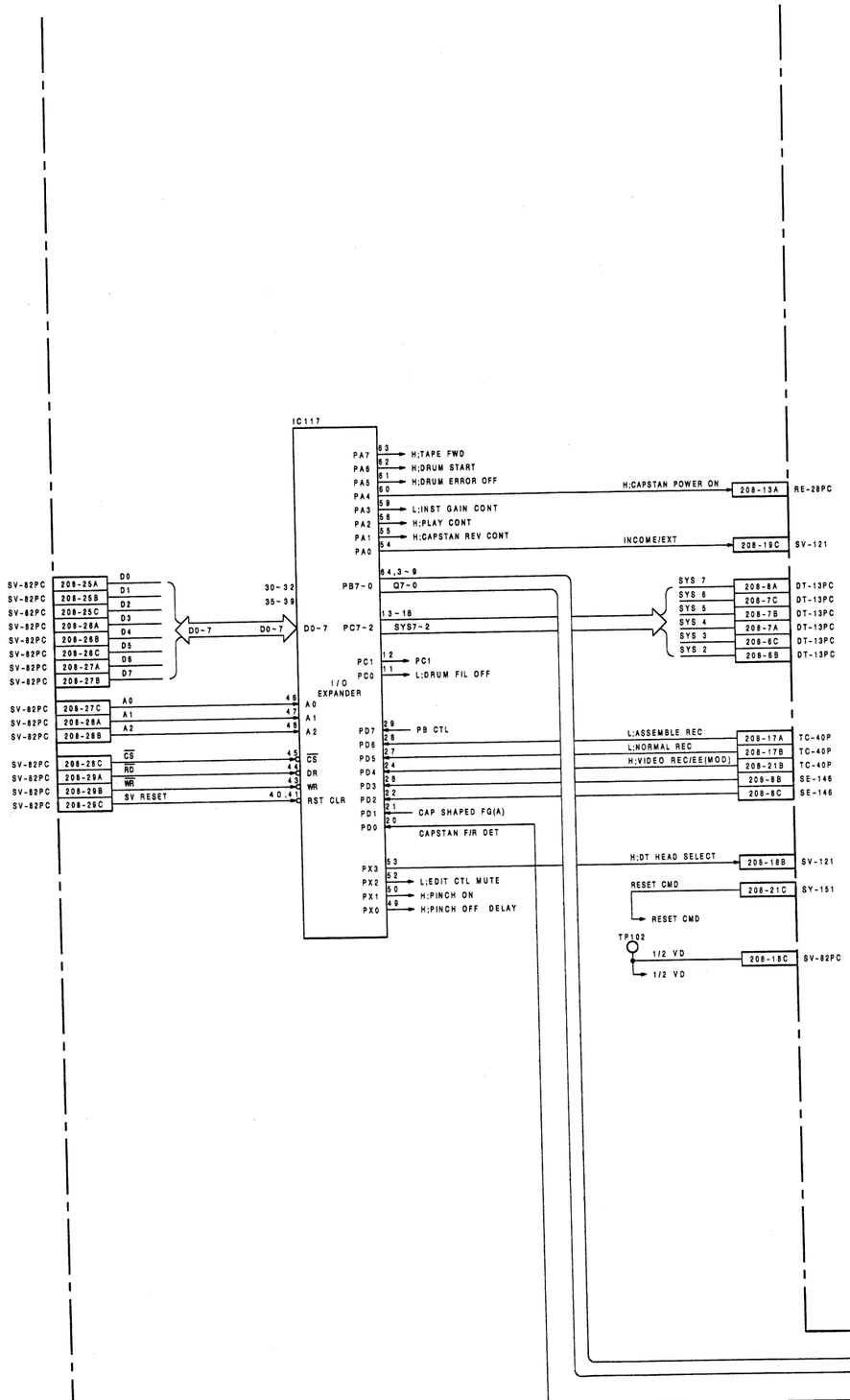

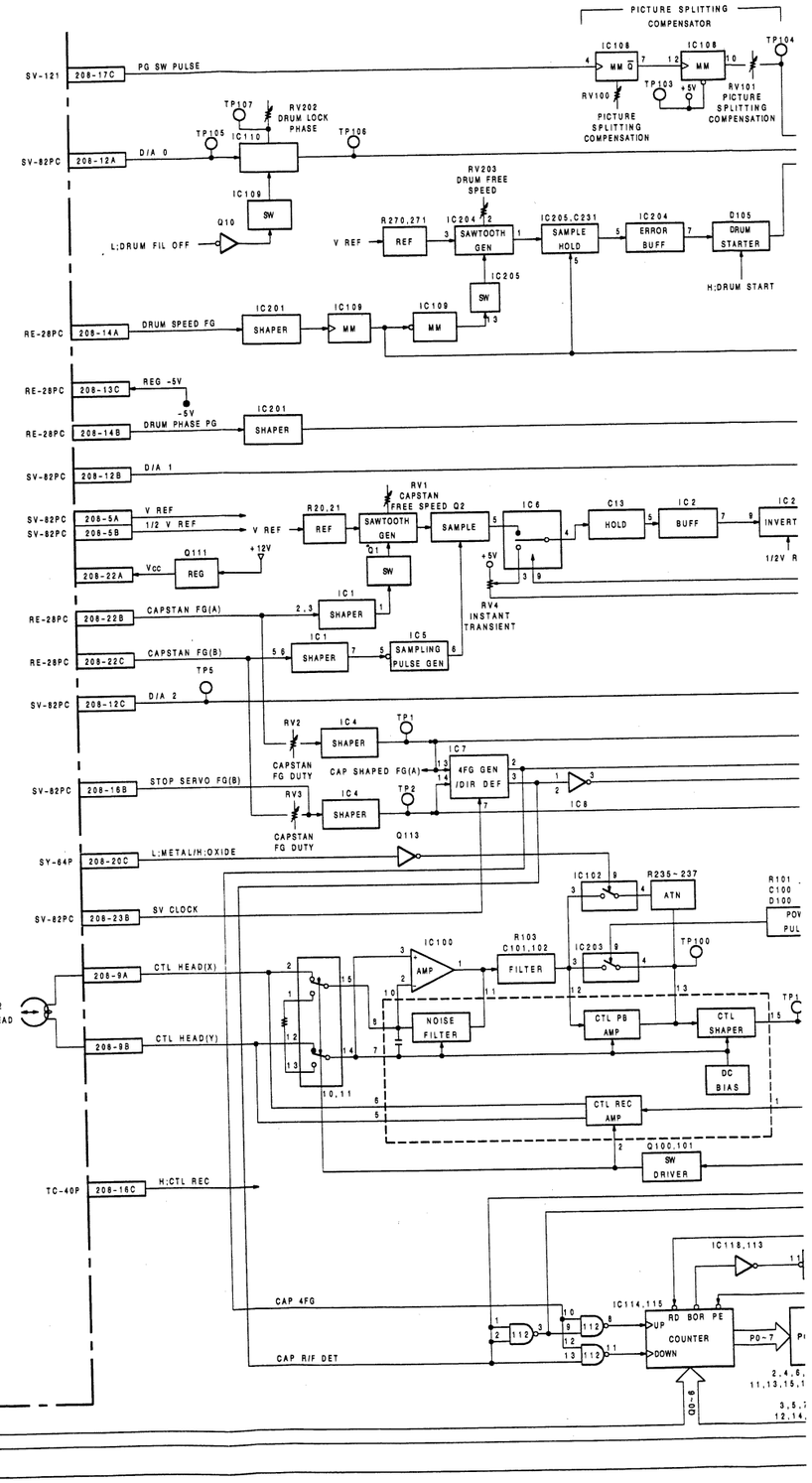

DRUM/CAPSTAN SERVO

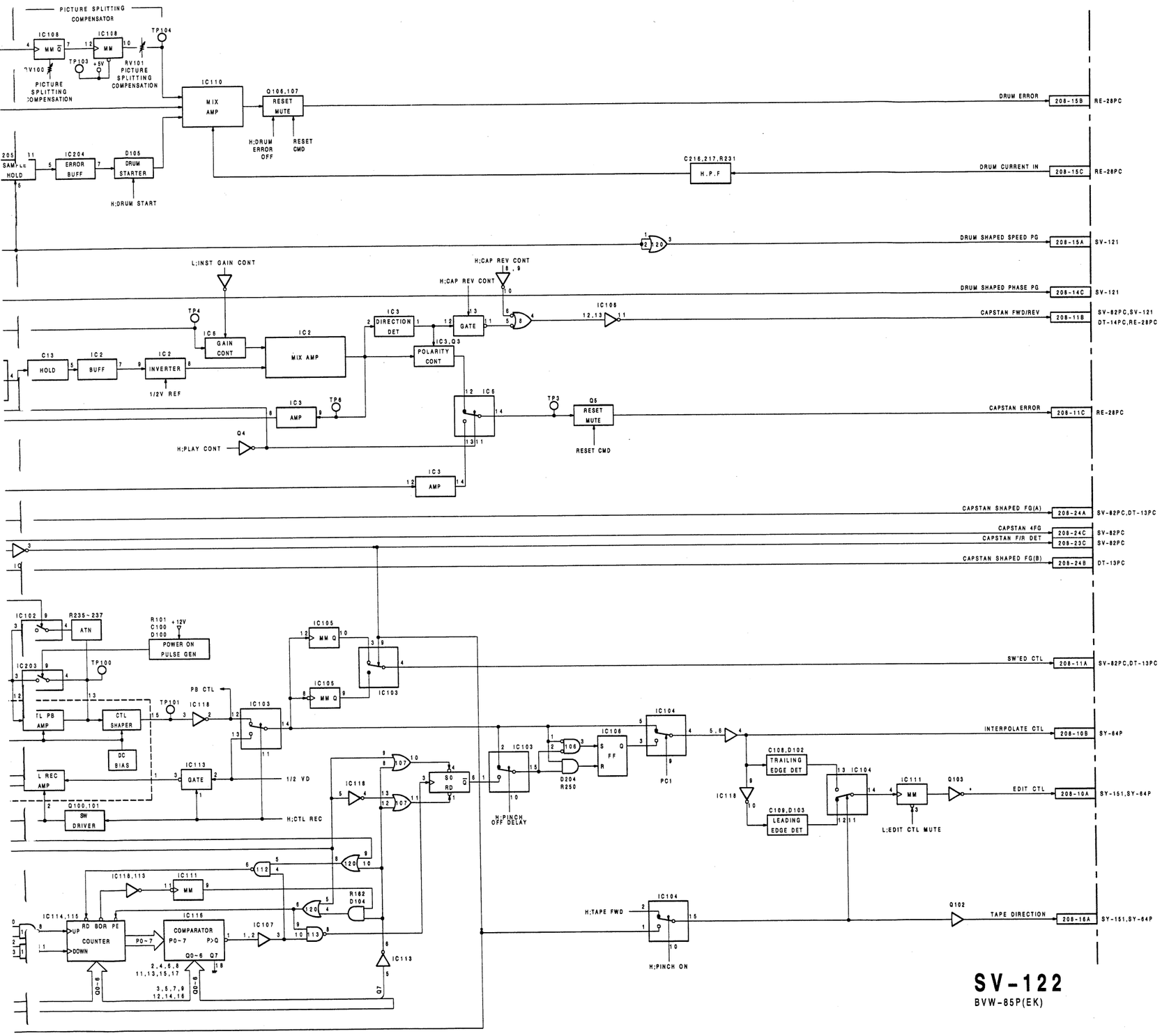

SV-122
BVW-85P(EK)

SYSTEM CONTROL

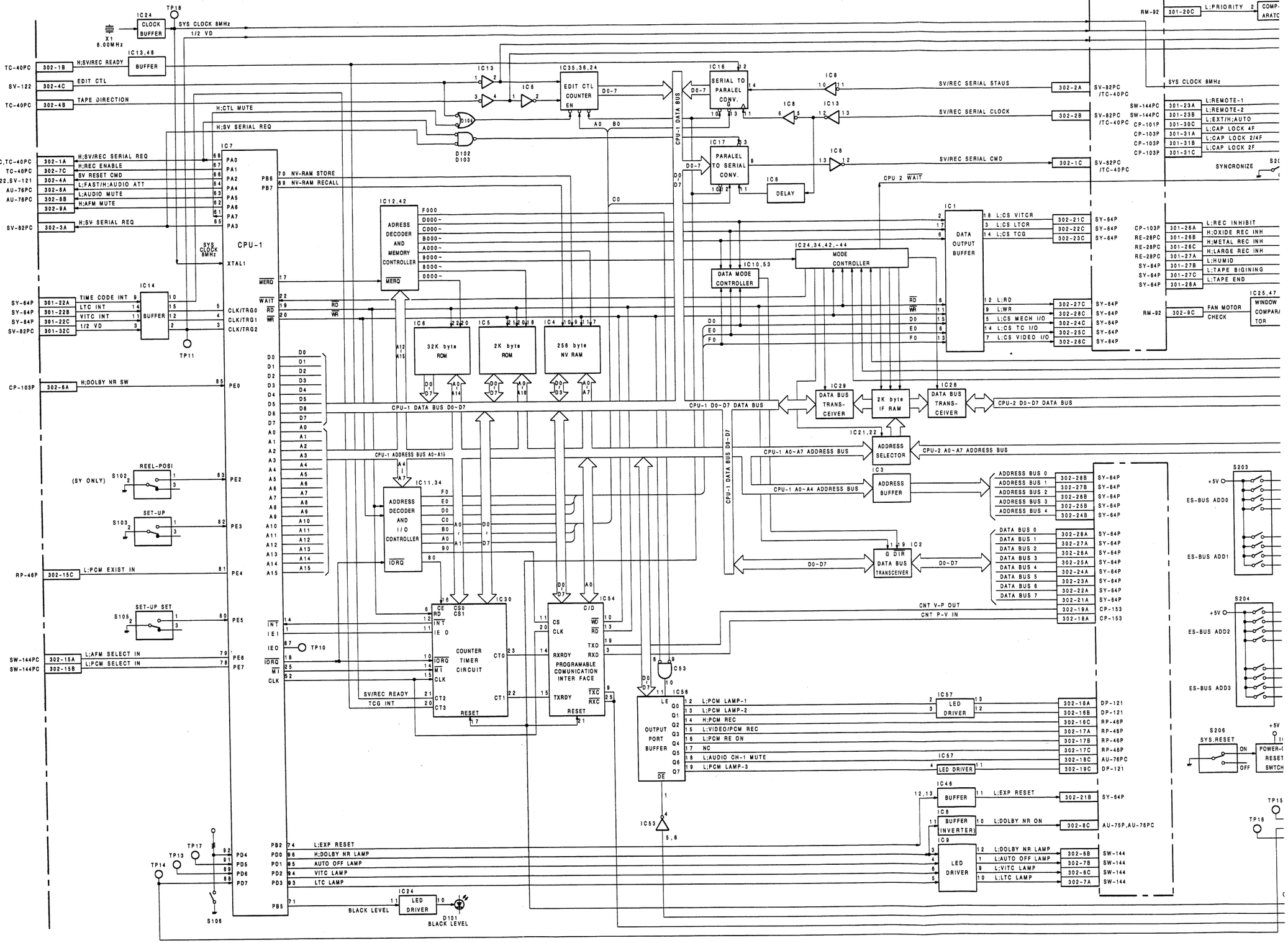

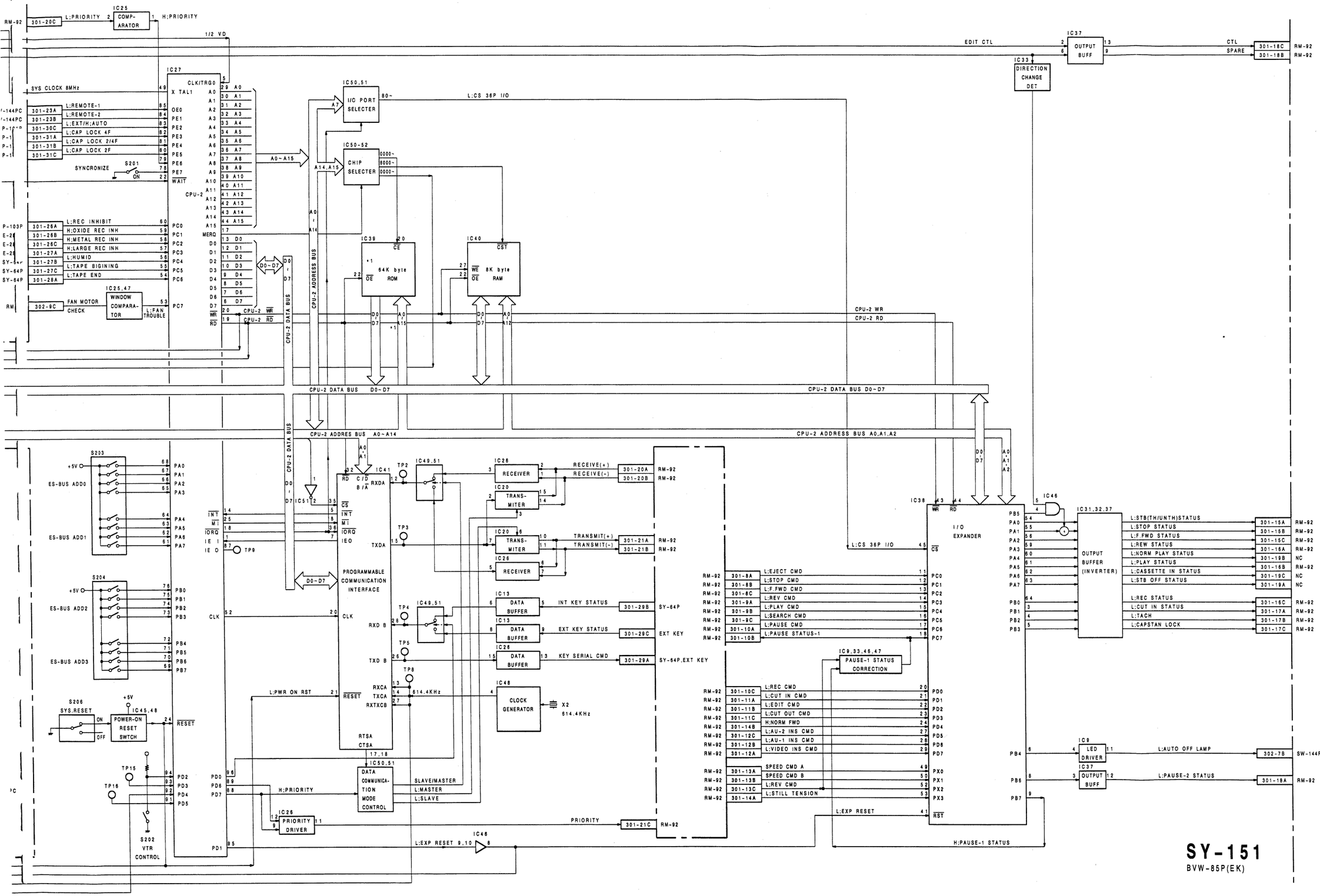

SY-151
BVW-85P(EK)

I/O EXPANDER
TIME CODE READER/GENERATOR
TIME BASE IMPACT ERROR CORRECTOR

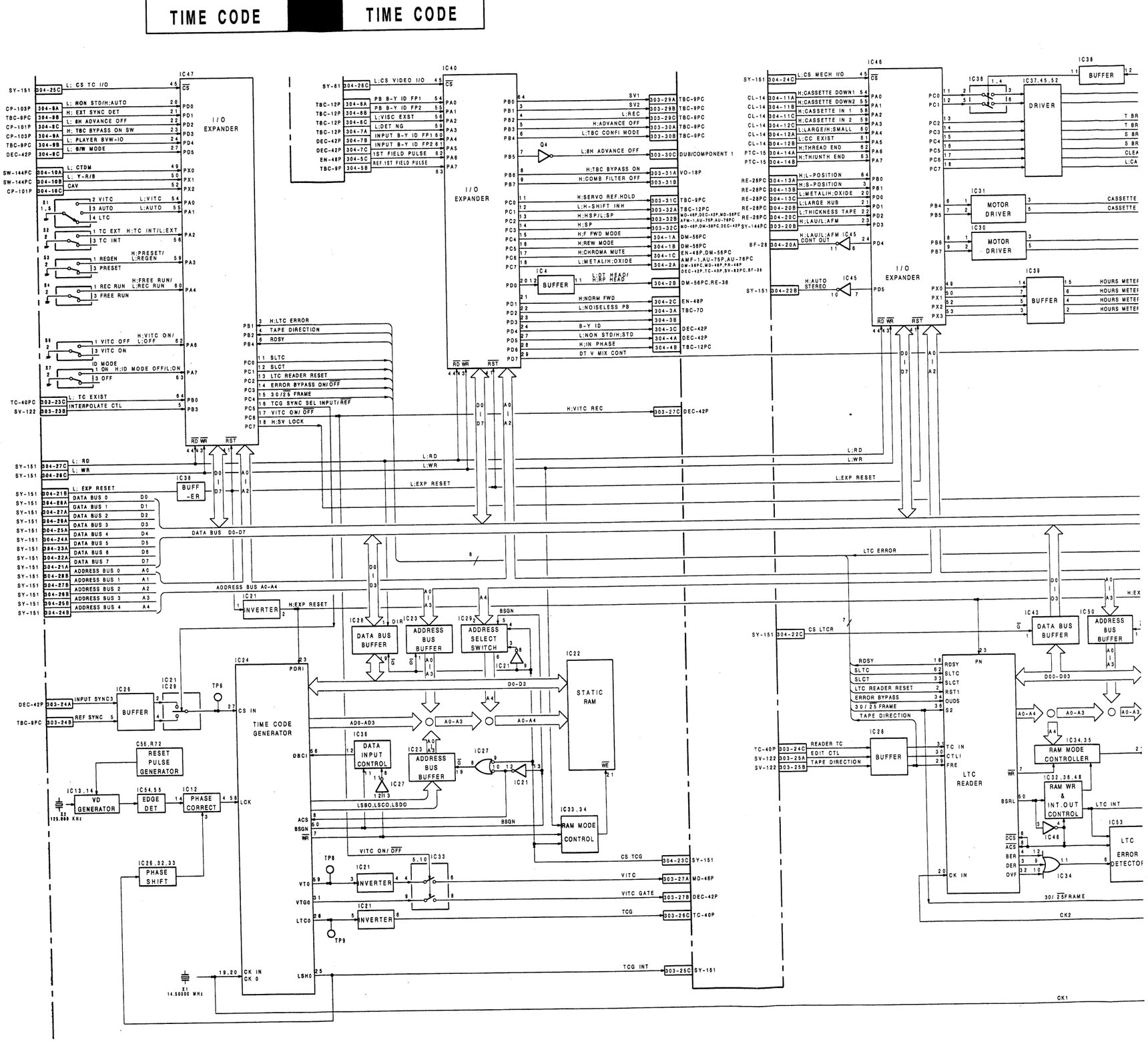

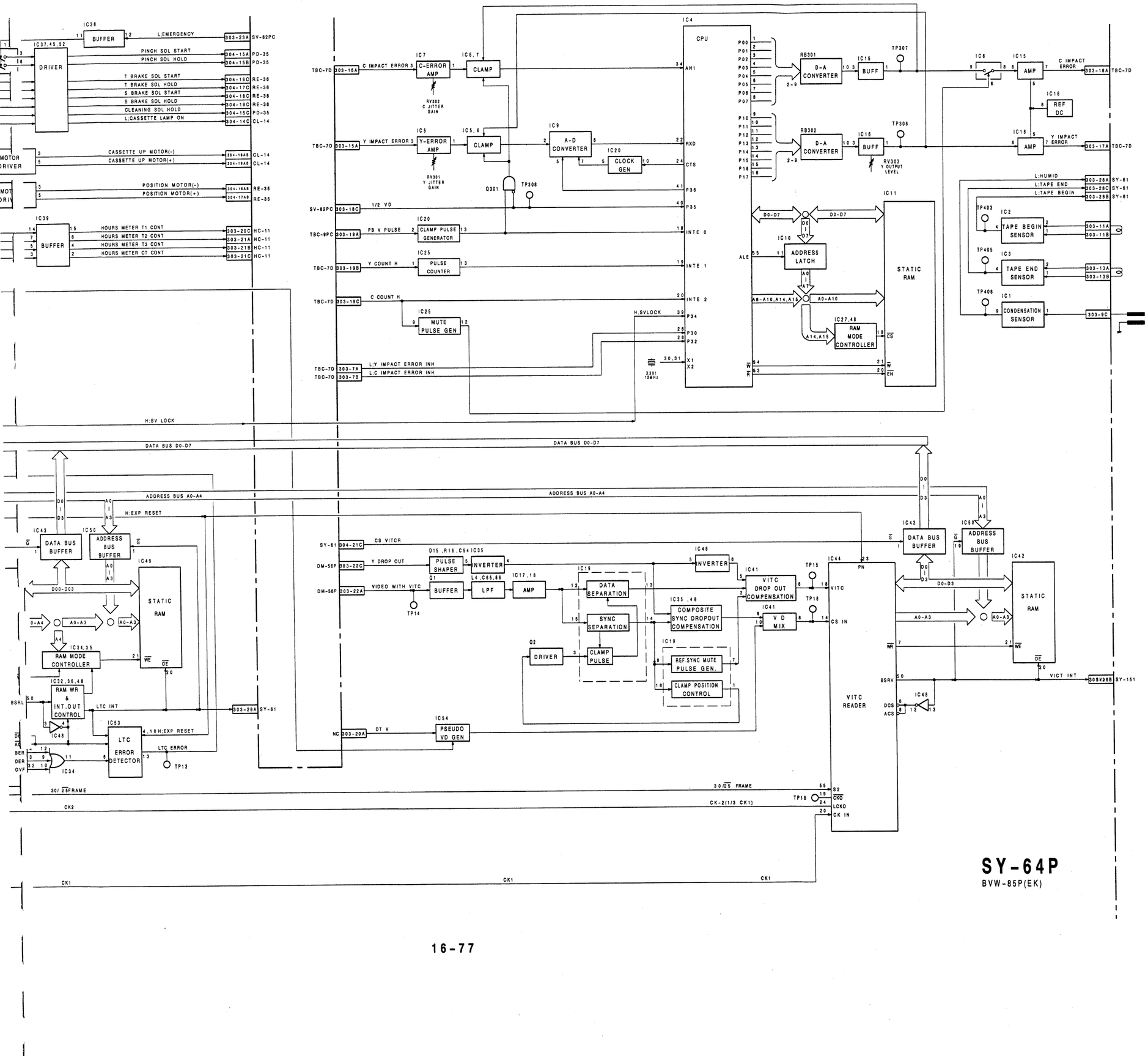

SY-64P
BVW-85P(EK)

LTC REC/PB AMPLIFIER

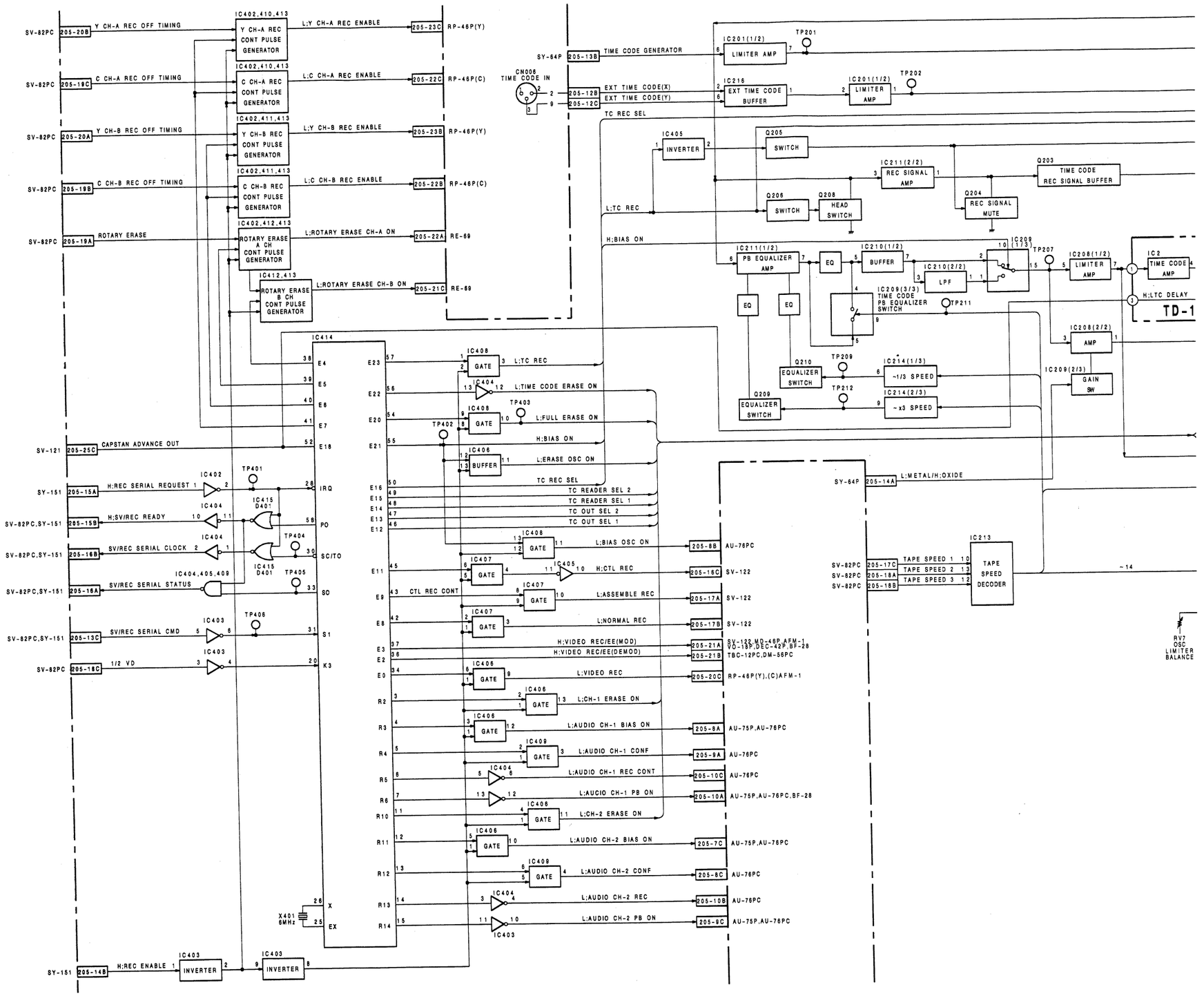

LTC REC/PB AMP

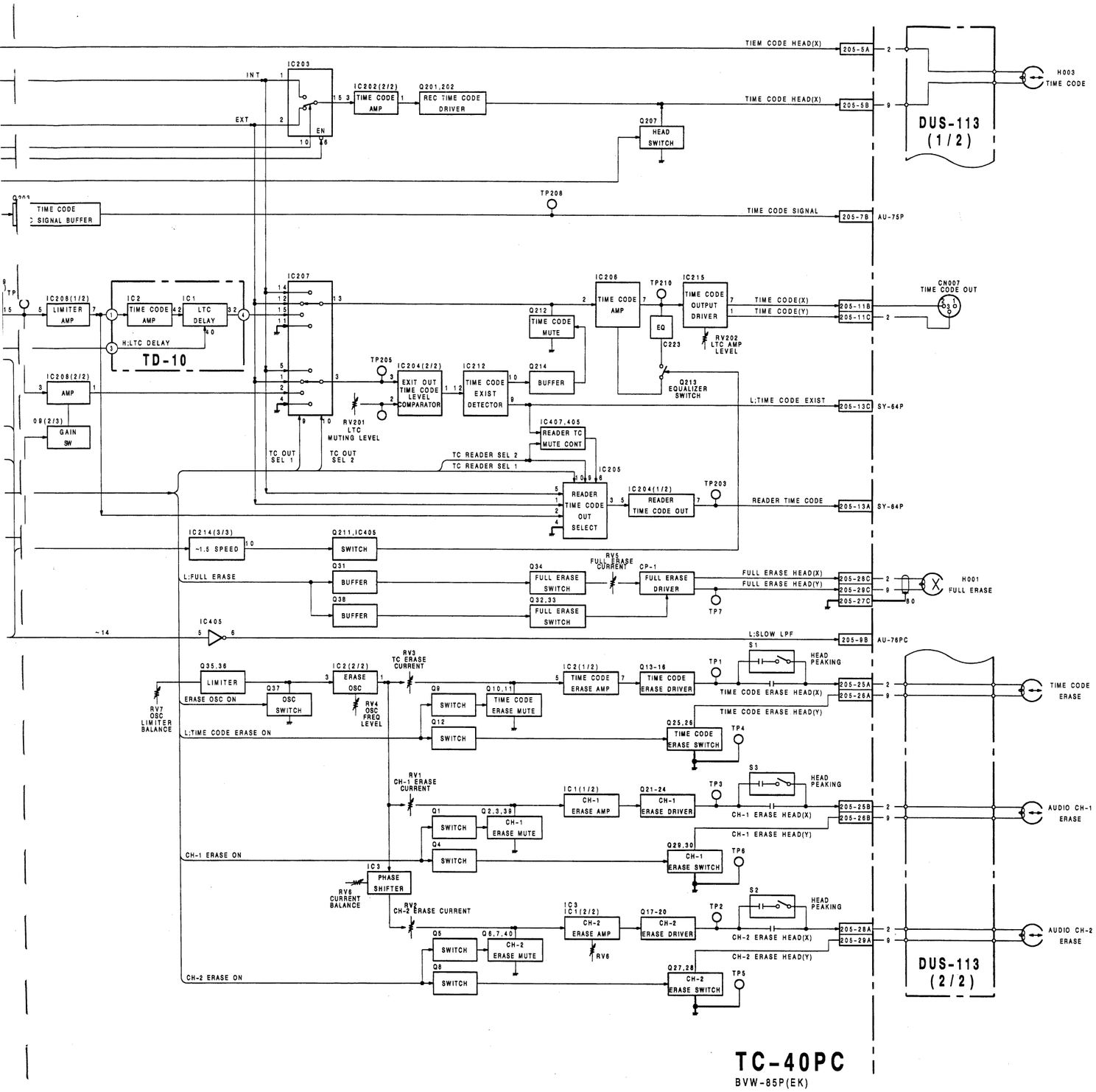

TC-40PC

BVW-85P(EK)

DYNAMIC TRACKING

DYNAMIC TRACKING

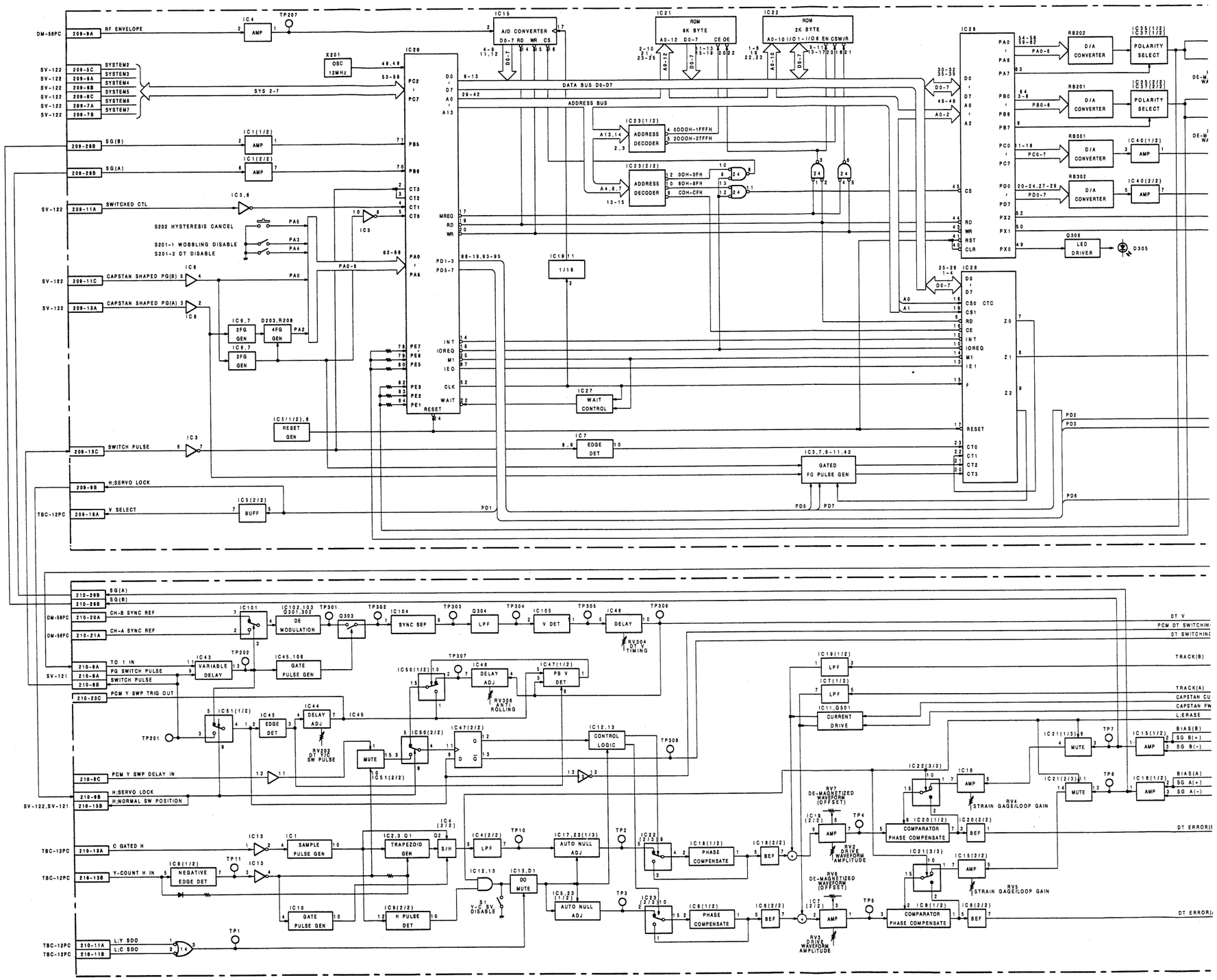

DYNAMIC TRACKING

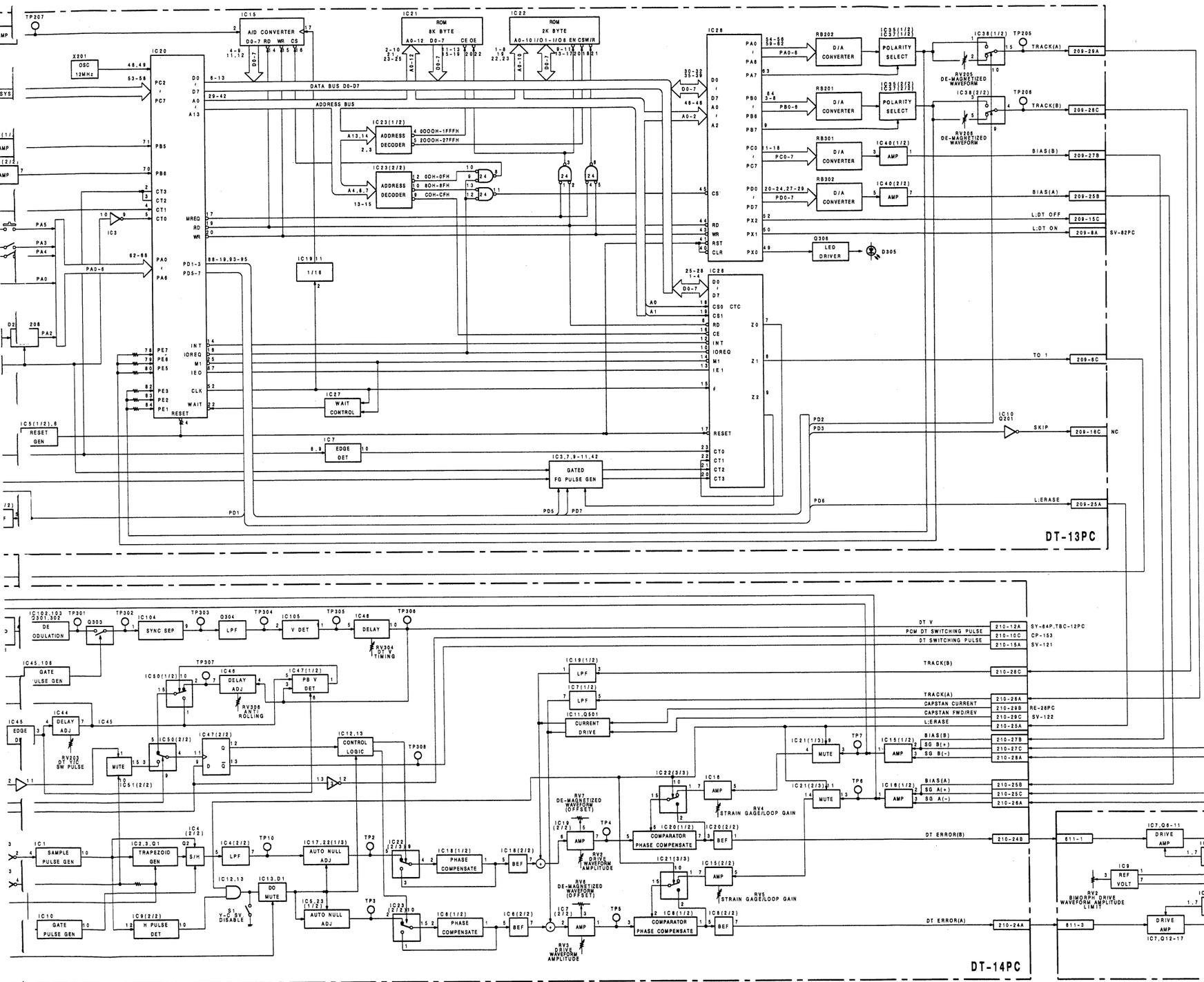

DT-13PC/-14PC/-15

BVW-85P(EK)

SECTION 17
SCHEMATIC DIAGRAM & PRINTED WIRING BOARDS

CIRCUIT CONFIGURATION

The circuit information is provided below.

System	Board	Circuit function
VIDEO	PA-110	REC/PB Pre-amplifier
	DEC-46P	Y/C Separator
	DEC-42P	C Decoder,C Compressor, Y Selector
	CF-36P	Color Framing Detector
	MD-46P	Y/C Modulator
	RP-46P	REC/PB Amplifier
	DUS-362	PCM Detector Circuit
	DM-56PC	Y/C Demodulator
	DUS-259	Metal/Oxide LPF Switch
	DUS-269	C RF Phase EQ.
	DUS-288	DO RF EQ.
	EQ-26	RF Equalizer
	EQ-28	RF Equalizer
	DUS-345	Y/C Noise Slicer in DT Mode
	TBC-7D	Time Base Corrector
	TBC-12PC	Time Base Corrector
	TG-52A	Timing Generator
	NR-32PC	Y Digital Noise Reduction, Read Clock Generator
	TBC-9PC	Time Base Corrector
	TG-52	Timing Generator
	EN-48P	C Encoder
	VO-18P	Video Output
	DUS-270	Squelch Buffer
	RE-69	Rotary Erase
	CP-103P	Sub-control Panel
	CP-101P	Video/Audio Input
	CP-153	Digital Audio Input/Output Buffer

System	Board	Circuit function
AUDIO	BF-28	Audio Buffer/Level Detector
	VR-42	Audio REC/PB Volume
	AU-75P	LNG Audio REC/PB Amplifier
	DUS-295	Cross Talk Cancel Equalizer
	AU-76PC	LNG Audio Head Amplifier, Bias Oscilator
	AFM-1	AFM Audio Modulator/ Demodulator
	CP-154	Digital Audio Monitor Input Buffer
	CP-161	Audio Output Balanced Amplifier/Driver
	HP-33	Headphones Amplifiter/Jack
	VR-62	Headhones Lavel Volume
	DP-74	Audio Level Meter
	DP-73	DC-AC/DC Converter
	SW-144PC	Select Switch/Display
	DP-72	Video/RF Meter LED
	VR-61	Video/Trackig Control Volume
	DP-121	Audio System Indicator

System	Board	Circuit function
SERVO	SV-82PC	Microcomputer Servo
	SV-121	Reel Setvo
	SV-122	Capstan/Drum Servo
	RE-28PC	Capstan/Drum Motor Driver
	PTC-20	Cassette Detector (Tape Thickness,Reel Hub Diameter,Metal/oxide)
	PTC-36	Cassette Detector(Tape Thickness,Reel Hub Diameter,Metal/oxide)
	PTC-21	Reel Table Position Detector
	PTC-23	REC Inhibit Detector
	DR-56	Capstan/Reel Motor Driver & Drum Error Amplifier
	RE-36	Reel Motor Driver
	RM-40	Reel Motor
	DE-15	Reel Motor FG
	SE-146	Threding Motor/MT Guide Motor Control
	PTC-31	Threading Motor FG
	PTC-40	MT Guide Up/Down Sensor
	TR-18	Tape Tension Sensor
	DT-13PC	Dynamic Tracking
	DT-14PC	Dynamic Tracking
	DUS-282	Strain Gauge Buffer
	DT-15	Dynamic Tracking

System	Board	Circuit function
SYSTEM CONTROL	SY-151	System Control
	SY-64P	Time Code Reader/ Generator
	RM-92	Remote Connector
	PD-35	Pinch & Cleaning Solenoid
	PTC-15	Threading & unthreading End Sensor
	CL-14	Cassette-up Compartment
	CL-24	Cassette-up Compartment LED
	PC-47	Large/Small Cassette Detector
	PC-33	Cassette Down Detector
	PC-41	Cassette In Detector
	CCM-2	Cassette-up Compartment Up/Down Motor
	HC-11	Hours Meter
	KY-188PC	Keyboard
	KY-205	Keyboard
	KY-206	Keyboard
	DP-136	Time Counter Display
	PTC-39	Search Dial
	PT-9	Power Transistor
	TC-40PC	LTC REC/PB Amplifier, Erase Driver
	TD-10	Time Code Amplifier
OTHERS	AC-96	Relay Board of AC Inlet
	SW'G REG(UR-21B)	Switching Regulator
	M1	Switching Regulator
	M2	Switching Regulator
	C1	Switching Regulator
	C2	Switching Regulator
	SW'G REG(SOPS-1015)	Switching Regulator
	MB-331	Mother Board
	MB-332	Mother Board
	EX-116	Extension Board
	EX-167	Extension Board
	EX-279	Extension Board

DEC-46P(1/2):Y/C SEPARATOR

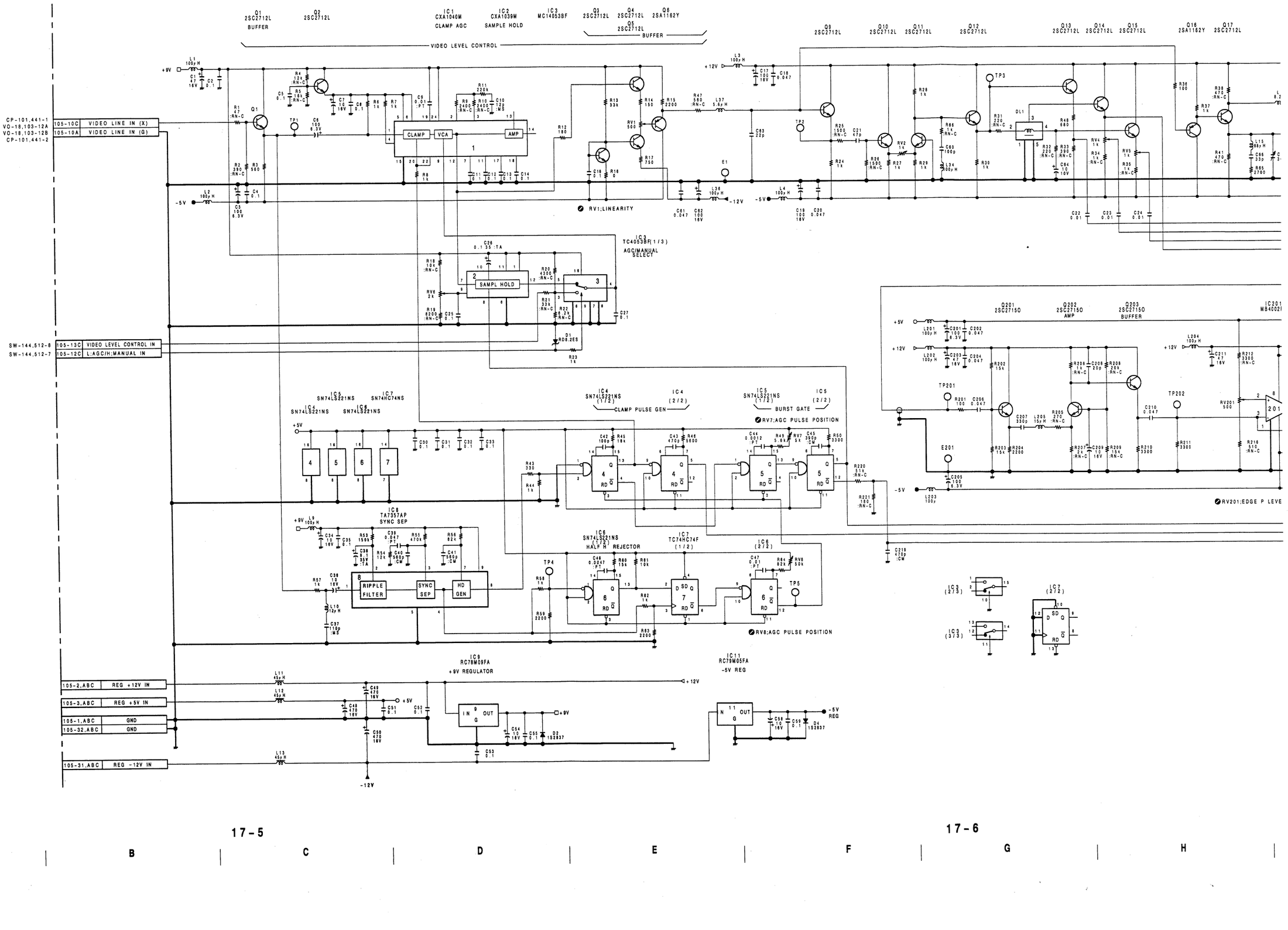

17-5 17-6

A B C D E F G H

DEC-46P(1/2)

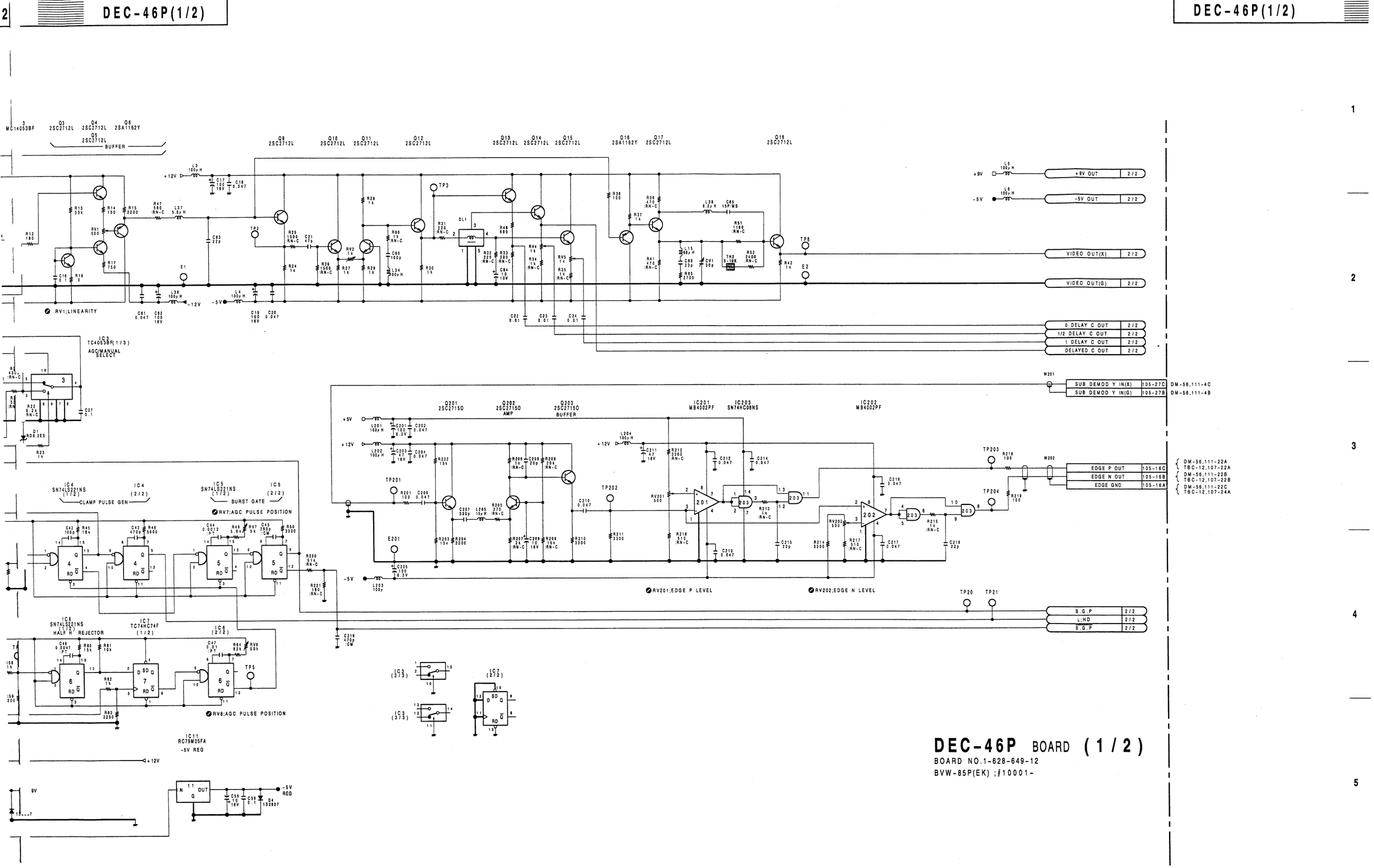

DEC-46P BOARD (1/2)

BOARD NO.1-628-649-12

BVW-85P(EK) ;#10001-

DEC-46P(2/2):Y/C SEPARATOR

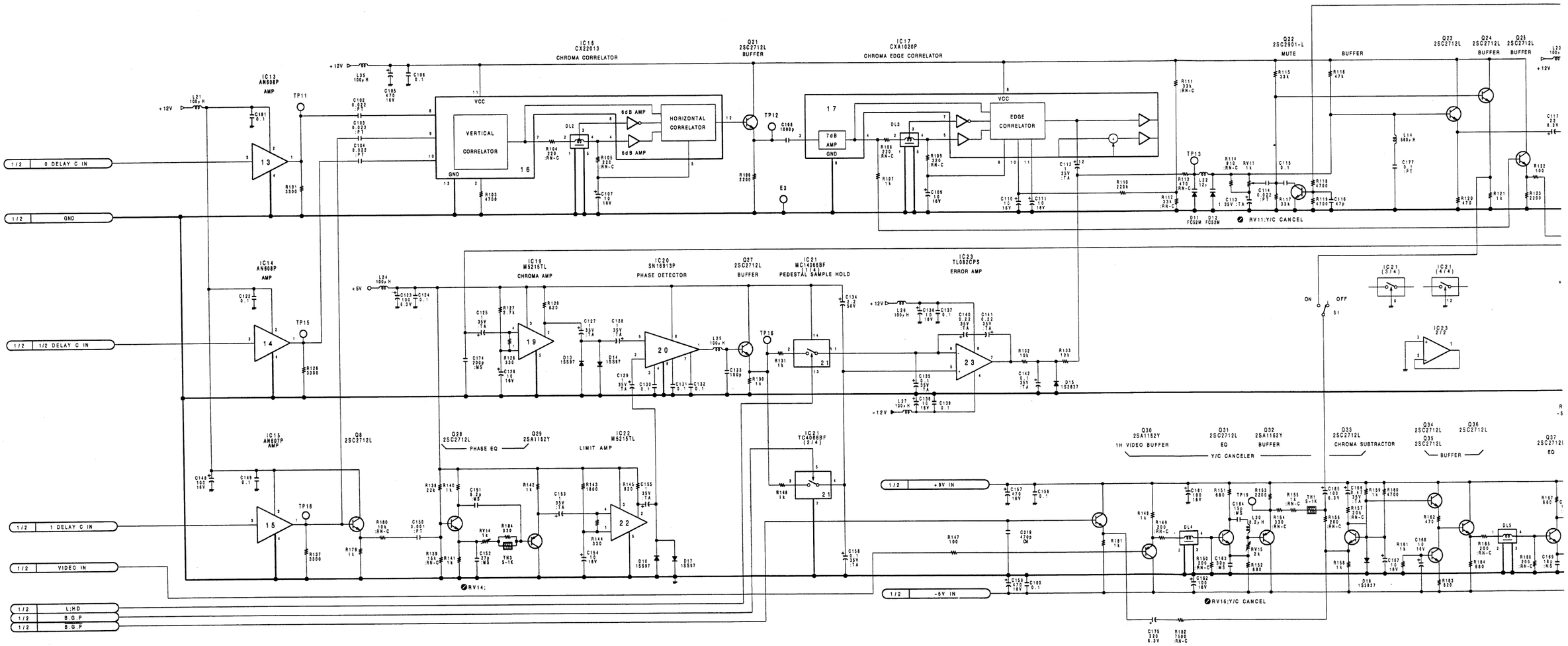

A B C D E F G H

DEC-46P(2/2)

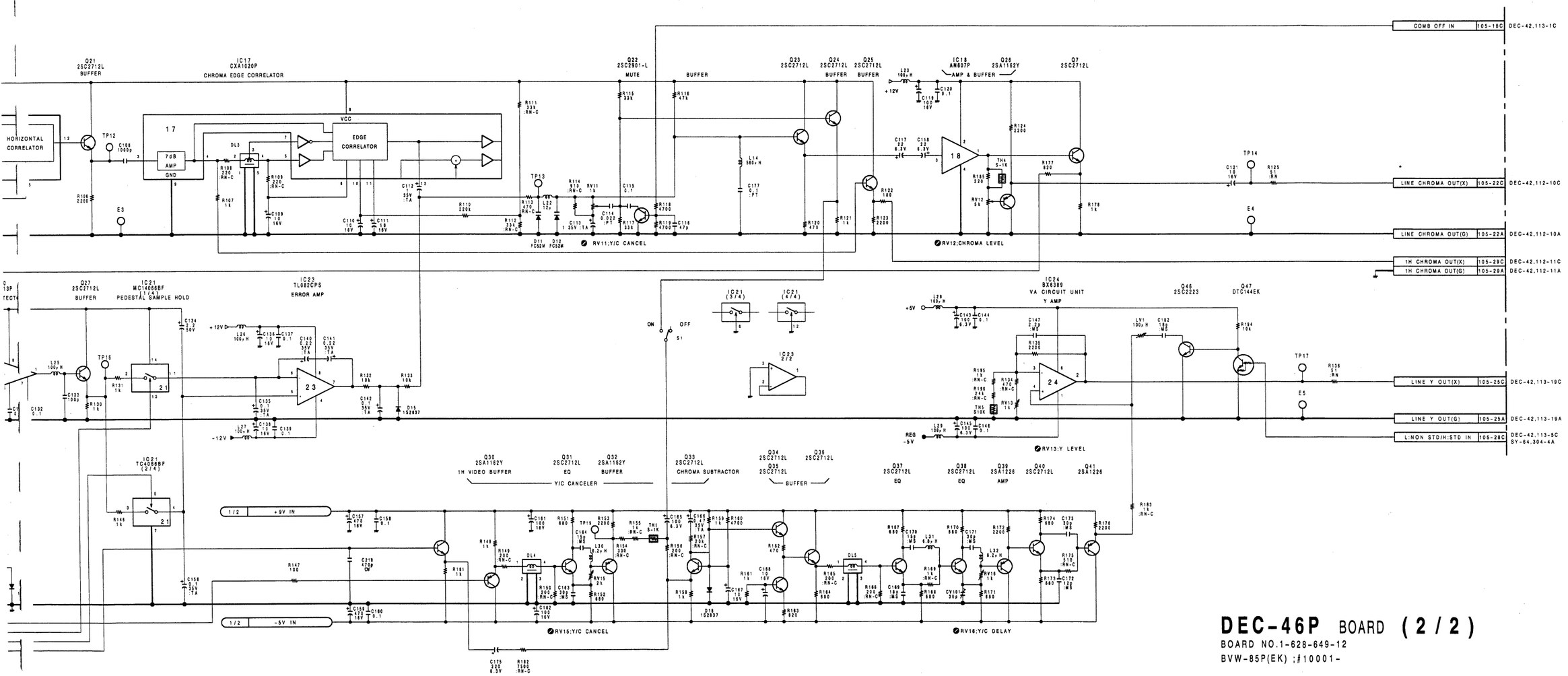

DEC-46P BOARD (2/2)

BOARD NO.1-628-649-12

BVW-85P(EK) ;#10001-

DEC-46P(1-628-649-12)
BVW-85P

CN105	H-3	*Q4	F-6	TH1	D-2
		*Q5	E-6	TH2	A-2
CV1	A-3	*Q6	E-6	TH3	D-4
CV101	E-1	*Q7	G-3	TH4	G-3
		*Q8	B-2	TH5	F-1
DL1	A-2	*Q9	A-4		
DL2	C-3	*Q10	A-4	TP1	G-5
DL3	D-3	*Q11	B-3	TP2	B-4
DL4	B-1	*Q12	A-3	TP3	A-3
DL5	D-1	*Q13	A-3	TP4	G-4
		*Q14	A-2	TP5	F-5
D1	E-6	*Q15	A-2	TP11	B-3
*D2	G-6	*Q16	A-4	TP12	C-3
*D4	H-1	*Q17	A-3	TP13	D-2
D11	D-2	*Q18	A-2	TP14	H-3
D12	D-3	*Q19	C-2	TP15	B-3
D13	G-2	*Q21	C-3	TP16	G-3
D14	G-2	Q22	E-3	TP17	G-2
*D15	E-2	*Q23	E-3	TP18	B-2
D16	F-4	*Q24	E-2	TP19	C-1
D17	F-3	*Q25	D-3	TP20	F-3
*D18	C-1	*Q26	H-3	TP21	F-4
		*Q27	G-3	TP201	C-4
E1	F-5	*Q28	D-3	TP202	B-5
E2	A-4	*Q29	E-4	TP203	B-6
E3	C-3	*Q30	B-1	TP204	A-6
E4	H-3	*Q31	B-1		
E5	G-1	*Q32	C-2		
E201	C-5	*Q33	D-1		
		*Q34	D-1		
IC1	G-6	*Q35	D-1		
IC2	F-6	*Q36	D-1		
IC3	E-5	*Q37	D-1		
IC4	F-5	*Q38	E-1		
IC5	E-4	*Q39	E-2		
IC6	G-4	*Q40	E-1		
IC7	F-4	*Q41	F-2		
IC8	G-4	*Q46	F-2		
IC9	G-6	*Q47	F-2		
IC11	H-1	*Q201	B-4		
IC13	B-3	*Q202	B-4		
IC14	B-3	*Q203	B-5		
IC15	B-2				
IC16	C-3	RV1	F-6		
IC17	D-3	RV2	B-3		
IC18	G-3	RV4	B-2		
IC19	G-2	RV5	B-2		
IC20	F-3	RV6	F-6		
IC21	F-3	RV7	E-4		
IC22	E-3	RV8	G-5		
IC23	F-3	RV11	E-3		
IC24	G-1	RV12	H-3		
IC201	A-5	RV13	F-1		
IC202	A-5	RV14	D-4		
IC203	A-6	RV15	A-2		
		RV16	E-1		
LV1	G-2	RV201	B-5		
		RV202	B-6		
*Q1	G-5				
*Q2	G-6	*S1	C-2		
*Q3	E-6				

* : SOLDERING SIDE

DEC-46P; Y/C SEPARATOR

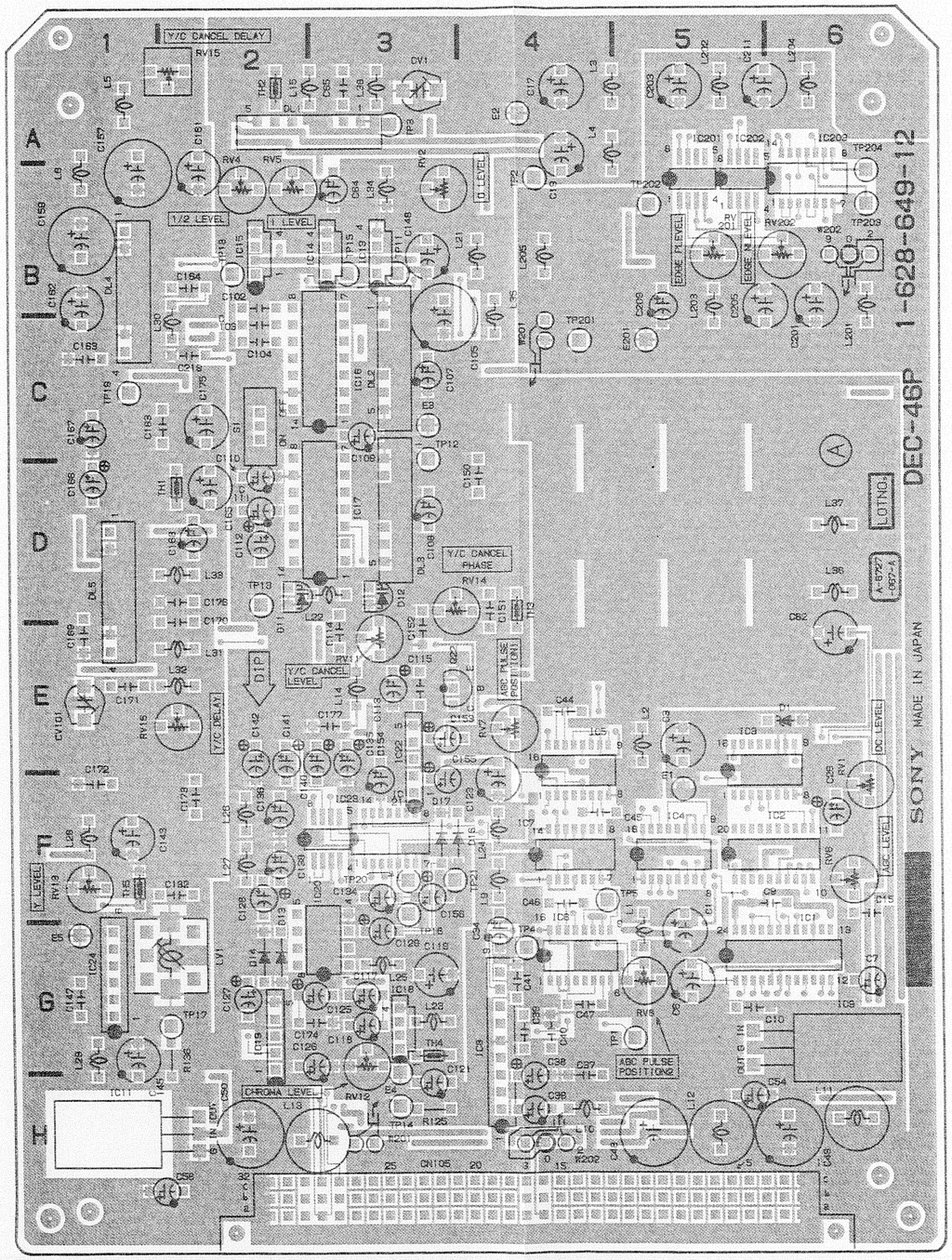

DEC-46P 1-628-649-12 A SIDE

A Side is the same as Component Side.

DEC-46P

DEC-46P; Y/C SEPARATOR

D - 2
A - 2
D - 4
G - 3
F - 1

G - 5
B - 4
A - 3
G - 4
F - 5
B - 3
C - 3
D - 2
H - 3
B - 3
G - 3
G - 2
B - 2
C - 1
F - 3
F - 4
1 C - 4
2 B - 5
3 B - 6
4 A - 6

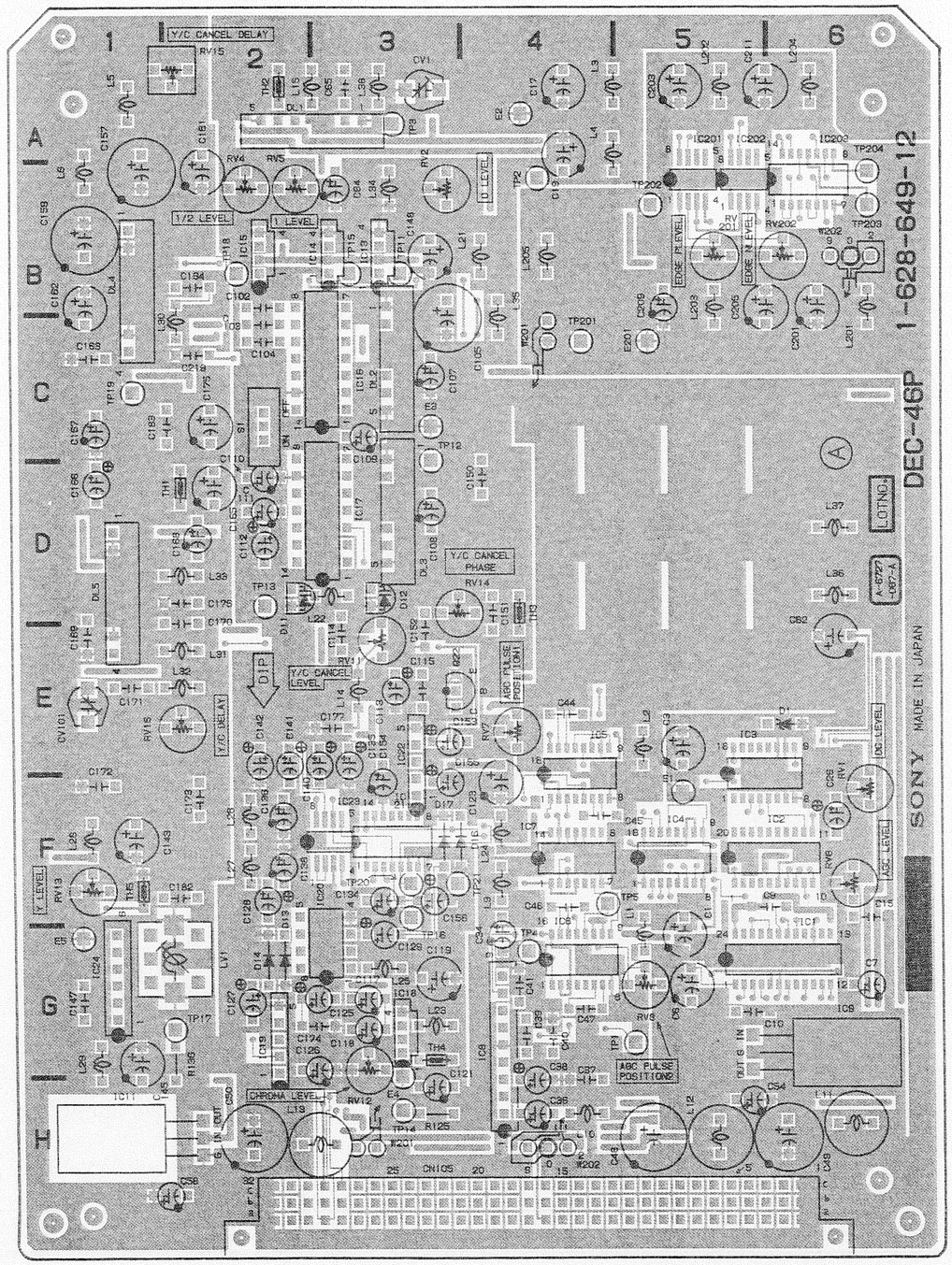

DEC-46P 1-628-649-12 A SIDE

A Side is the same as Component Side.

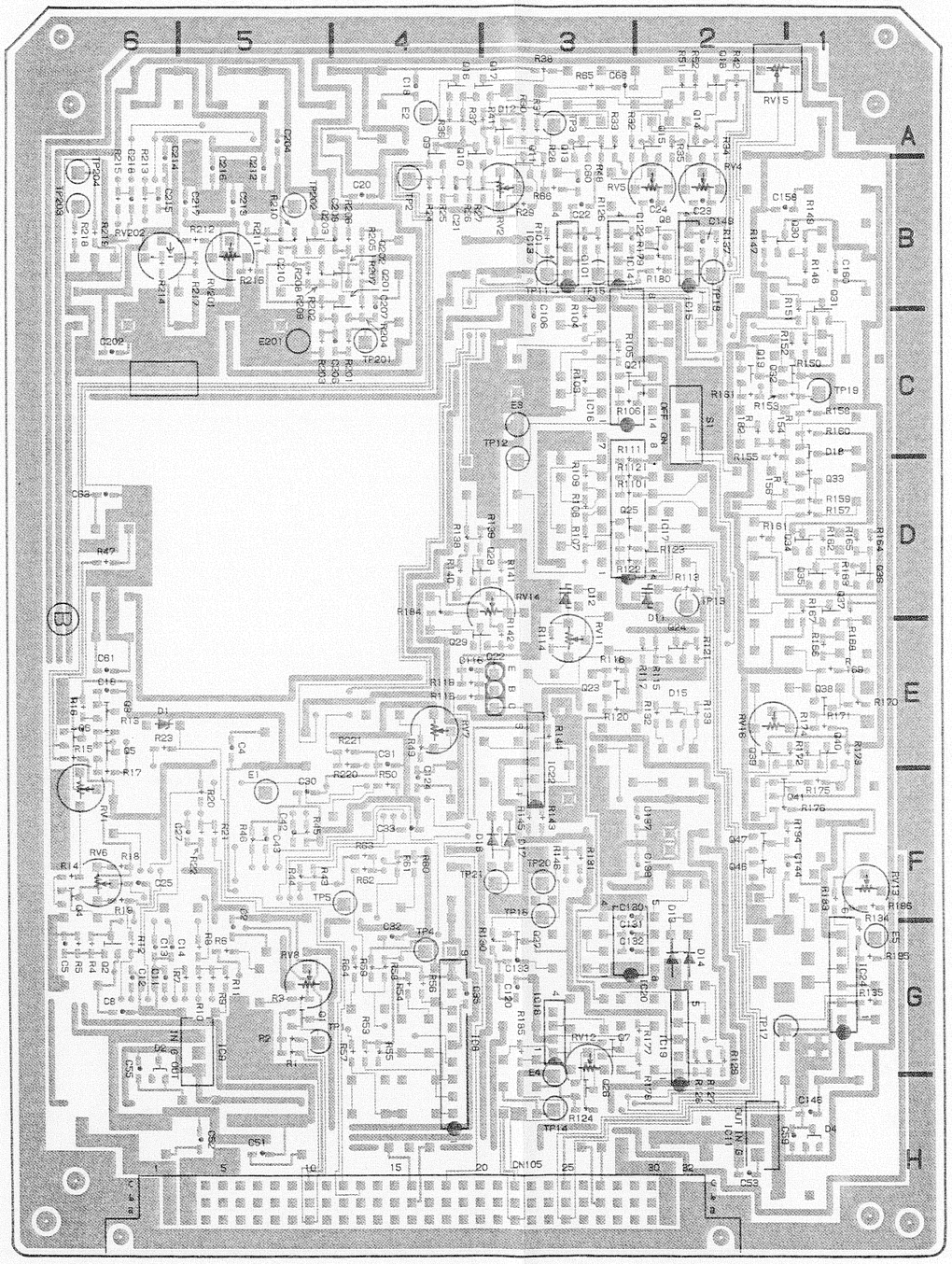

DEC-46P 1-628-649-12 B SIDE

B Side is the same as Solder Side.

G SIDE

DEC-42P(1/5); C DECODER

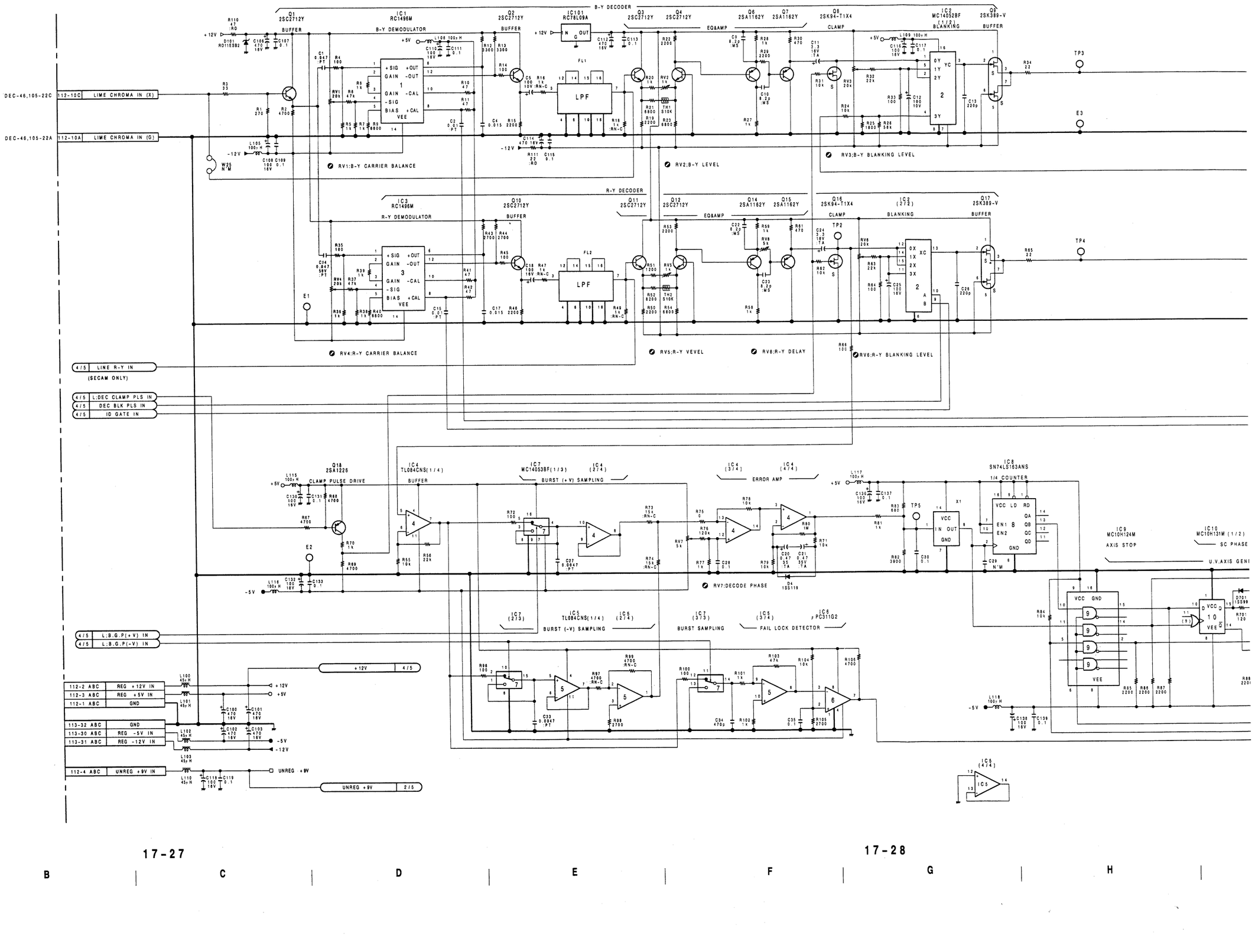

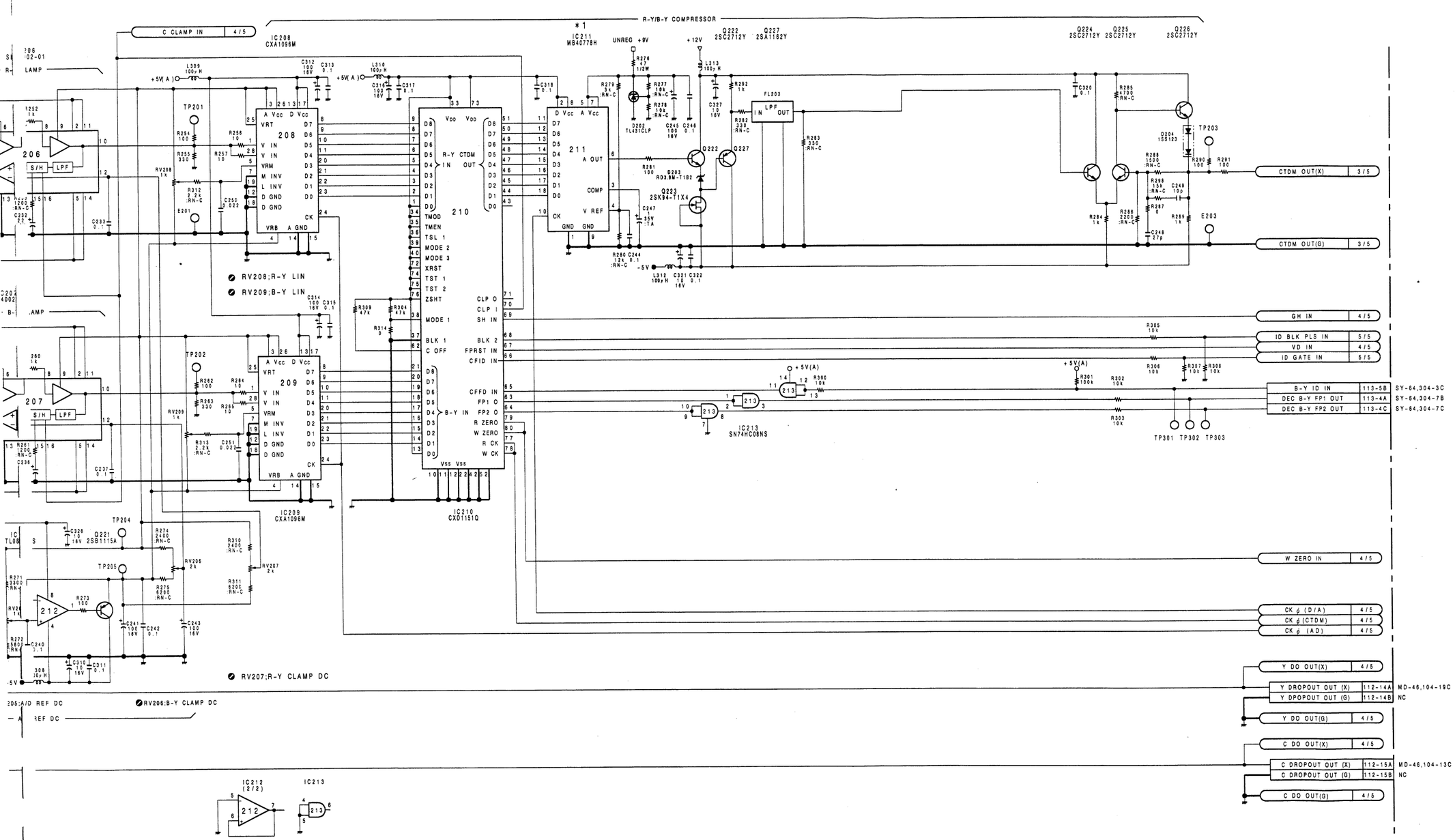

NOTE:

ADDRESS	MARK	CHANGE INFORMATION	SERIAL NO.
K1	* 1	IC TYPE CHANGE IC211:MB40778P TO MB40778H	#10054-

DEC-42P BOARD (2/5)

BOARD NO.1-625-947-13
BVW-85P(EK) ;#10001-

DEC-42P(3/5); Y SELECTOR, REF SYNC ADDER

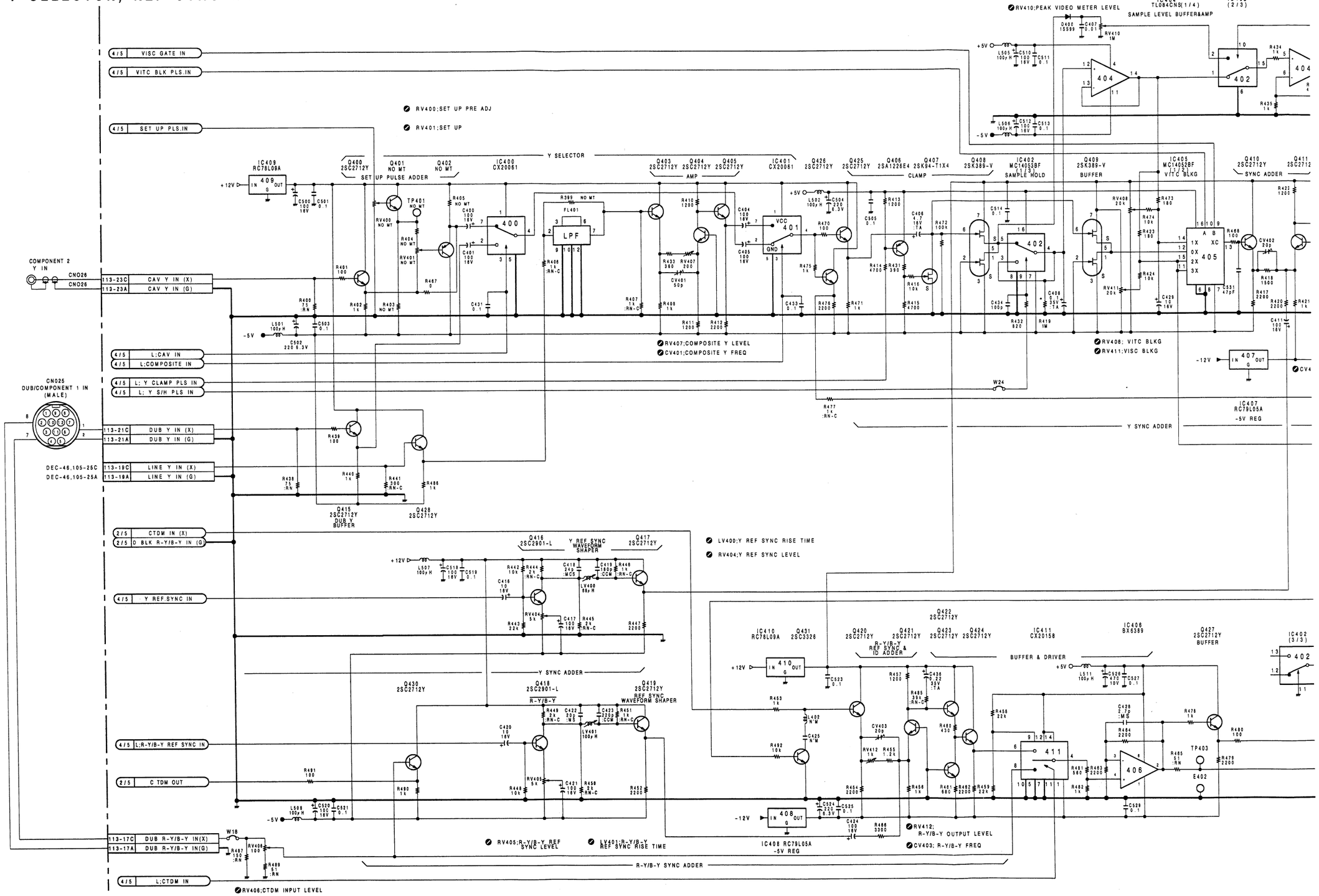

17-41 17-42

A B C D E F G H

DEC-42P(3/5)

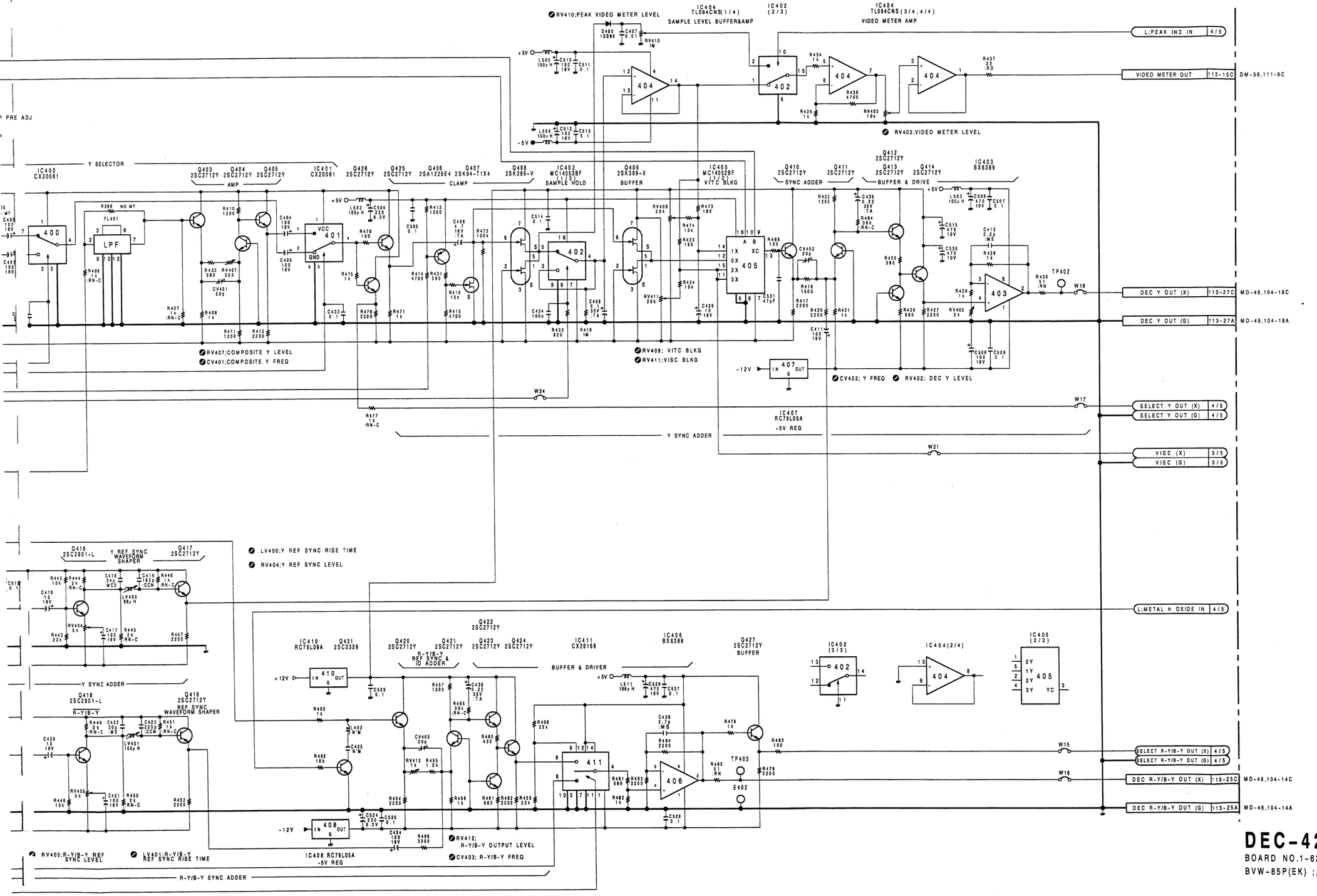

DEC-42P BOARD (3/5)

BOARD NO.1-625-947-13

BVW-85P(EK) ;#10001-

DEC-42P(4/5); TIMING GENERATOR

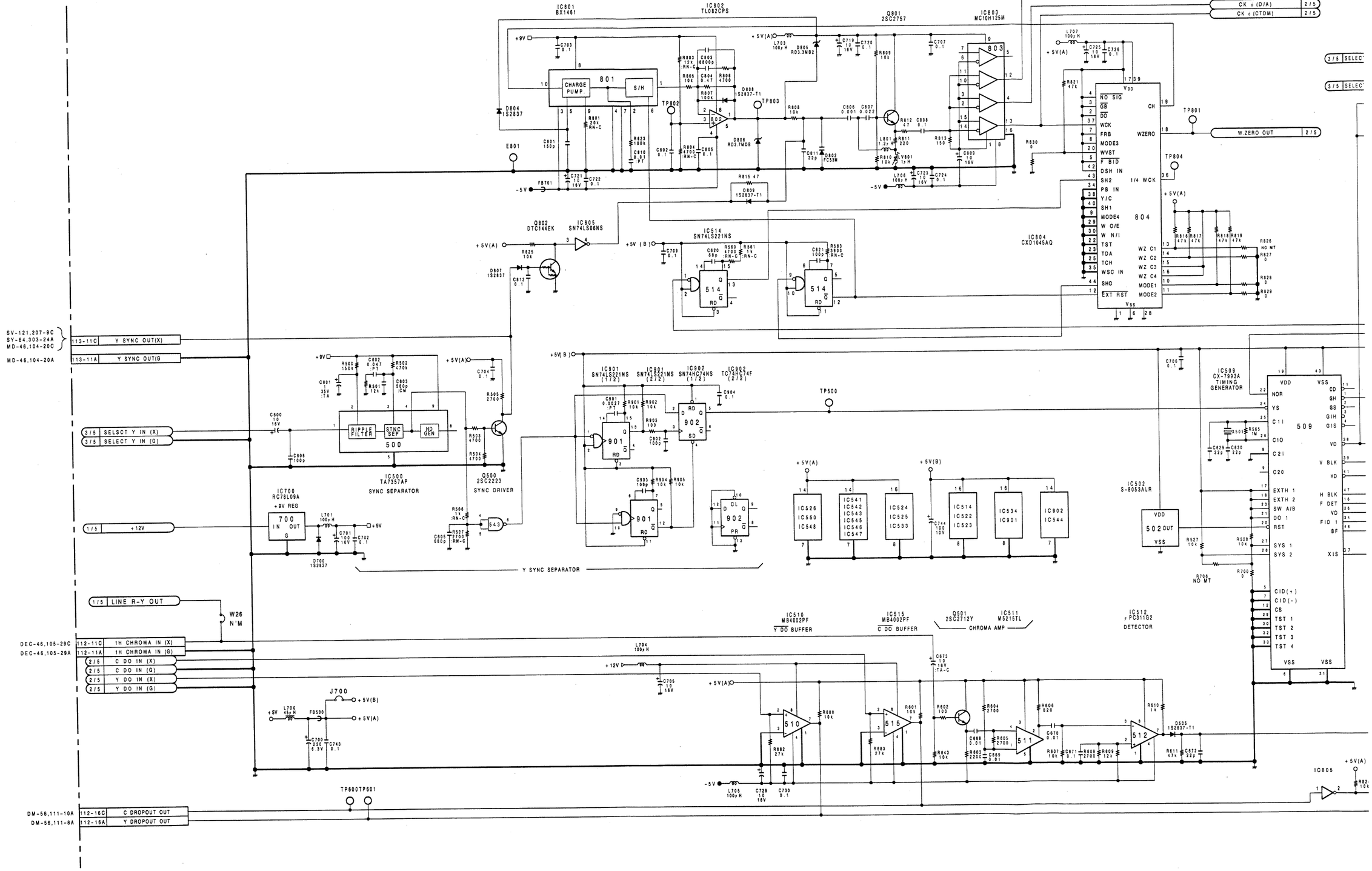

CHROMA SYNC SEPARATOR

R-Y/B-Y REF SYNC GENERATOR

IC533(2/2) IC526(2/2)

IC548 SN74HC08NS (1/2)

IC525 SN74LS123NS (2/2)

IC534(1/2) SN74LS221NS TIMING MMV

IC550 SN74HC08NS

IC548 (2/2)

IC542 MC14070BF

IC522 SN74LS221NS (1/2) IC522(2/2) Y REF SYNC GEN

IC523(1/2) SN74LS221NS WIDTH MMV

IC523(2/2) TIMING MMV

IC524(1/2) SN74LS221NS BLK PULSE GEN

IC524(2/2) B.G.P.GEN

IC525(1/2) SN74LS123NS

IC533(1/2) SN74LS221NS B&W DETECTOR

IC526 SN74HC74NS LALT GENERATOR

IC541 SN74HC32NS

IC547 SN74HC32NS

IC546 SN74HC08NS

IC545 SN74HC00NS

IC544 SN74HC00NS

IC543 SN74HC00NS

IC805

IC548(1/1)

IC802 2/2

IC513 TA7357AP

Q502 2SC2223

Q503 DTC144EK

TP504 TP505 TP508

D509 1S2837 D506 1S2837

CF-36P

DEC-42P(5/5) CN501 CN502

CN025 DUB/COMPONENT 1 IN (MALE)

RV511;OXIDE Y/C DELAY

RV502;Y VIDEO PHASE

RV503;Y REF SYNC WIDTH

RV504;METAL Y/C DELAY

RV505;WIDTH

RV512;C BLANKING WIDTH

CK φ(A/D)	2/5	
CK φ(D/A)	2/5	
CK φ(CTDM)	2/5	
3/5	SELECT R-Y/B-Y IN (X)	
3/5	SELECT R-Y/B-Y IN (G)	
C SYNC OUT(X)	13-12C	MD-46,104-12C
C SYNC OUT(G)	13-12A	MD-46,104-12A
VD OUT	2/5	
ID GATE OUT	1/5	
C CLAMP OUT	2/5	
C SYNC OUT	501-2	
F DET OUT	501-1	
Y SYNC OUT	502-13	
VD	502-6	
HD	501-9	
V SYNC OUT	501-6	
FRAME ID 1 OUT	501-4	
LALT OUT	501-5	
L;NON STD OUT	501-7	
L;CTDM OUT	502-2	
1/5	SC IN (X)	SC OUT (X) 502-7
1/5	SC IN (G)	SC OUT (G) 502-8
3/5	VISC GATE OUT	VISC GATE IN 502-14
+5V OUT	502-3	
+12V OUT	502-4	
GND	502-15	
GND	502-16	
-5V OUT	502-5	
L;V BLK OUT	113-14C	MD-46,104-24C
Y MD CLP OUT	113-13C	
L;DEC CLAMP PLS OUT	1/5	
GH OUT	2/5	
L;METAL H;OXIDE IN	113-6C	SY-64,304-2A/TBC-7,109-20C MD-46,104-15C/RP-46,911-3 DM-56,111-11C/RP-46,931-3 BF-28,540-4 AFM-1,202-27C AU-75,203-28A AU-76,204-28B TC-40,205-14A SV-122,208-20C
L;R-Y/B-Y REF SYNC OUT	3/5	
Y REF SYNC OUT	3/5	
VITC BLK PLS OUT	3/5	
H;VITC REC IN	113-10C	SY-64,303-27C
H;VITC GATE IN	113-10A	SY-64,303-27B
COMB OFF OUT	113-1C	DEC-46,105-18C
SET UP PLS OUT	3/5	
DEC BLK PLS OUT	1/5	
L;B/W MODE OUT	113-5C	SY-64,304-9C
L;AXIS STOP OUT	1/5	
L;NON STD/H;STD IN	113-5C	SY-64,304-4A
H;NON STD OUT	3/5	
L;Y CLAMP PLS OUT	3/5	
L;Y S/H PLS OUT	3/5	
L;Y R/B IN	112-14C	SW-144,512-2 SY-64,304-10B
L;CTDM IN	112-13C	CP-101,442-1
L;CAV IN	112-15C	
L;CTDM OUT	2/5	
L;CTDM OUT	3/5	
L;Y R/B OUT	2/5	
L;CAV OUT	2/5	
L;CAV OUT	3/5	
L;COMPOSITE OUT	3/5	
L;AGC/H;MANU IN	113-16C	MD-46,104-16C AFM-1,202-27A TC-40,205-21A V0-18,103-15B SV-122,208-21B BF-28,540-3
H;VIDEO REC/EE(MOD)IN	112-12C	
H;EE(MOD)OUT	2/5	
LALT OUT	1/5	
B.G.P(+V)OUT	1/5	
B.G.P(-V)OUT	1/5	
L;FAIL LOCK IN	1/5	
3/5	L;PEAK IND OUT	

MD-46,104-17C SY-64,304-10A SW-144,512-1

DEC-42P BOARD (4/5)

BOARD NO.1-635-947-13

BVW-85P(EK) ;#10001-

17-49 17-50

I J K L M N O

DEC-42P(5/5); COLOR FRAMING DETECTOR
CF-36P; COLOR FRAMING DETECTOR

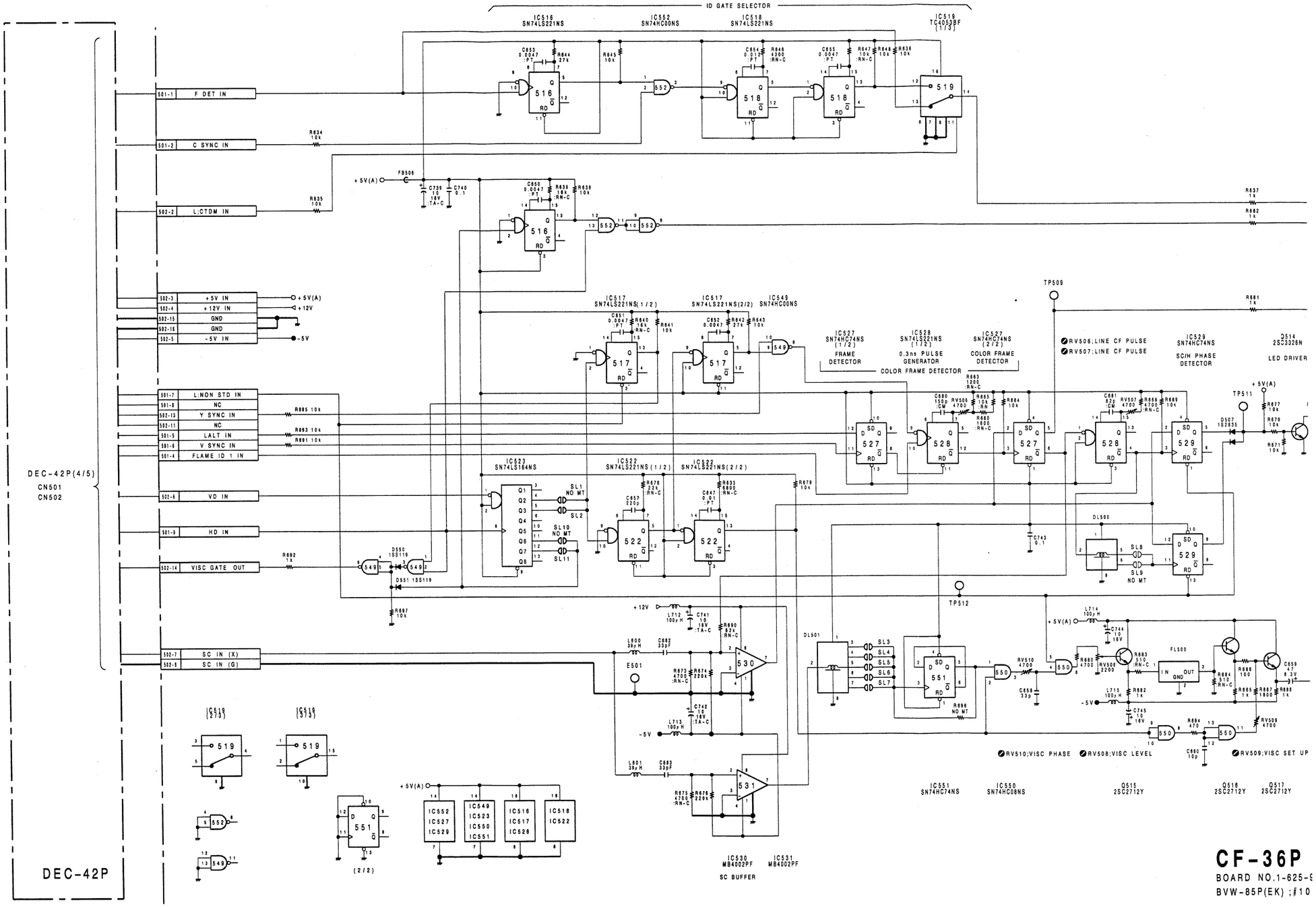

CF-36P
BOARD NO.1-625-9
BVW-85P(EK) ;f10

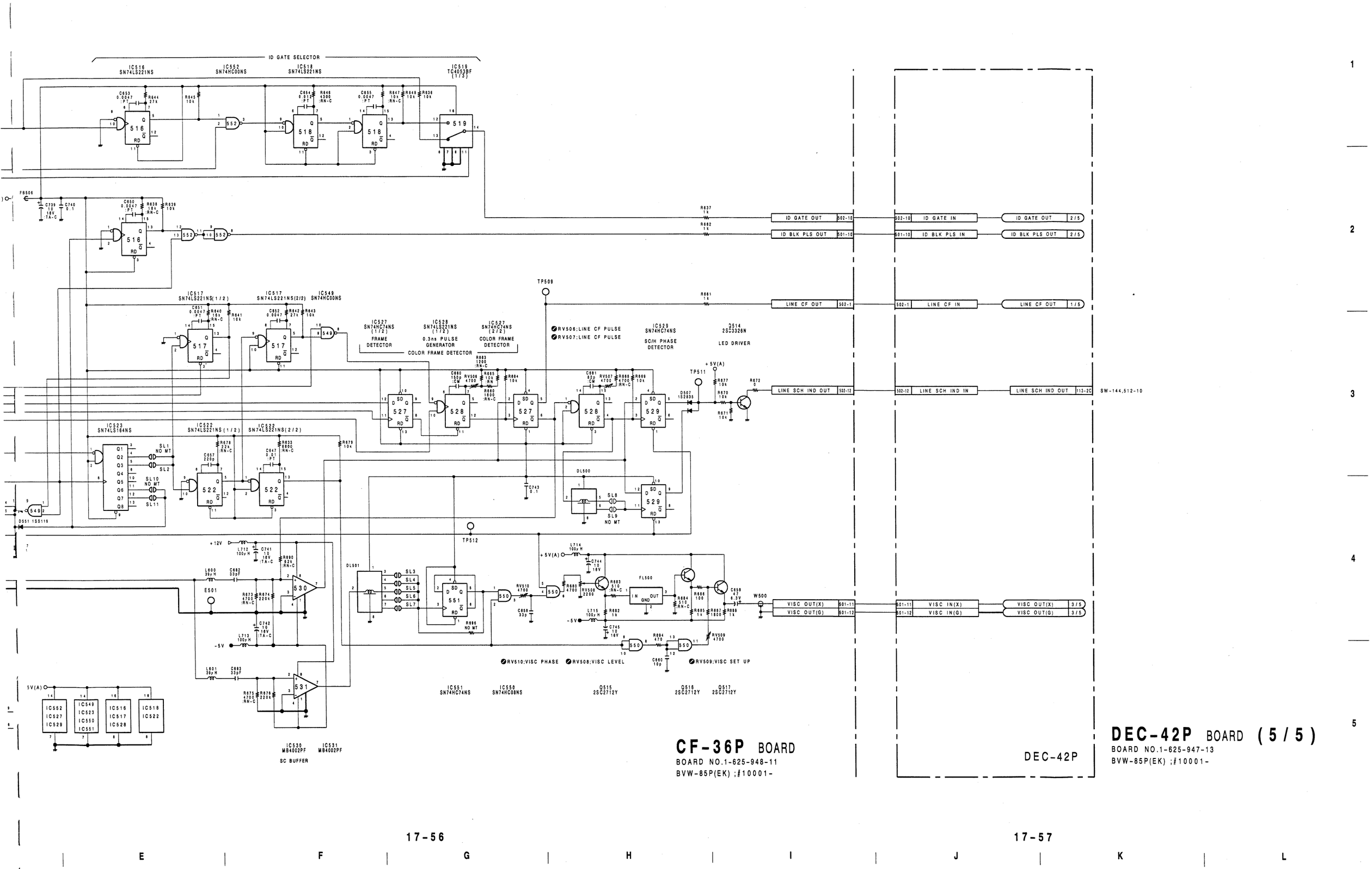

CF-36P BOARD
BOARD NO.1-625-948-11
BVW-85P(EK) ;#10001-

DEC-42P BOARD (5/5)
BOARD NO.1-625-947-13
BVW-85P(EK) ;#10001-

DEC-42P; C DECODER/COMPRESSOR,Y SELECTOR

DEC-42P(1-625-947-13)
BVW-85P

CN112	B-7	IC204	B-1	*Q1	B-7	*Q428	H-7	TP303	E-3		
CN113	F-7	IC205	B-1	*Q2	A-6	*Q430	J-1	TP402	H-3		
CN501	H-7	IC206	D-3	*Q3	A-5	*Q431	H-2	TP403	J-2		
CN502	D-6	IC207	D-1	*Q4	A-5	*Q500	H-5	TP500	F-4		
		IC208	E-2	*Q6	A-5	*Q501	D-7	TP504	G-5		
CV401	H-6	IC209	E-1	*Q7	A-4	*Q502	G-4	TP508	H-5		
CV402	J-4	IC210	F-1	*Q8	B-4	*Q503	H-5	TP600	D-7		
CV403	H-1	IC211	G-1	Q9	A-4	*Q801	D-4	TP601	D-7		
		IC212	D-2	*Q10	B-6	*Q802	D-4	TP801	E-4		
*D4	C-5	IC213	F-2	*Q11	B-5			TP802	C-5		
D101	A-7	IC214	B-2	*Q12	A-5	RV1	A-7	TP803	D-4		
D201	C-1	IC400	J-6	*Q14	B-5	RV2	A-5	TP804	E-4		
D202	F-2	IC401	J-5	*Q15	A-4	RV3	A-4				
*D203	G-2	IC402	H-5	*Q16	B-4	RV4	B-7	X1	E-5		
*D204	H-2	IC403	H-4	Q17	B-4	RV5	B-5	X501	G-5		
D400	H-5	IC404	H-5	*Q18	B-3	RV6	B-4				
*D505	E-6	IC405	J-5	*Q200	A-2	RV7	C-4				
*D506	D-7	IC406	J-1	*Q201	A-2	RV8	B-5				
*D509	F-6	IC407	H-4	*Q202	B-3	RV200	C-1				
*D700	F-3	IC408	H-2	*Q203	C-3	RV201	A-2				
D701	C-7	IC409	J-7	*Q204	C-3	RV202	A-1				
D802	D-5	IC410	H-1	*Q208	A-1	RV203	D-2				
*D804	D-4	IC411	J-1	*Q209	A-1	RV204	D-1				
*D805	D-5	IC500	G-4	*Q210	B-2	RV205	C-2				
*D807	D-4	IC502	F-4	*Q211	C-1	RV206	D-2				
*D808	D-5	IC509	F-5	*Q212	C-1	RV207	D-2				
*D809	D-4	IC510	D-5	Q219	C-2	RV208	E-2				
		IC511	D-6	Q220	C-2	RV209	E-2				
E1	B-7	IC512	D-6	*Q221	D-2	RV402	J-4				
E2	B-3	IC513	G-4	*Q222	G-2	RV403	H-5				
E3	A-3	IC514	F-4	*Q223	G-2	RV404	H-3				
E201	E-3	IC515	D-5	*Q224	G-1	RV405	H-2				
E203	H-1	IC522	E-6	*Q225	G-1	RV406	J-1				
E402	J-2	IC523	E-6	*Q226	G-2	RV407	H-6				
		IC524	F-6	*Q227	G-2	RV408	J-4				
FB500	C-7	IC525	G-6	*Q400	J-6	RV410	J-4				
FB701	C-4	IC526	G-6	*Q403	H-6	RV411	J-4				
		IC533	E-7	*Q404	H-6	RV412	H-1				
FL1	A-5	IC534	F-5	*Q405	J-6	RV502	E-5				
FL2	B-5	IC541	H-5	*Q406	J-5	RV503	E-5				
FL201	C-2	IC542	G-5	*Q407	J-5	RV504	D-7				
FL202	C-1	IC543	E-5	Q408	H-5	RV505	D-7				
FL203	H-3	IC544	G-7	Q409	J-5	RV511	F-5				
FL401	H-6	IC545	F-6	*Q410	J-4	RV512	G-5				
		IC546	G-7	*Q411	J-4						
IC1	A-6	IC547	E-7	*Q412	J-4	S500	E-7				
IC2	A-4	IC548	F-3	*Q413	J-3						
IC3	B-6	IC550	D-7	*Q414	J-4	TH1	A-5				
IC4	C-4	IC700	F-3	*Q415	J-6	TH2	B-5				
IC5	C-3	IC801	C-4	Q416	H-3						
IC6	C-3	IC802	C-5	*Q417	J-3	TP2	B-4				
IC7	C-4	IC803	E-4	Q418	H-3	TP3	A-3				
IC8	C-5	IC804	F-4	*Q419	J-2	TP4	B-3				
IC9	C-6	IC805	E-4	*Q420	H-1	TP5	C-5				
IC10	C-6	IC901	G-4	*Q421	H-1	TP201	E-2				
IC11	B-6	IC902	G-3	*Q422	H-1	TP202	D-1				
IC101	B-3			*Q423	H-1	TP203	H-1				
IC200	A-2	LV400	J-3	*Q424	H-1	TP204	D-1				
IC201	B-2	LV401	J-2	*Q425	J-5	TP205	D-2				
IC202	B-2	LV801	D-3	*Q426	J-5	TP301	F-3				
IC203	A-1			*Q427	J-2	TP302	F-3				

* : SOLDERING SIDE

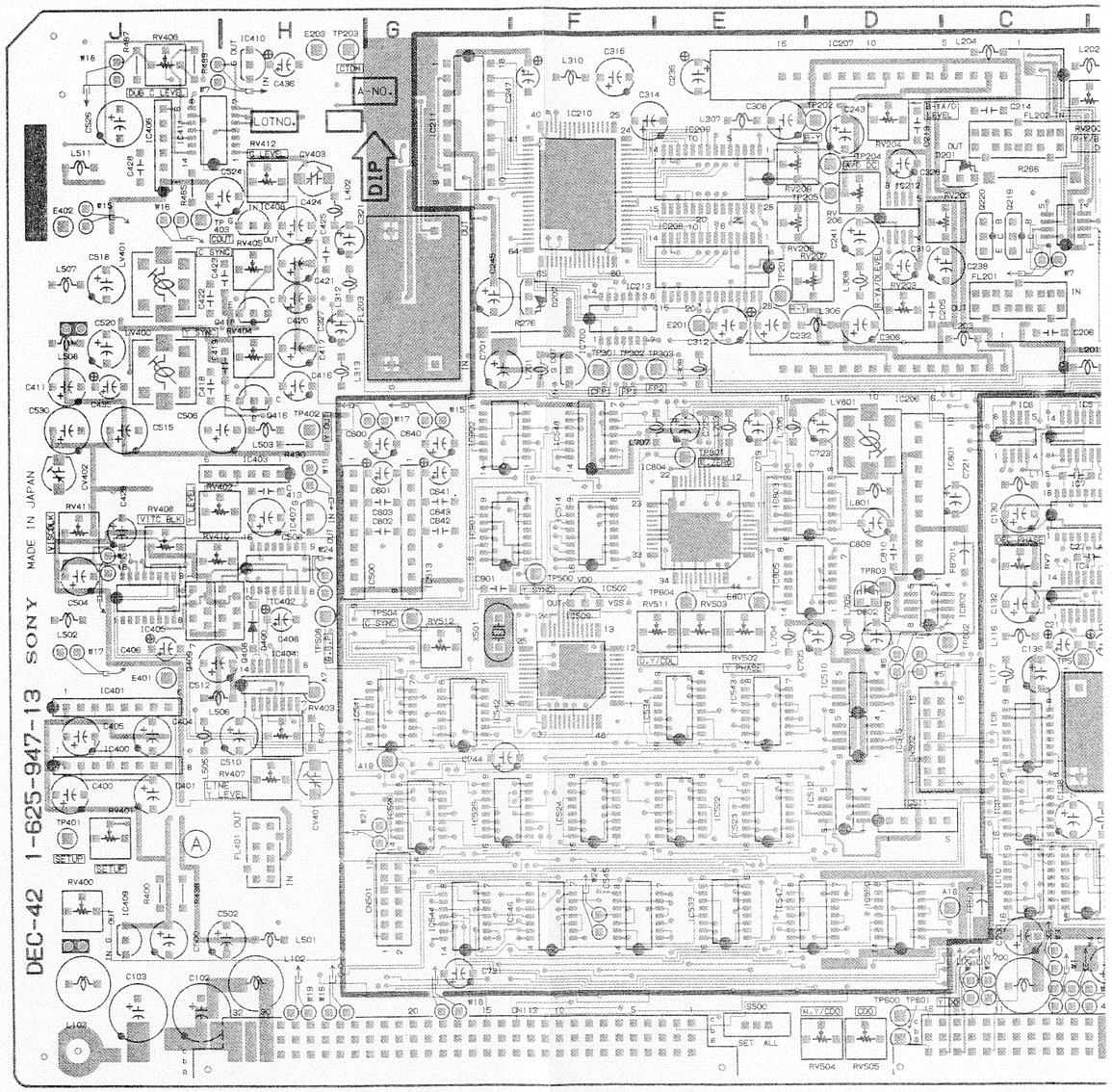

A Side is t

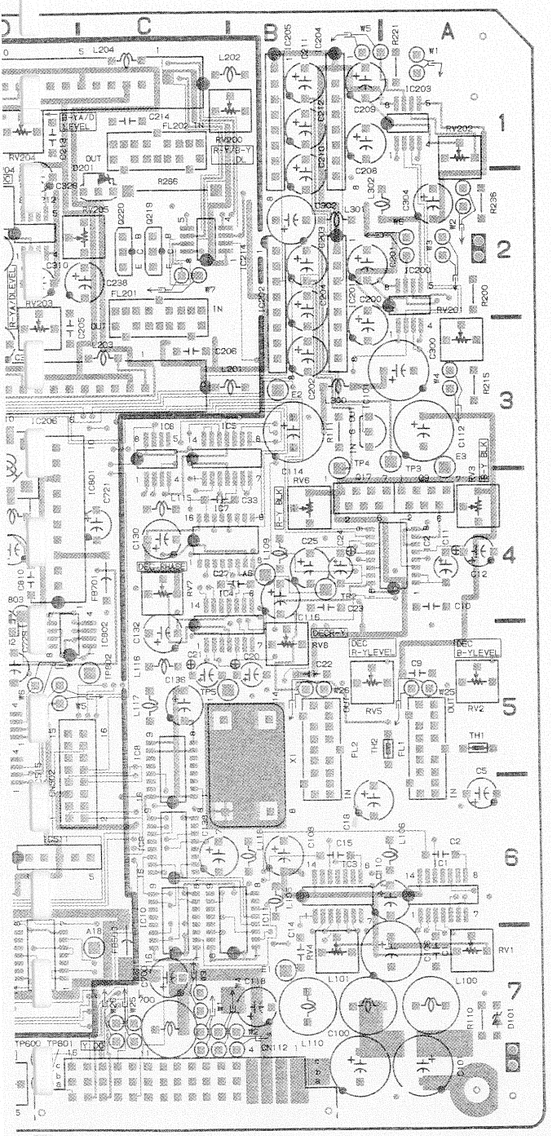

DEC-42P 1-625-947-13 A SIDE

A Side is the same as Component Side.

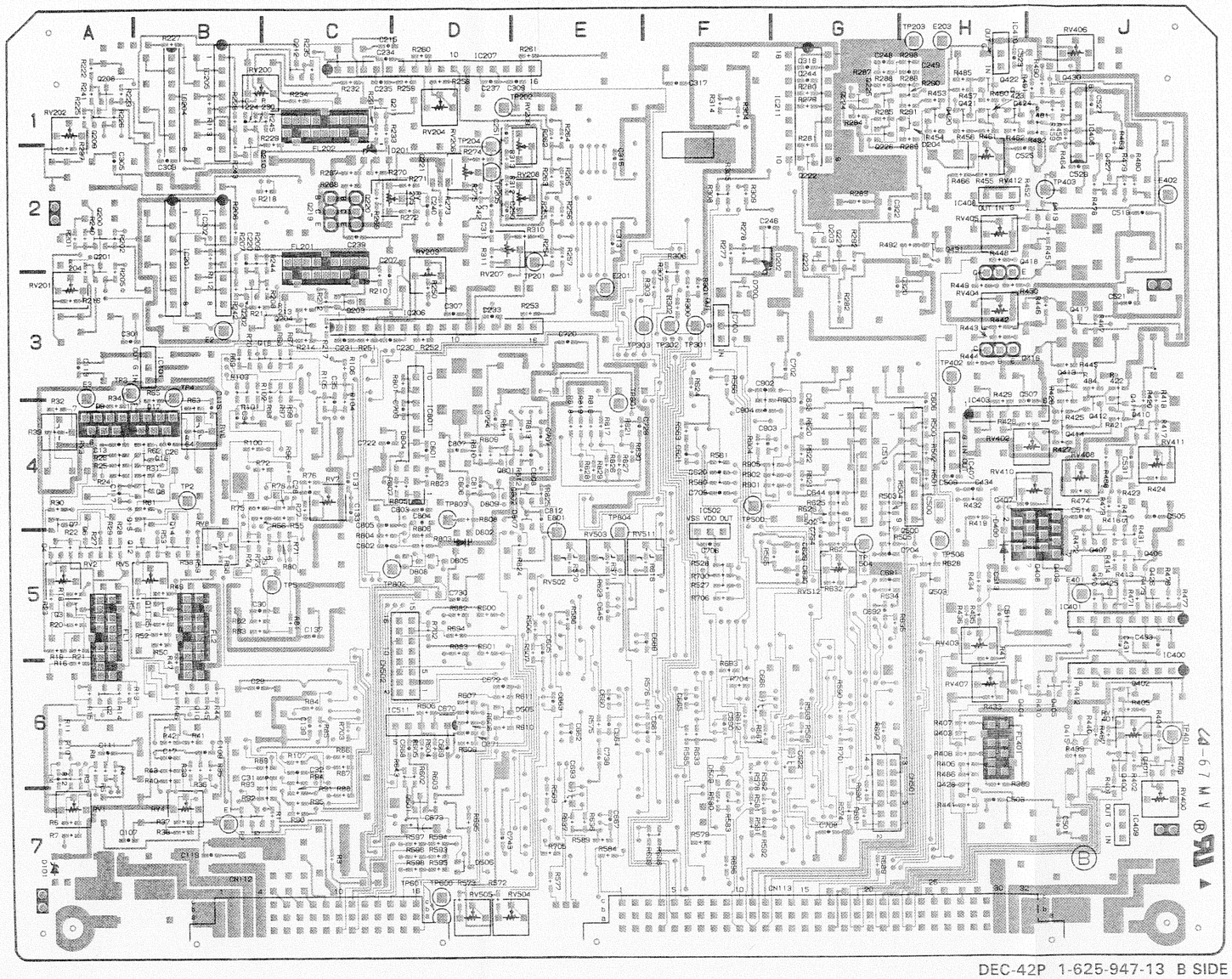

DEC-42P 1-625-947-13 B SIDE

B Side is the same as Solder Side.

CF-36P; COLOR FRAMING DETECTOR

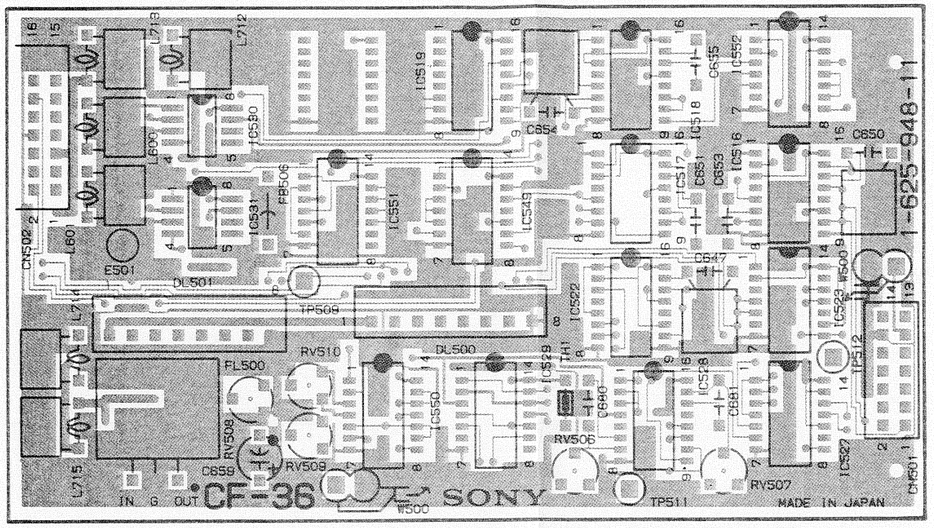

MD-46P(1/2); Y MODULATOR

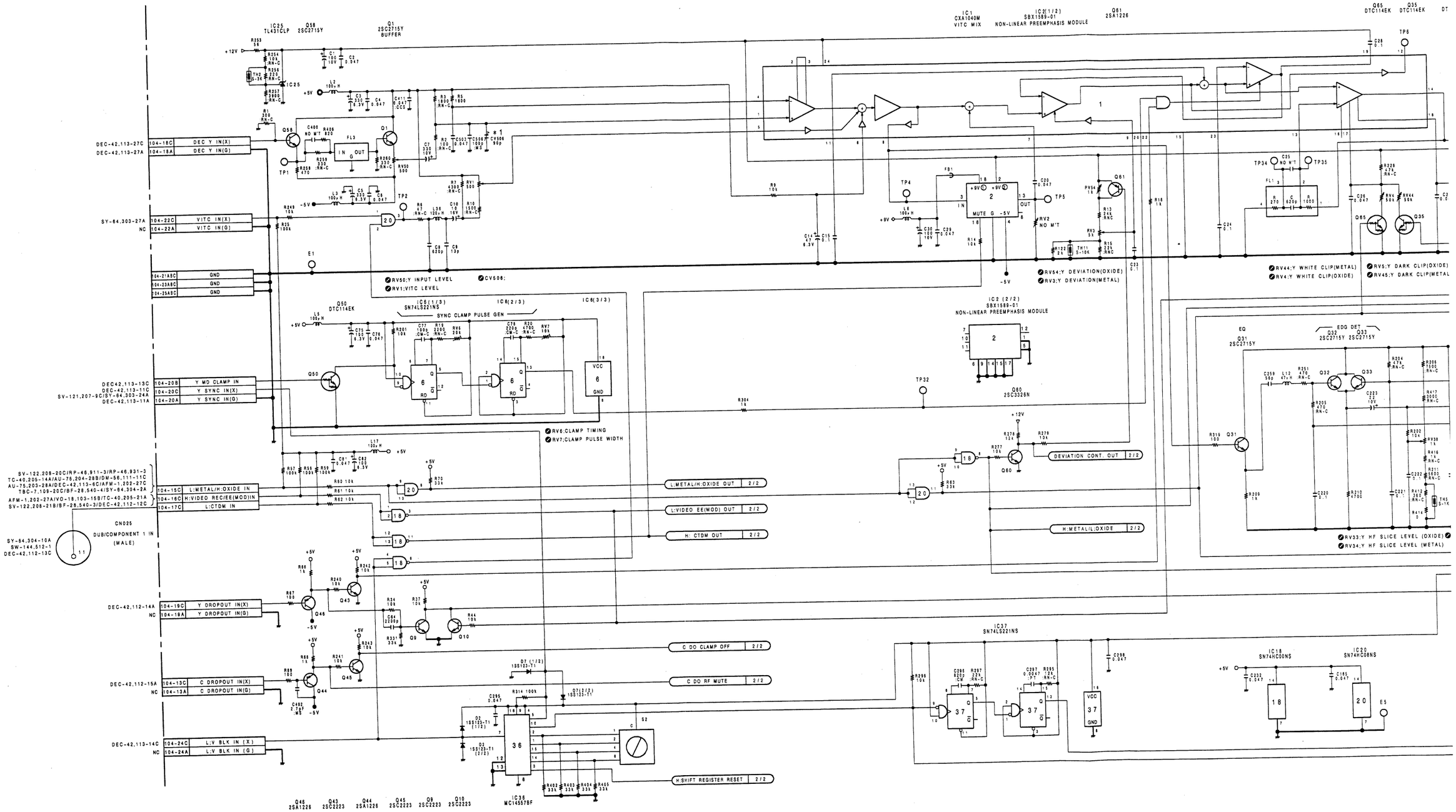

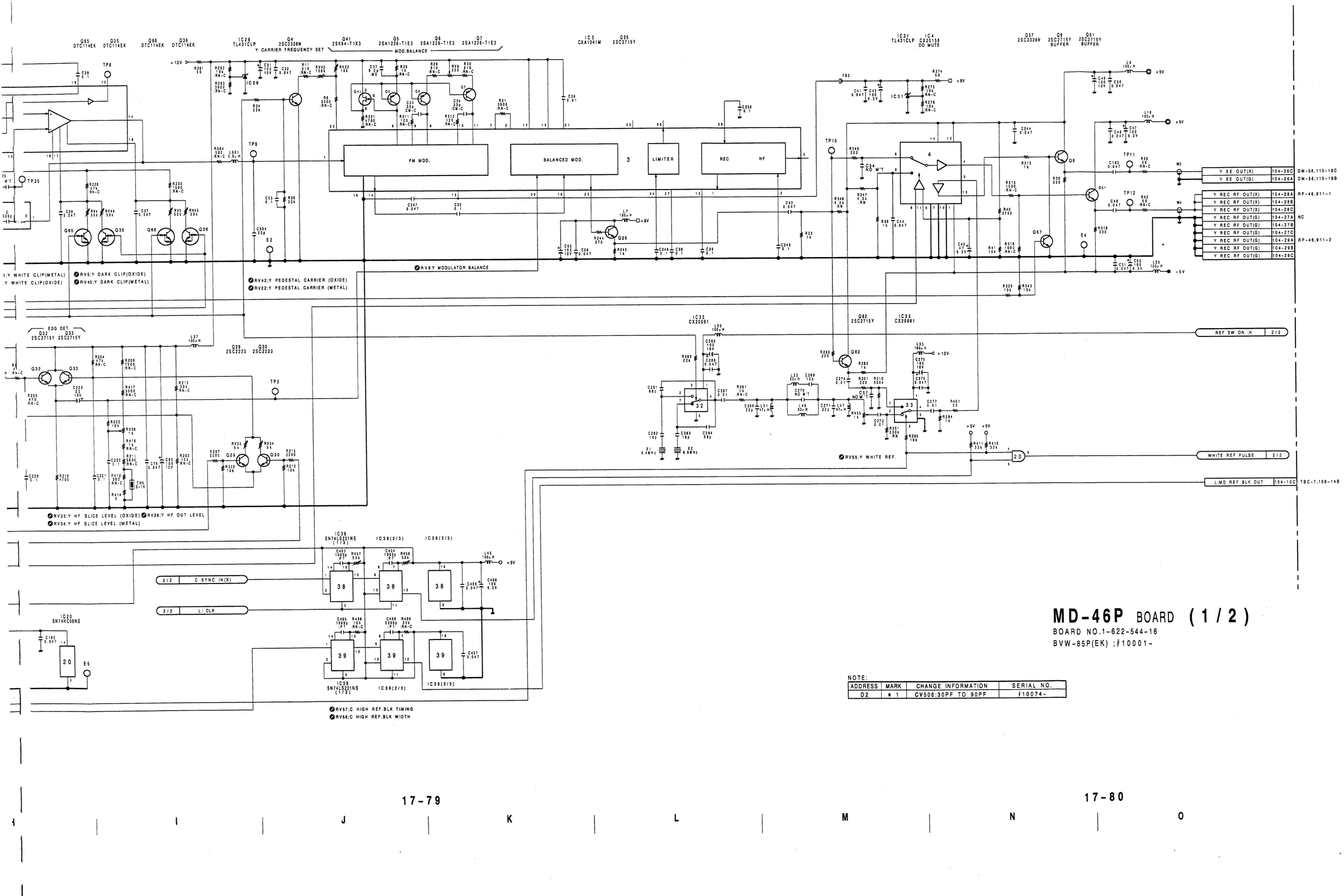

MD-46P BOARD (1/2)

BOARD NO.1-622-544-16

BVW-85P(EK) ;#10001-

NOTE:

ADDRESS	MARK	CHANGE INFORMATION	SERIAL NO.
D2	* 1	CV506:30PF TO 90PF	#10074-

MD-46P(2/2); C MODULATOR

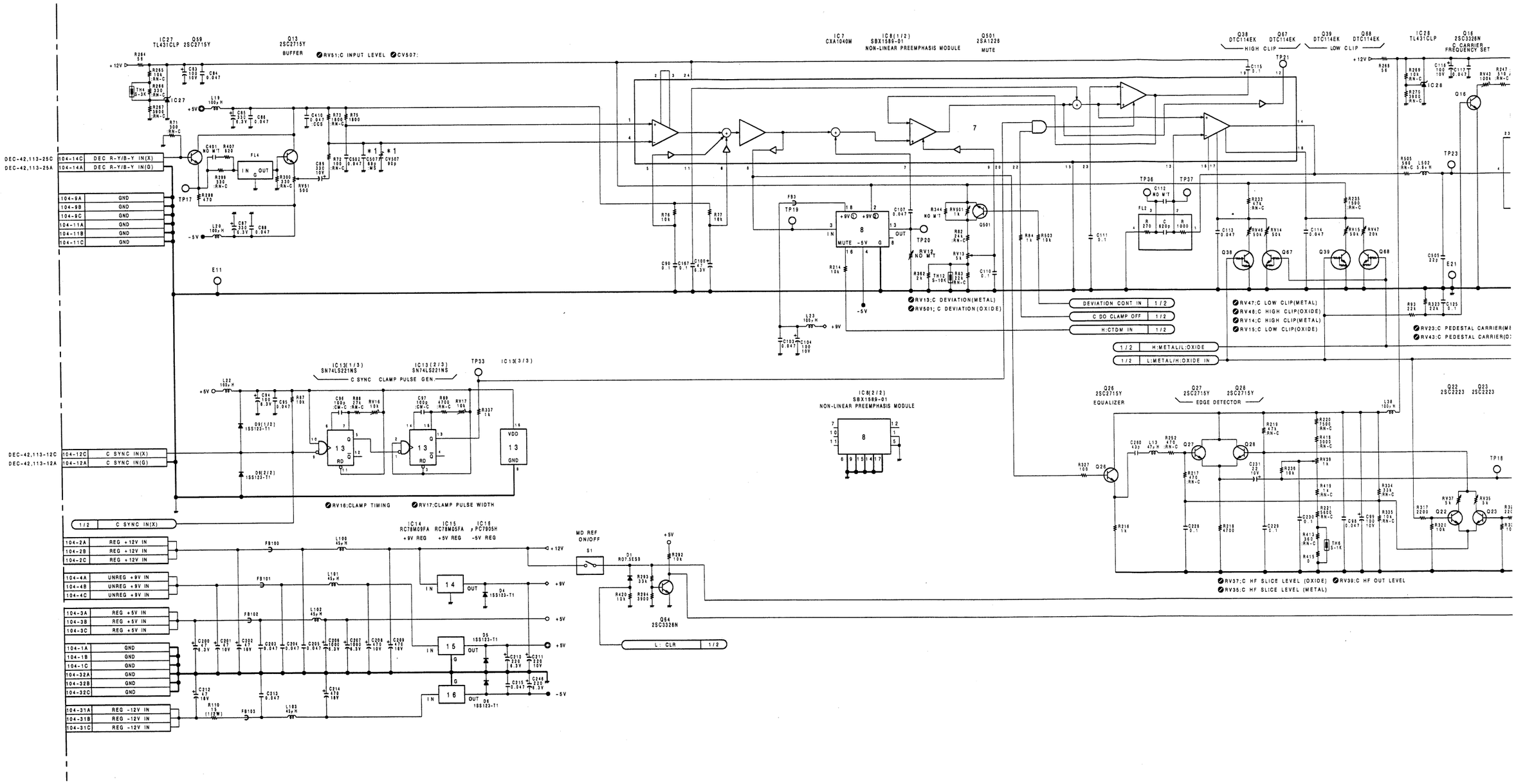

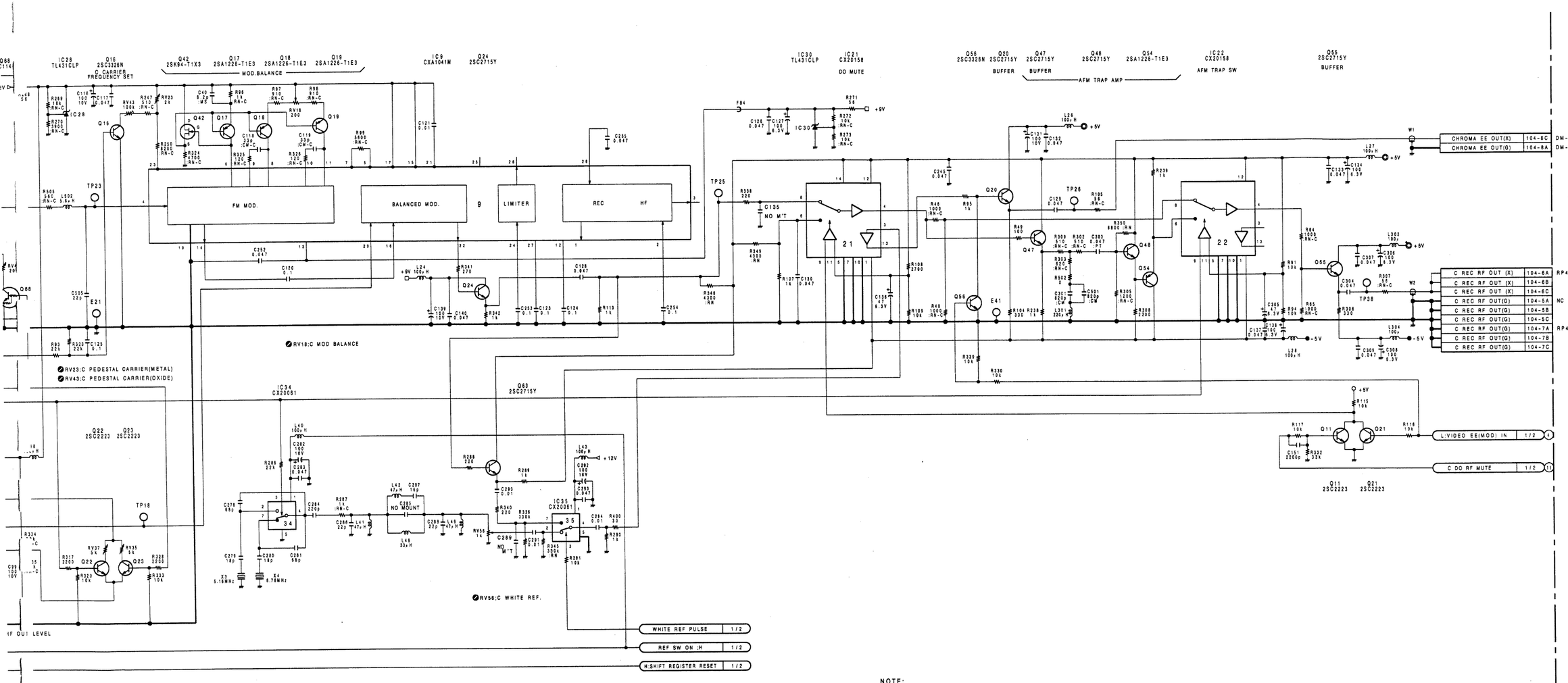

NOTE:

ADDRESS	MARK	CHANGE INFORMATION	SERIAL NO.
C2	* 1	CV507:30PF TO 90PF C507:100PF TO 68PF	#10074-

MD-46P BOARD (2/2)

BOARD NO.1-622-544-16

BVW-85P(EK) ;#10001-

MD-46P(1-622-544-16)

BVW-85P

CN104	G-3	IC36	G-2	*Q68	D-4	TP20	E-5
		IC37	F-2			TP21	C-5
CV506	D-3	IC38	F-2	RV1	D-2	TP23	B-5
CV507	D-5	IC39	F-1	RV3	A-3	TP25	A-4
				RV4	C-2	TP26	B-3
D1	F-2	*Q1	E-2	RV5	D-2	TP32	F-3
*D2	G-3	*Q4	A-1	RV6	G-3	TP33	F-4
*D4	F-5	*Q5	B-3	RV7	F-3	TP34	C-2
*D5	F-4	*Q6	B-3	RV8	A-2	TP35	C-3
*D6	F-1	*Q7	A-3	RV13	A-5	TP36	C-5
*D7	G-2	*Q8	B-1	RV14	C-4	TP37	C-5
*D9	F-4	*Q9	G-2	RV15	D-5	TP38	B-4
		*Q10	G-2	RV16	G-4		
E1	G-2	*Q11	G-4	RV17	F-4	X1	D-1
E2	A-1	*Q13	E-5	RV18	A-5	X2	D-1
E4	B-3	*Q16	A-4	RV22	A-2	X3	E-3
E5	F-3	*Q17	B-5	RV23	A-4	X4	E-3
E11	F-5	*Q18	B-5	RV33	C-1		
E21	D-5	*Q19	A-5	RV34	C-2		
E41	A-4	*Q20	A-4	RV35	C-4		
		*Q21	G-3	RV37	C-4		
FB1	E-3	*Q22	C-4	RV38	B-2		
FB2	A-3	*Q23	C-4	RV39	B-5		
FB3	E-5	*Q24	A-5	RV42	A-2		
FB4	A-5	*Q25	A-2	RV43	A-4		
FB100	G-5	*Q26	C-5	RV44	C-2		
FB101	G-5	*Q27	C-5	RV45	D-1		
FB102	G-5	*Q28	C-5	RV46	C-5		
FB103	G-1	*Q29	C-2	RV47	D-4		
		*Q30	C-2	RV50	E-3		
FL1	C-3	*Q31	C-2	RV51	E-5		
FL2	C-5	*Q32	C-2	RV54	A-3		
FL3	D-2	*Q33	C-2	RV55	C-1		
FL4	D-4	*Q35	D-2	RV56	D-3		
		*Q36	D-2	RV57	F-2		
IC1	D-3	*Q38	C-4	RV58	G-2		
IC2	D-3	*Q39	D-5	RV501	A-5		
IC3	A-2	*Q41	B-3				
IC4	B-1	*Q42	B-5	S1	A-3		
IC6	F-3	*Q43	G-2	S2	G-2		
IC7	D-5	*Q44	G-4				
IC8	E-5	*Q45	G-4	TH2	D-2		
IC9	A-5	*Q46	G-2	TH4	D-4		
IC13	F-3	*Q47	A-4	TH5	B-2		
IC14	F-5	*Q48	B-4	TH6	B-4		
IC15	F-4	*Q50	F-3	TH11	A-3		
IC16	F-1	*Q51	A-1	TH12	A-5		
IC18	G-3	*Q54	B-4				
IC20	G-4	*Q55	B-4	TP1	E-3		
IC21	A-4	*Q56	B-4	TP2	E-1		
IC22	B-4	*Q57	B-1	TP3	C-2		
IC25	D-2	*Q58	E-3	TP4	C-3		
IC26	B-3	*Q59	E-5	TP5	E-3		
IC27	D-4	*Q60	E-4	TP6	C-3		
IC28	B-5	*Q61	A-3	TP8	B-3		
IC30	B-5	*Q62	B-2	TP10	A-1		
IC31	B-3	*Q63	C-4	TP11	A-1		
IC32	D-1	*Q64	F-2	TP12	A-1		
IC33	C-1	*Q65	C-2	TP17	E-5		
IC34	E-4	*Q66	D-2	TP18	C-5		
IC35	C-4	*Q67	D-4	TP19	C-5		

* : SOLDERING SIDE

MD-46P; Y/C MODULATOR

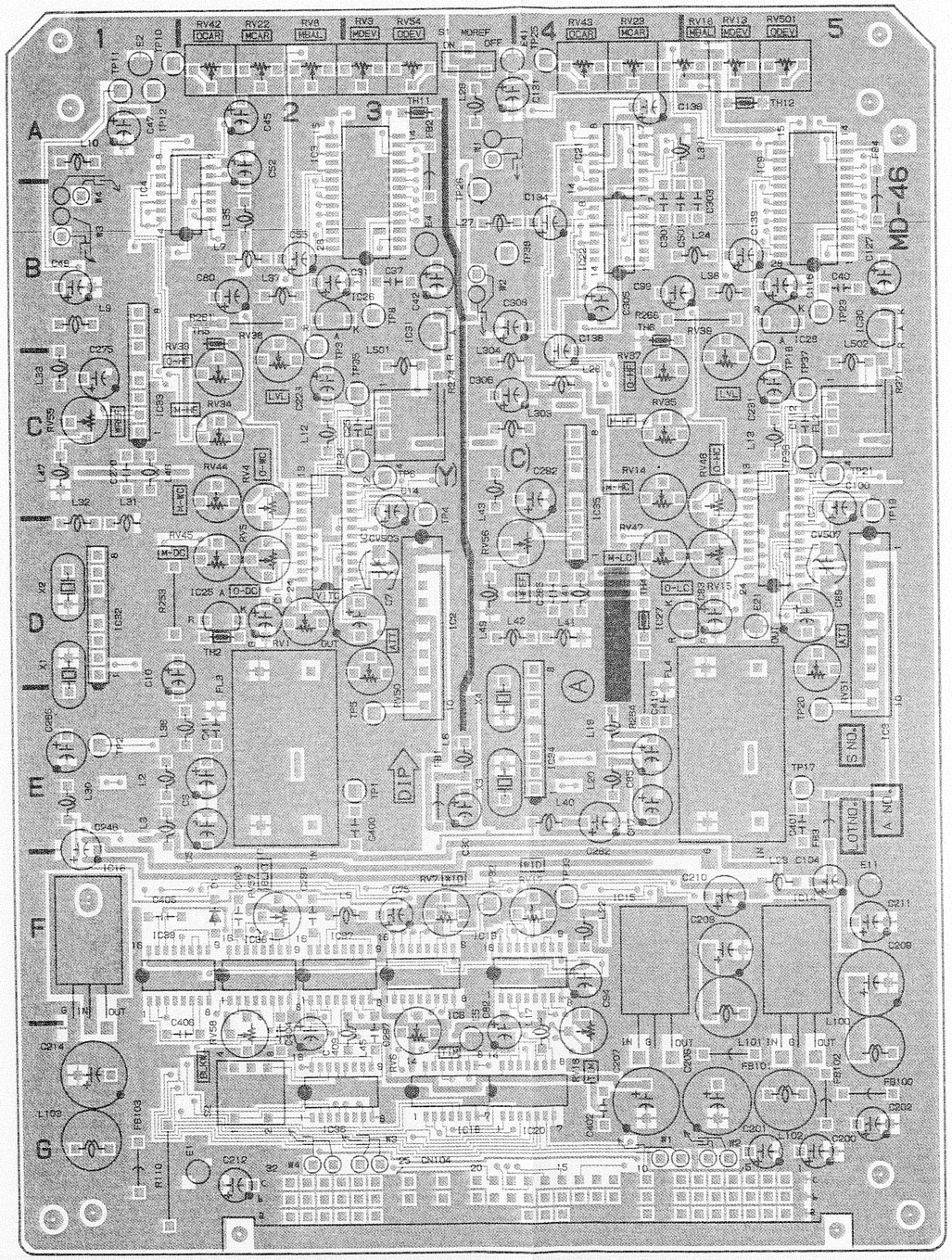

MD-46P 1-622-544-16 A SIDE

A Side is the same as Component Side.

MD-46P

MD-46P; Y/C MODULATOR

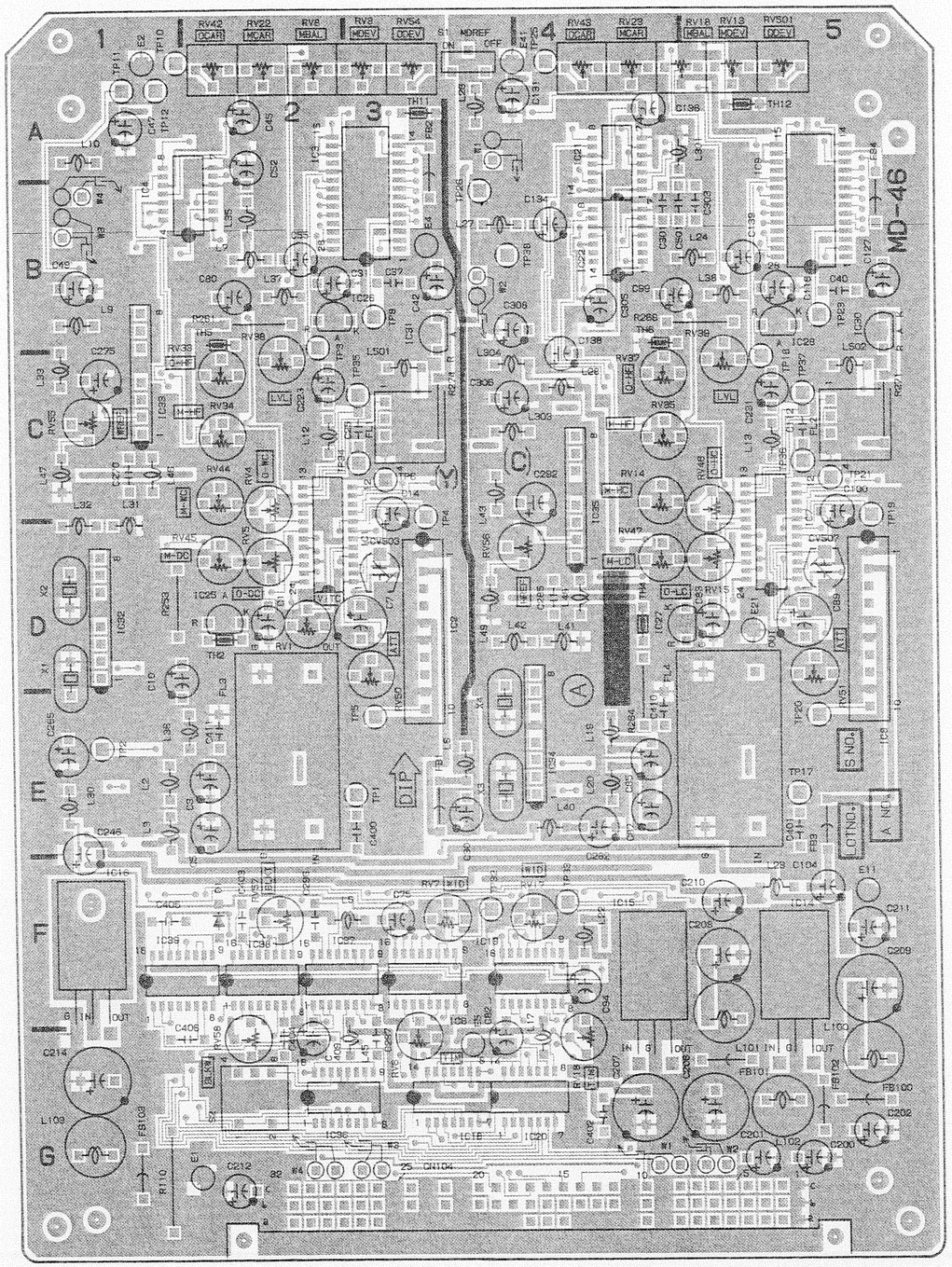

MD-46P 1-622-544-16 A SIDE

A Side is the same as Component Side.

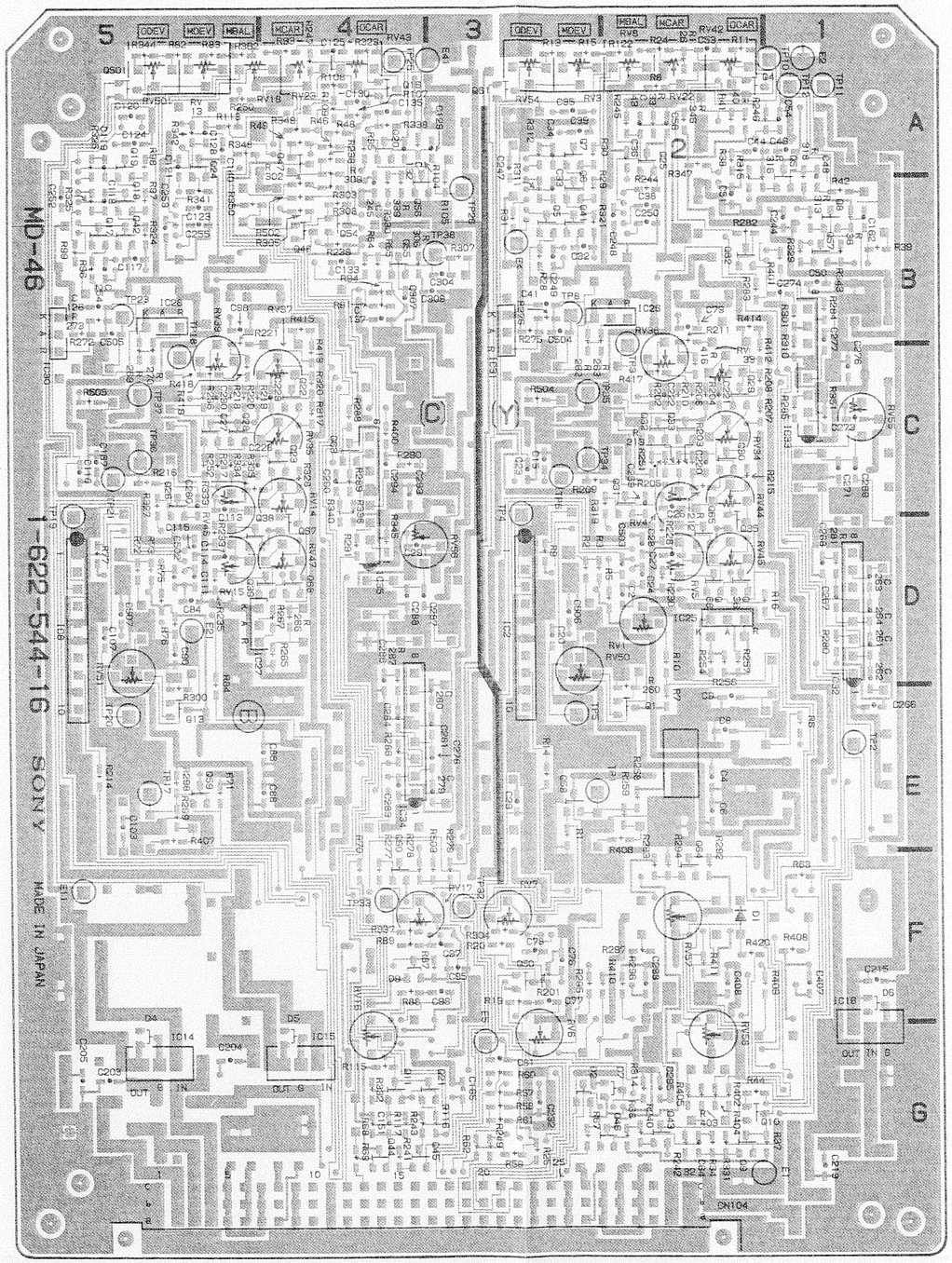

MD-46P 1-622-544-16 B SIDE

B Side is the same as Solder Side.

RP-46P(1/3); Y REC AMPLIFIER
DUS-362;PCM DETECT CIRCUIT

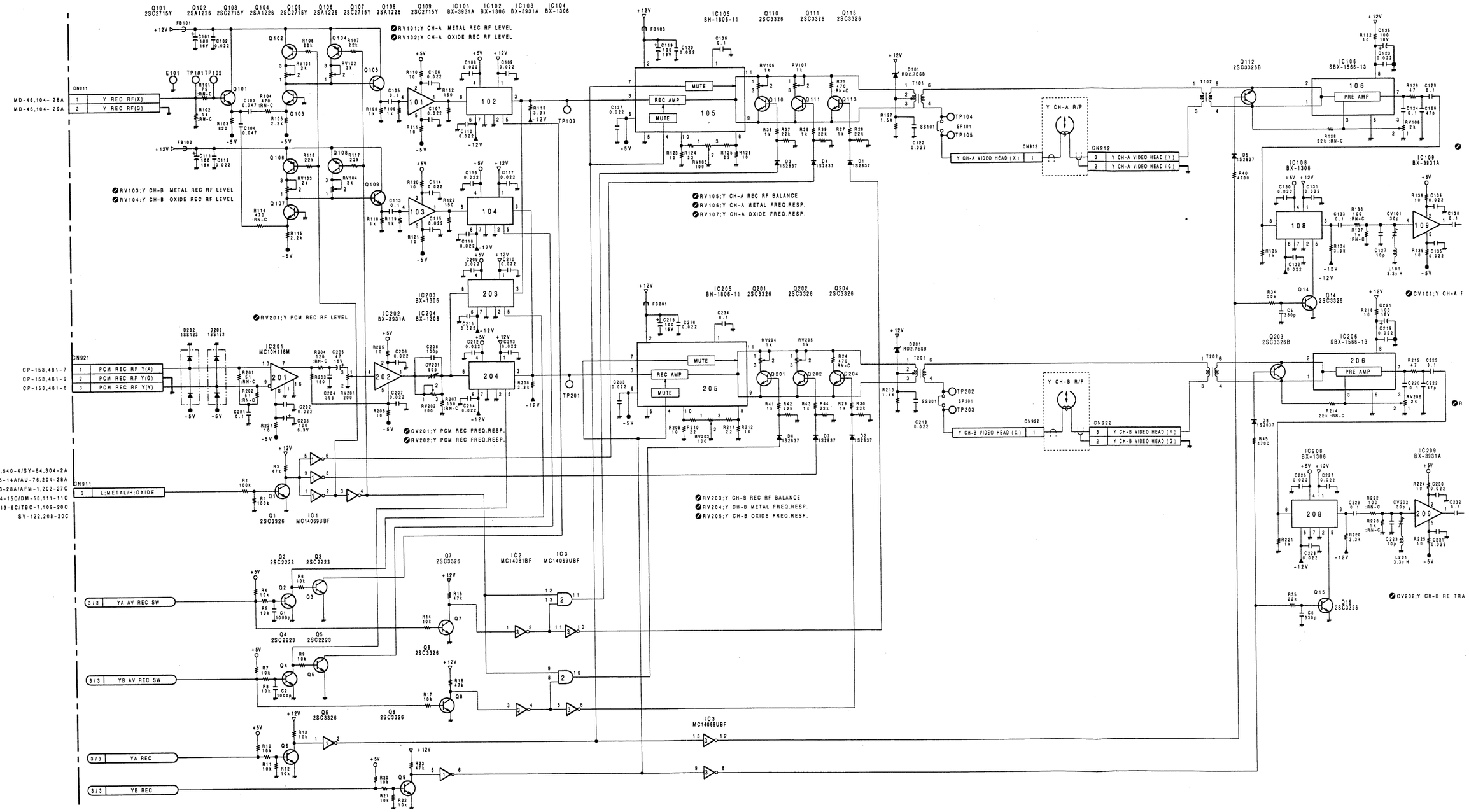

17-103 17-104

A B C D E F G H

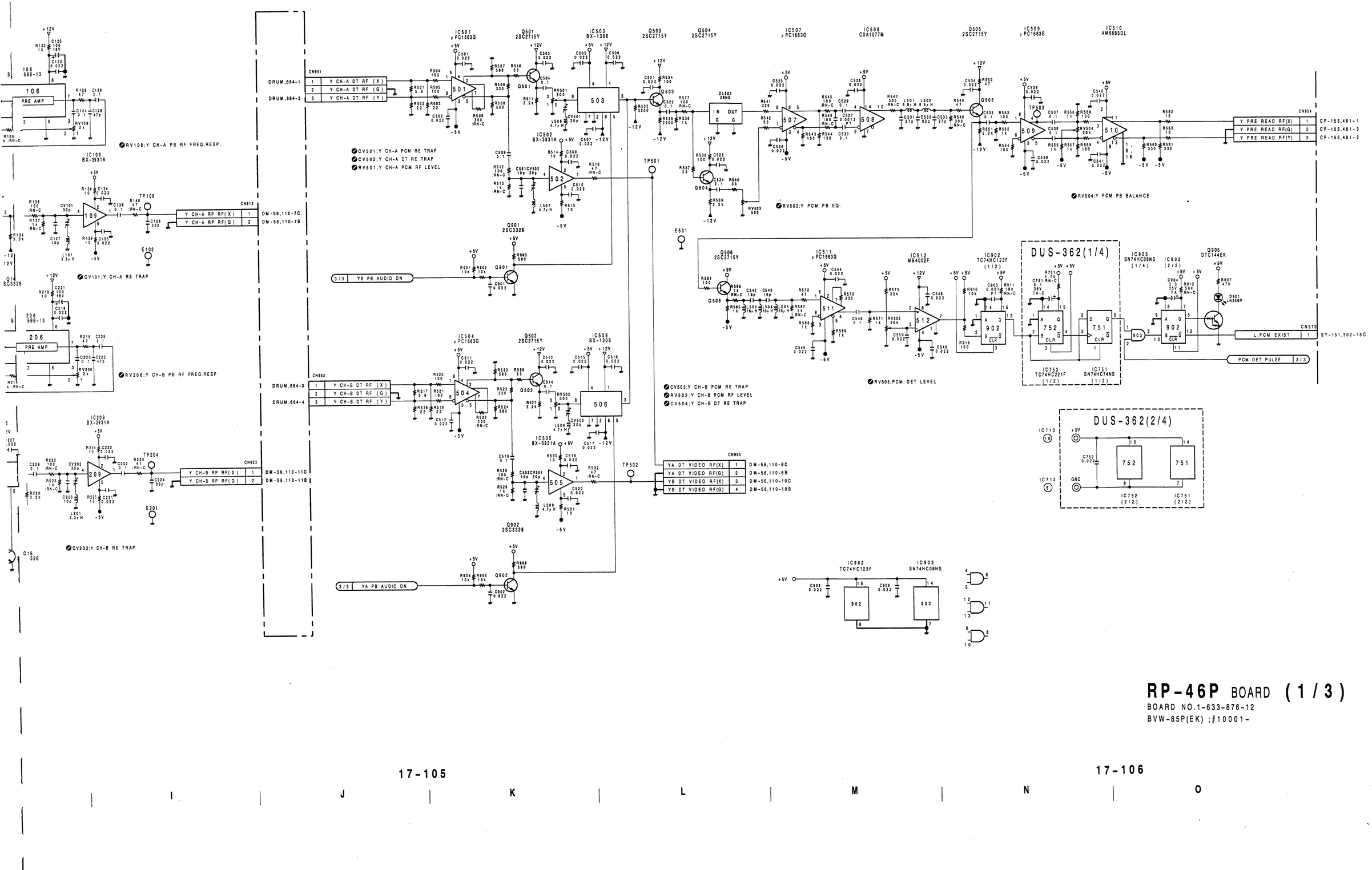

RP-46P BOARD **(1/3)**

BOARD NO.1-633-876-12

BVW-85P(EK) ;#10001-

RP-46P(2/3); C REC AMPLIFIER

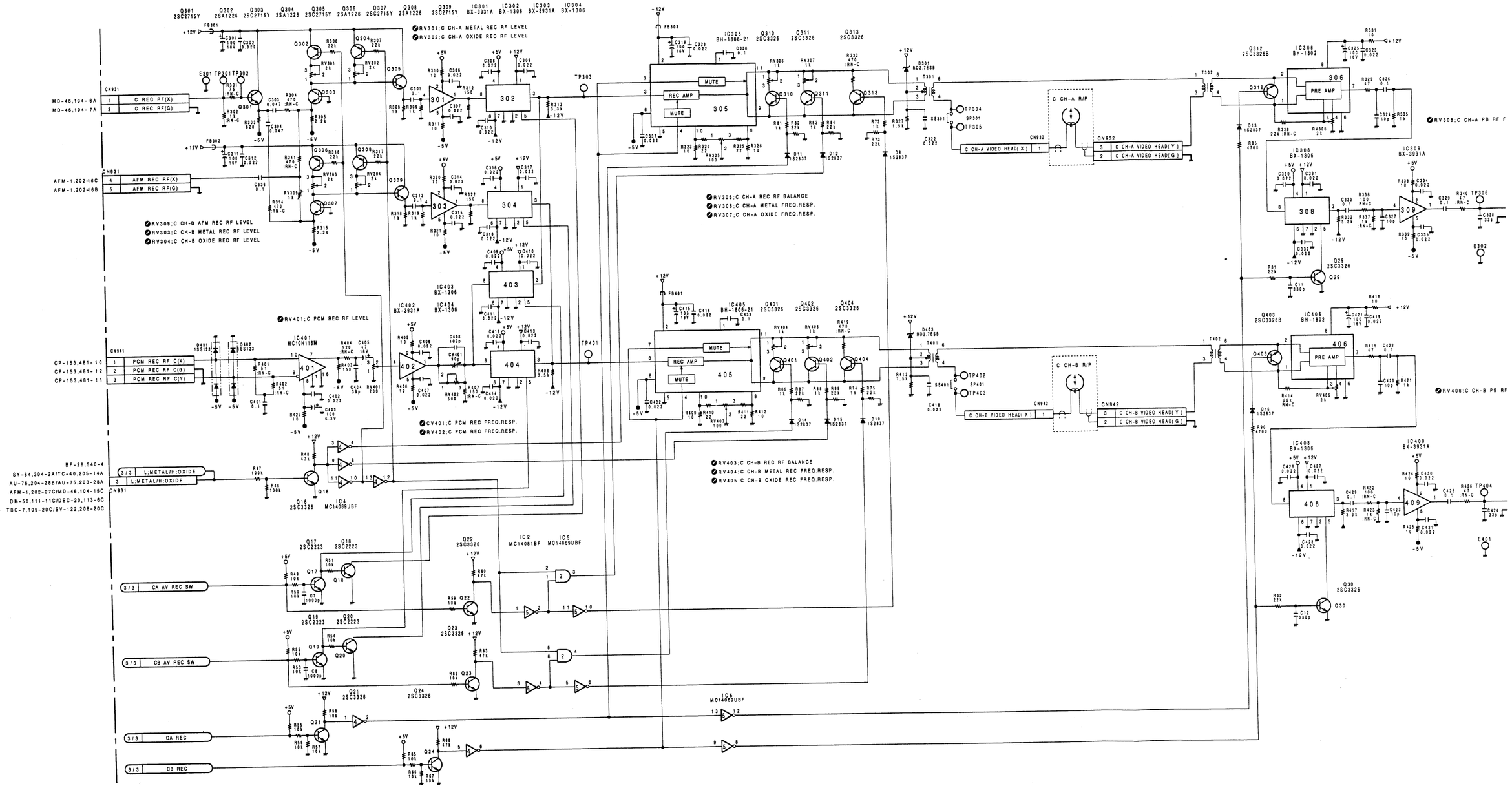

A B C D E F G H

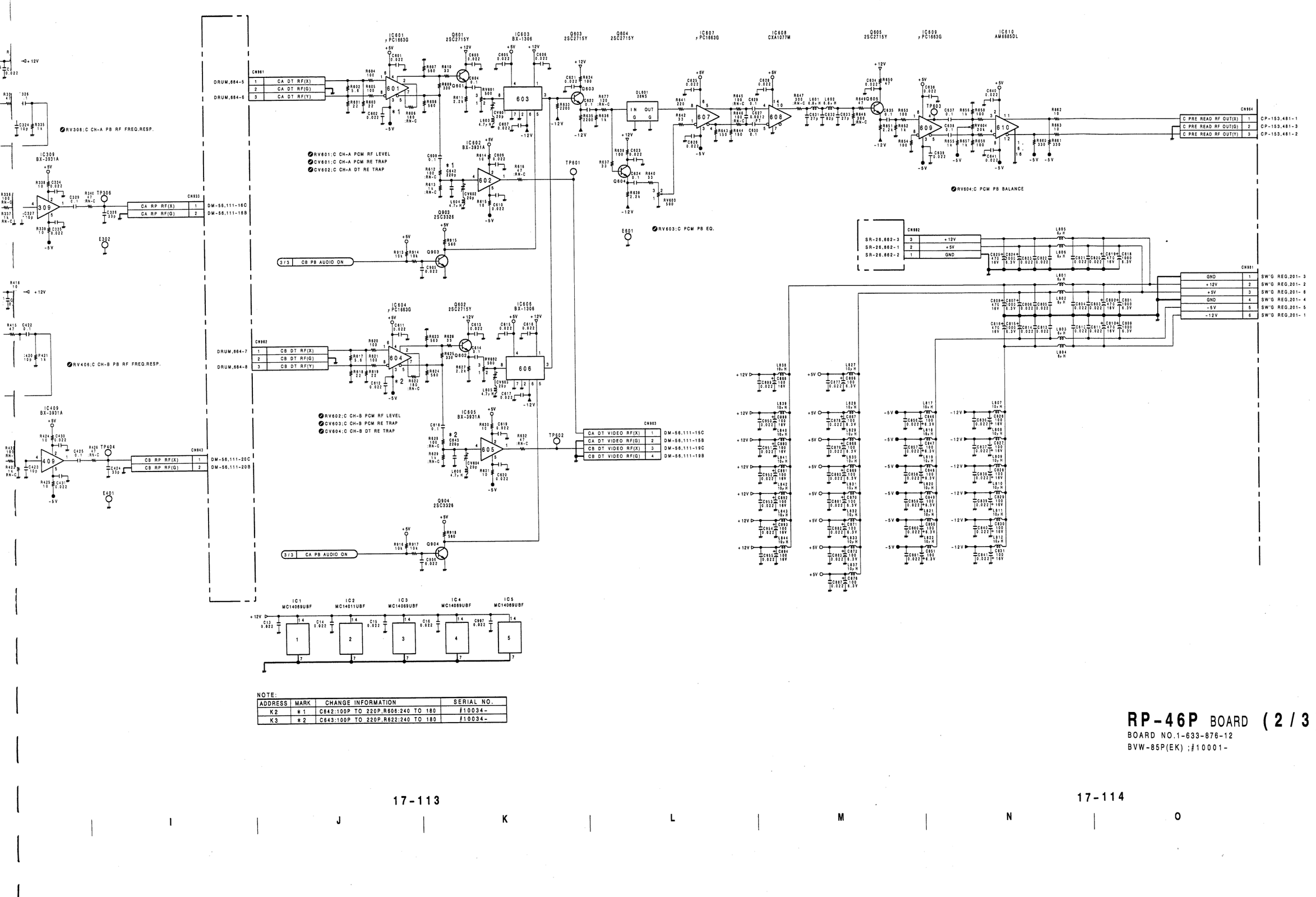

NOTE:

ADDRESS	MARK	CHANGE INFORMATION	SERIAL NO.
K2	* 1	C642:100P TO 220P,R606:240 TO 180	#10034-
K3	* 2	C643:100P TO 220P,R622:240 TO 180	#10034-

RP-46P BOARD (2/3)

BOARD NO.1-633-876-12
BVW-85P(EK) ;#10001-

RP-46P(3/3); PB AMPLIFIER
DUS-362;PCM DETECT CIRCUIT

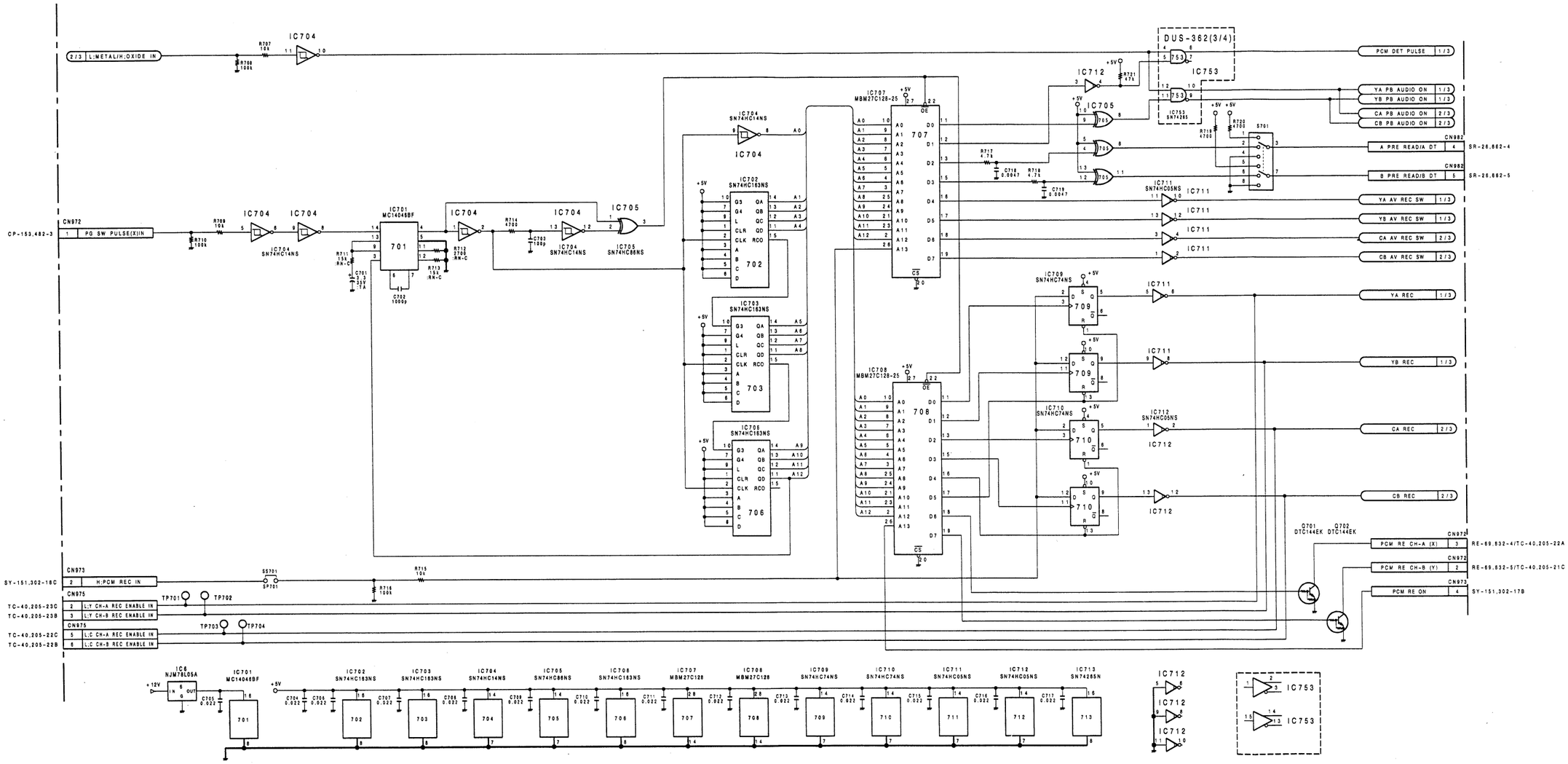

RP-46P BOARD **(3/3)**

BOARD NO.1-633-876-12

BVW-85P(EK) ;#10001-

RP-46P DUS-362

RP-46P(1-633-876-12)

BVW-85P

CNI510	J-5	*D12	E-6	IC308	D-7	*Q16	F-2	*Q904	K-1	TP404	E-7
CNI610	L-5	*D13	D-7	IC309	D-7	*Q17	E-1	*Q905	G-3	TP501	H-7
CNI707	H-2	*D14	F-6	IC401	E-4	*Q18	D-1			TP502	H-7
CNI708	H-2	*D15	F-6	IC402	F-4	*Q19	E-1	RV101	A-3	TP503	H-5
CNI713	K-1	*D16	E-7	IC403	F-5	*Q20	D-1	RV102	A-3	TP601	K-7
		D101	A-6	IC404	F-5	*Q21	E-2	RV103	B-3	TP602	K-7
CN751	M-1	D201	C-6	IC405	E-5	*Q22	F-1	RV104	B-3	TP603	K-5
CN752	M-1	*D202	C-3	IC406	F-7	*Q23	F-1	RV105	B-5	TP701	L-2
CN911	A-2	*D203	B-3	IC408	F-7	*Q24	F-2	RV106	B-5	TP702	L-2
CN912	A-6	D301	D-6	IC409	F-7	*Q29	D-7	RV107	B-6	TP703	L-1
CN913	A-7	*D401	E-3	IC501	H-7	*Q30	E-7	RV108	B-7	TP704	L-1
CN921	C-3	*D402	E-3	IC502	H-7	*Q101	B-3	RV201	C-4		
CN922	C-6	D403	E-6	IC503	H-6	*Q102	A-3	RV202	D-4		
CN923	C-7	D901	G-3	IC504	J-7	*Q103	A-3	RV203	C-5		
CN931	D-3			IC505	H-7	*Q104	A-4	RV204	C-5		
CN932	D-6	E101	B-2	IC506	H-6	*Q105	A-4	RV205	C-6		
CN933	D-7	E102	A-7	IC507	H-6	*Q106	B-3	RV206	C-7		
CN941	E-3	E201	B-7	IC508	H-5	*Q107	B-3	RV301	D-3		
CN942	E-6	E301	E-3	IC509	H-5	*Q108	B-4	RV302	D-4		
CN943	F-7	E302	D-7	IC510	J-5	*Q109	B-4	RV303	E-3		
CN951	H-7	E401	E-7	IC511	H-5	*Q110	B-5	RV304	E-4		
CN952	J-7	E501	H-6	IC512	H-5	*Q111	B-6	RV305	E-5		
CN953	H-7	E601	K-7	IC601	J-7	*Q112	A-7	RV306	D-6		
CN954	J-4			IC602	K-7	*Q113	A-6	RV307	D-6		
CN961	J-7	*FB101	A-4	IC603	K-6	*Q201	C-5	RV308	E-7		
CN962	L-7	*FB102	B-4	IC604	L-7	*Q202	C-6	RV309	D-3		
CN963	K-7	*FB103	A-5	IC605	K-7	*Q203	C-7	RV401	F-4		
CN964	K-5	*FB201	C-5	IC606	L-6	*Q204	C-6	RV402	F-4		
CN972	L-3	*FB301	D-4	IC607	K-5	*Q301	D-3	RV403	F-5		
CN973	L-2	*FB302	D-4	IC608	K-5	*Q302	D-4	RV404	F-6		
CN975	K-1	*FB303	D-6	IC609	K-5	*Q303	D-3	RV405	F-6		
CN981	L-4	*FB401	E-6	IC610	L-5	*Q304	D-4	RV406	F-7		
CN982	G-7			IC701	K-3	*Q305	D-4	RV501	G-6		
		IC1	C-2	IC702	K-2	*Q306	D-4	RV502	J-7		
CV101	B-7	IC2	F-1	IC703	J-2	*Q307	E-3	RV503	H-6		
CV201	C-5	IC3	C-2	IC704	K-3	*Q308	E-4	RV504	H-5		
CV202	C-7	IC4	E-2	IC705	J-3	*Q309	E-4	RV505	J-5		
CV401	F-5	IC5	E-2	IC706	J-2	*Q310	D-5	RV601	K-6		
CV501	G-6	IC6	J-3	IC707	H-2	*Q311	D-6	RV602	L-6		
CV502	H-6	IC101	A-4	IC708	H-2	*Q312	D-7	RV603	J-5		
CV503	J-6	IC102	A-5	IC709	G-1	*Q313	D-6	RV604	K-6		
CV504	H-6	IC103	B-4	IC710	H-1	*Q401	F-5				
CV601	K-6	IC104	B-5	IC711	J-1	*Q402	F-6	TP101	A-3		
CV602	K-7	IC105	A-5	IC712	K-1	*Q403	E-7	TP102	B-2		
CV603	K-6	IC106	B-6	IC751	M-1	*Q404	F-6	TP103	B-5		
CV604	K-7	IC108	B-7	IC752	M-1	*Q501	H-7	TP104	B-6		
		IC109	B-7	IC753	M-1	*Q502	J-7	TP105	B-6		
DL501	J-6	IC201	B-4	IC902	G-2	*Q503	H-6	TP106	A-7		
DL601	J-6	IC202	C-4	IC903	G-2	*Q504	J-6	TP201	C-5		
		IC203	C-5			*Q505	G-5	TP202	C-6		
*D1	B-6	IC204	C-5	*Q1	C-2	*Q506	G-5	TP203	C-6		
*D2	C-6	IC205	C-5	*Q2	B-1	*Q601	J-7	TP204	C-7		
*D3	B-6	IC206	C-6	*Q3	B-1	*Q602	L-6	TP301	D-3		
*D4	B-6	IC208	C-7	*Q4	B-1	*Q603	K-6	TP302	E-3		
*D5	A-7	IC209	C-7	*Q5	B-1	*Q604	J-6	TP303	E-5		
*D6	C-6	IC301	D-4	*Q6	C-2	*Q605	K-5	TP304	D-6		
*D7	C-6	IC302	D-5	*Q7	F-1	*Q701	K-3	TP305	D-6		
*D8	C-7	IC303	D-4	*Q8	F-1	*Q702	K-3	TP306	D-7		
*D9	E-6	IC304	D-5	*Q9	C-2	*Q901	K-1	TP401	F-5		
*D10	F-6	IC305	D-5	*Q14	A-7	*Q902	K-1	TP402	F-6		
*D11	E-6	IC306	E-7	*Q15	B-7	*Q903	K-1	TP403	F-6		

* : SOLDERING SIDE

RP-46P; REC/PB AMPLIFIER
DUS-362; PCM DETECT CIRCUIT

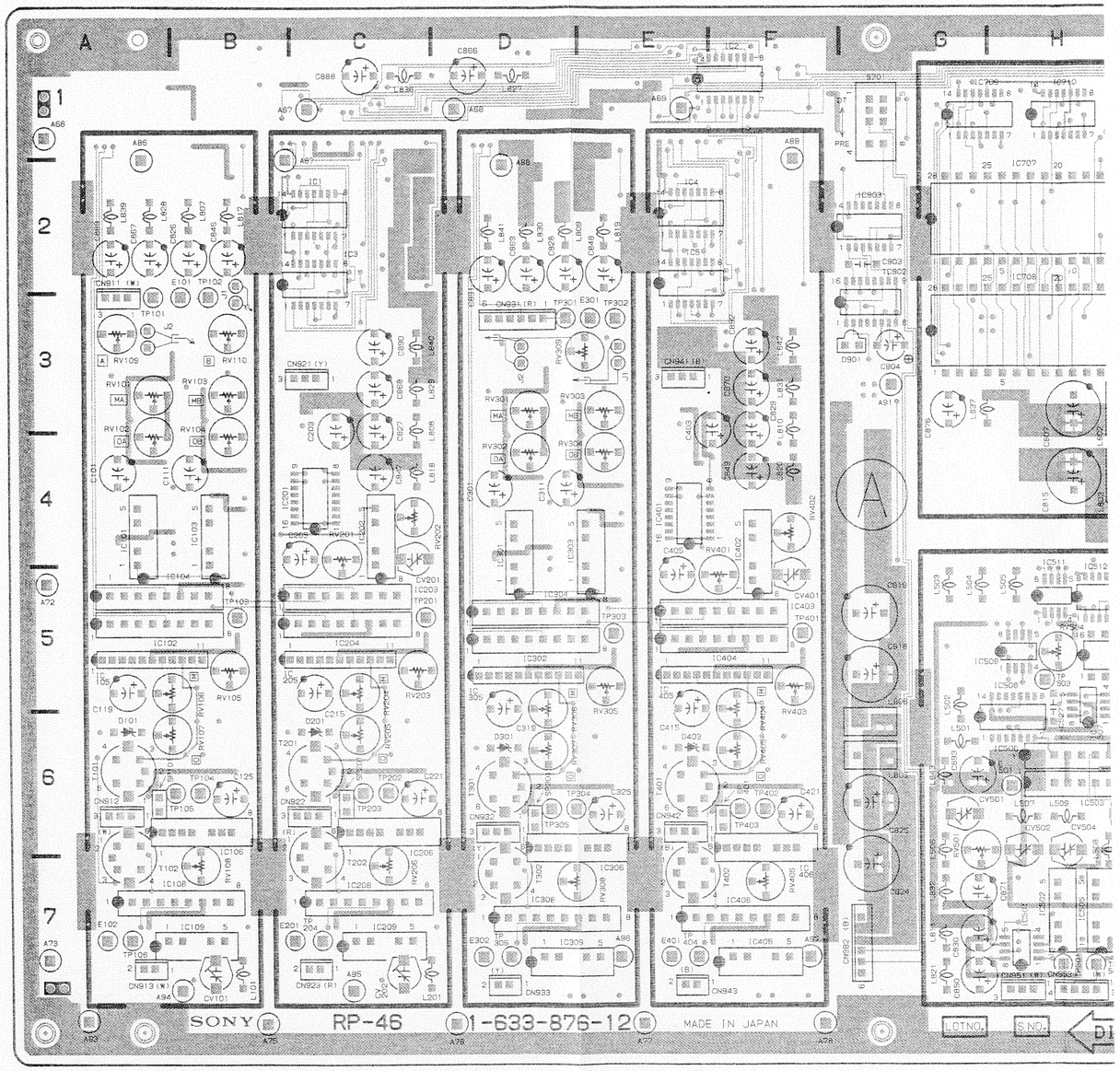

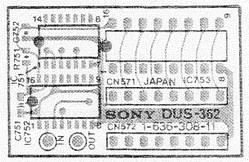

DUS-362 1-636-308-11 A SIDE

A Side is the same as Component Side.

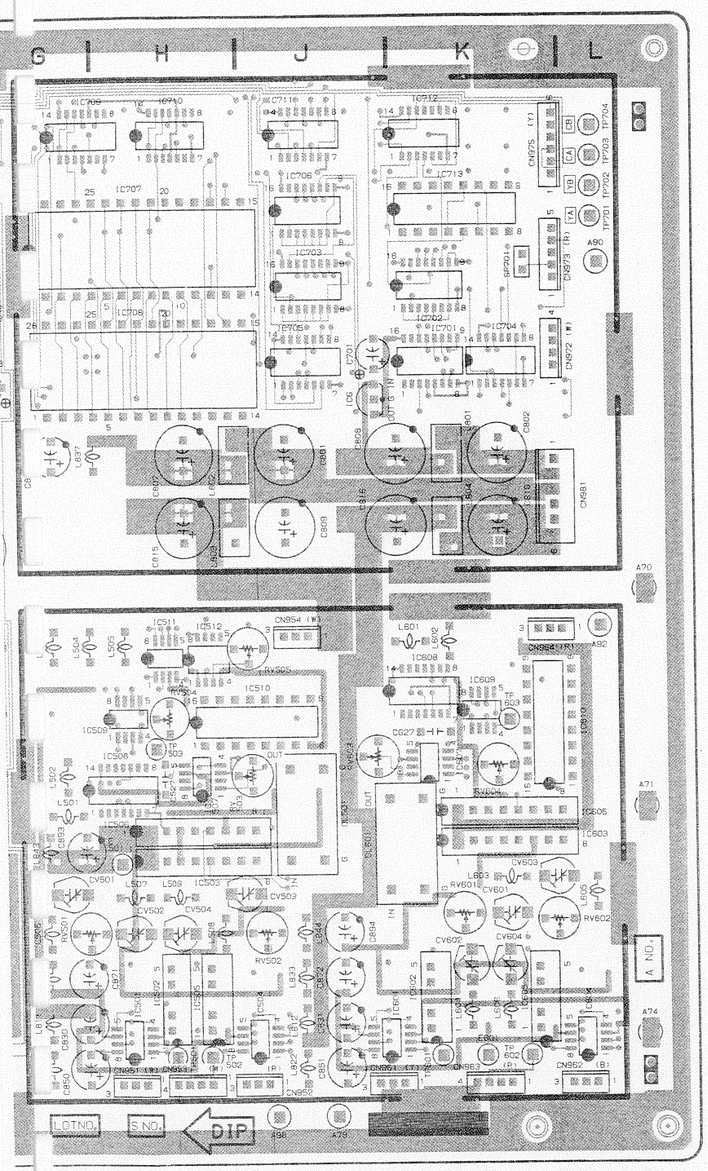

RP-46P 1-633-876-12 A SIDE

A Side is the same as Component Side.

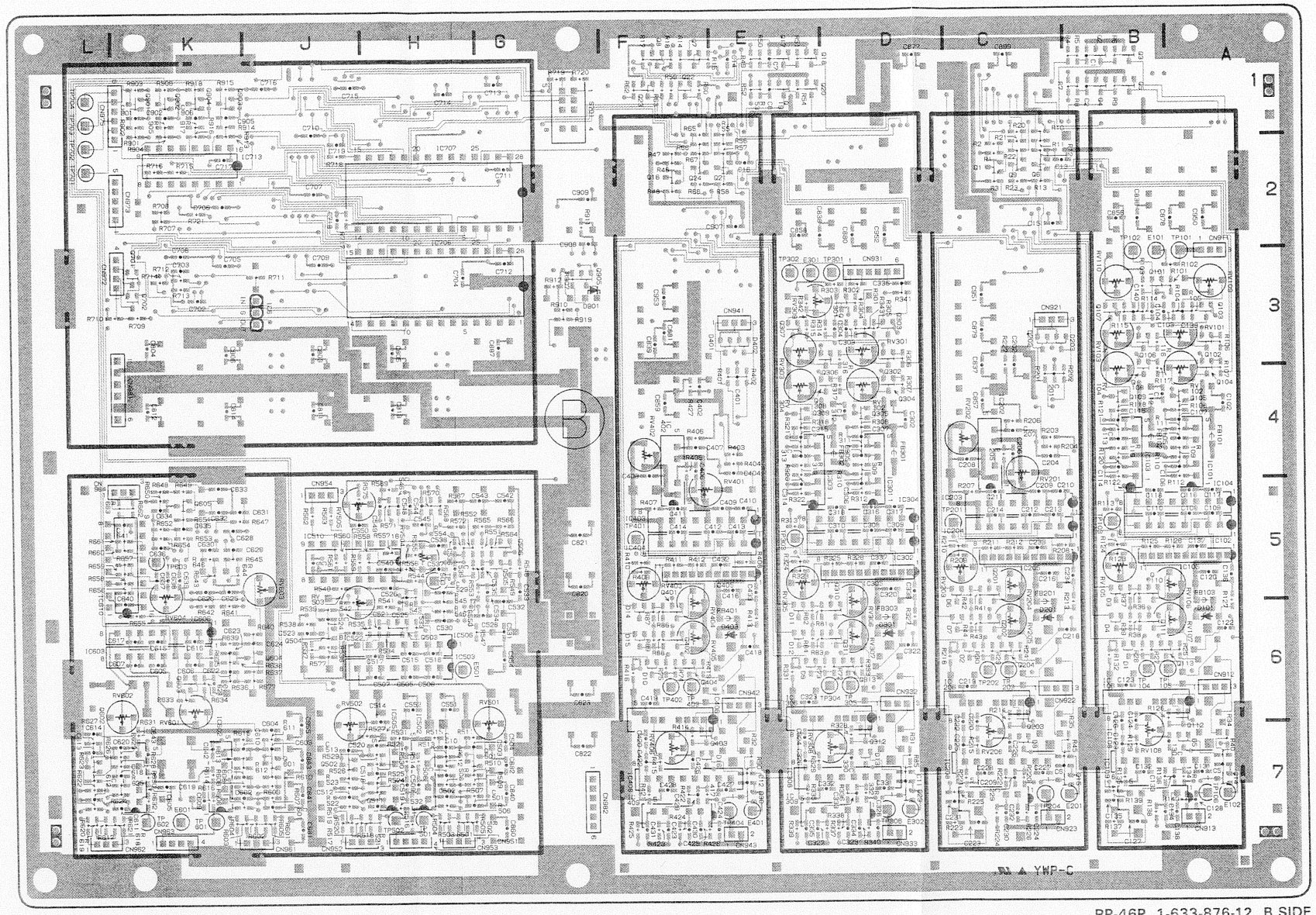

RP-46P 1-633-876-12 B SIDE

B Side is the same as Solder Side.

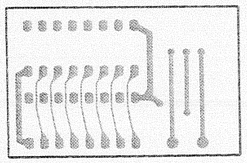

DUS-362 1-636-308-11 B SIDE

B Side is the same as Solder Side.

PA-110; REC/PB PRE-AMPLIFIER

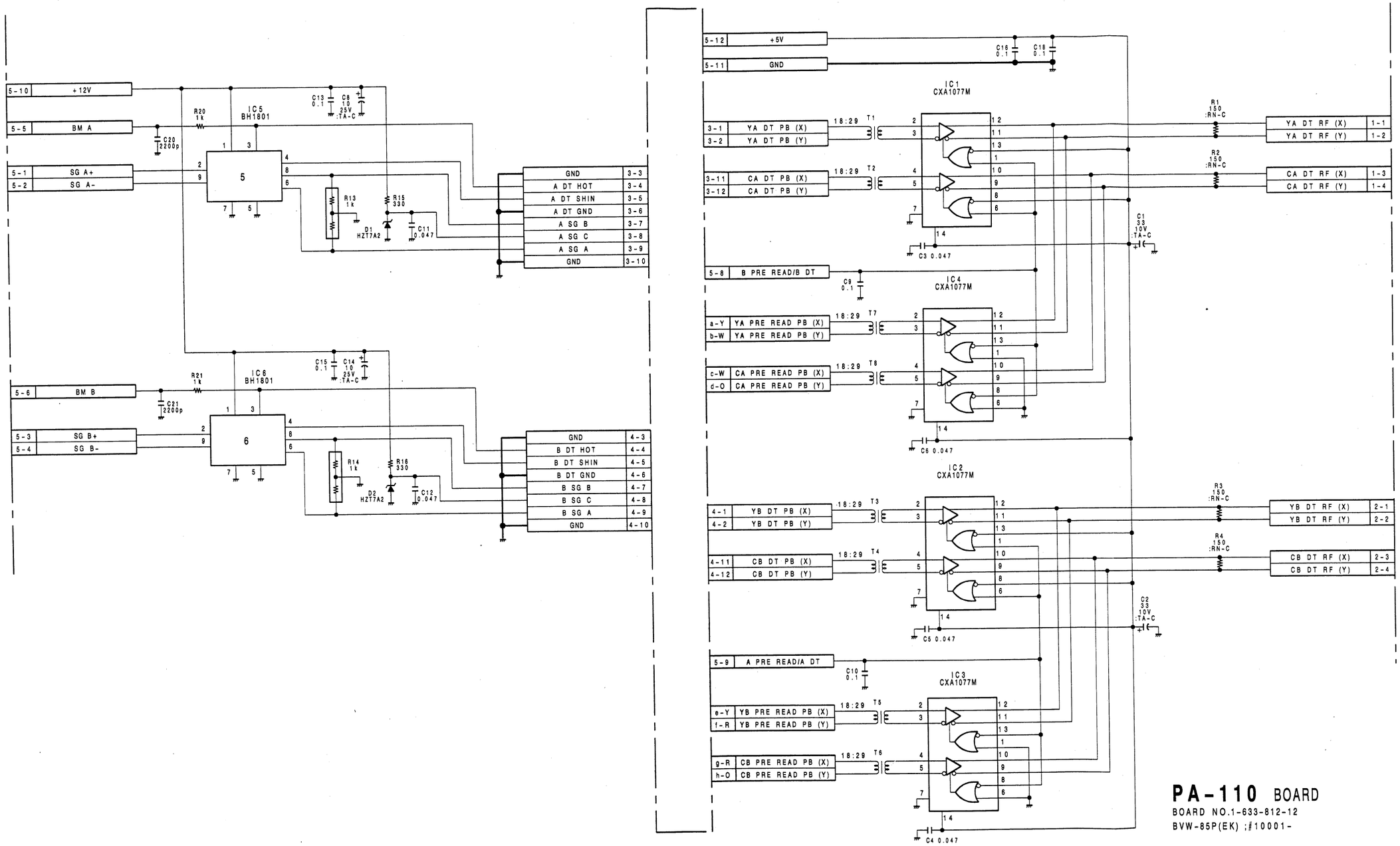

PA-110 BOARD
BOARD NO.1-633-812-12
BVW-85P(EK) ;#10001-

DM-56PC(1/2);Y DEMODURATOR
EQ-26; RF EQUALIZER
DUS-288; DO RF EQUALIZER
DUS-345; Y NOISE SLICER IN DT MODE

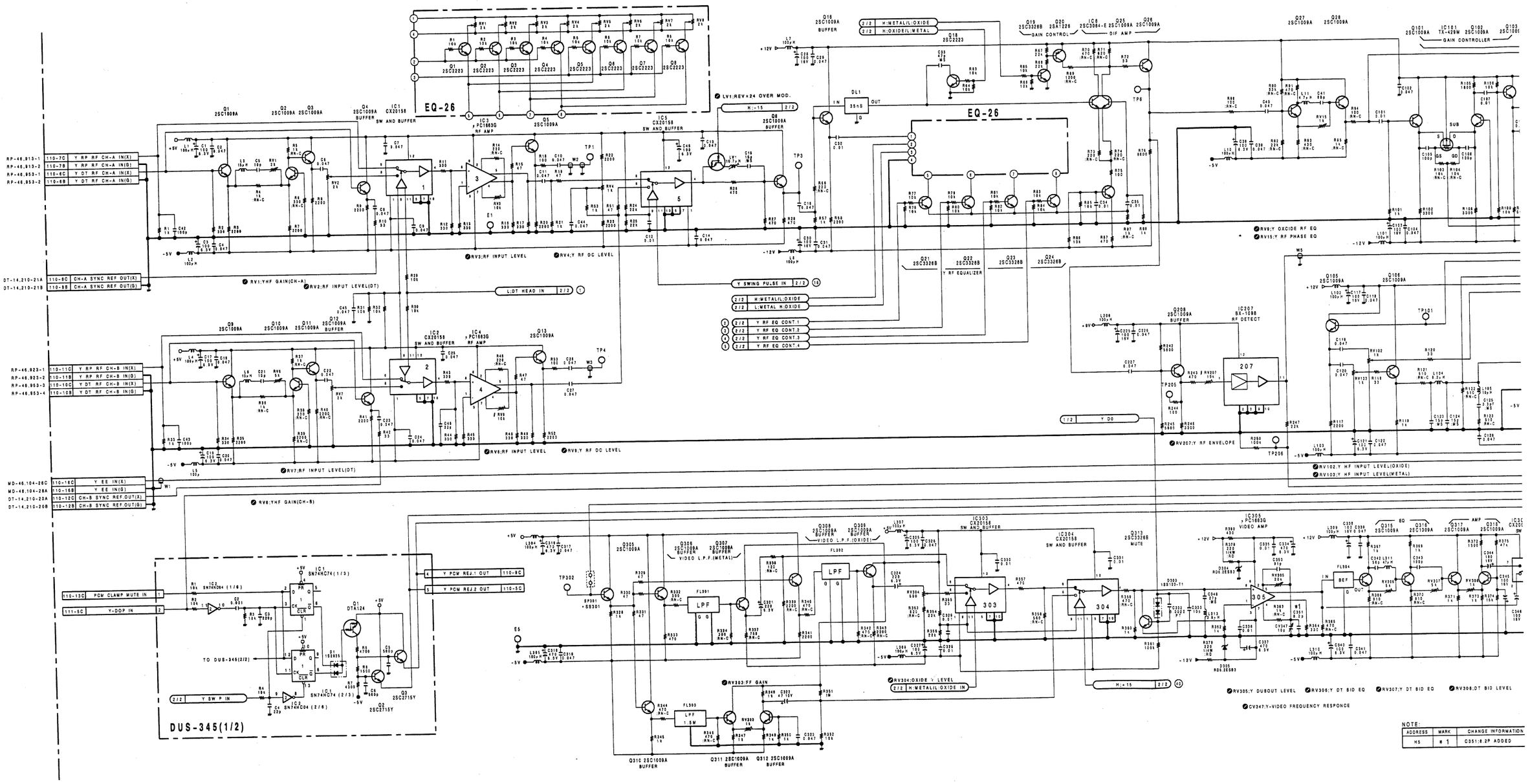

NOTE:

ADDRESS	MARK	CHANGE INFORMATION	SERIAL NO.
H5	※1	C351:8.2P ADDED	#10034-

DM-56PC BOARD (1/2)

BOARD NO.1-622-545-34

BVW-85P(EK) ;#10001-

MD-56PC(2/2); C DEMODULATOR
DUS-259; METAL/OXIDE LPF SWITCH
DUS-269; C RF PHASE EQUALIZER
EQ-28; RF EQUALIZER
DUS-345; C NOISE SLICER IN DT MODE

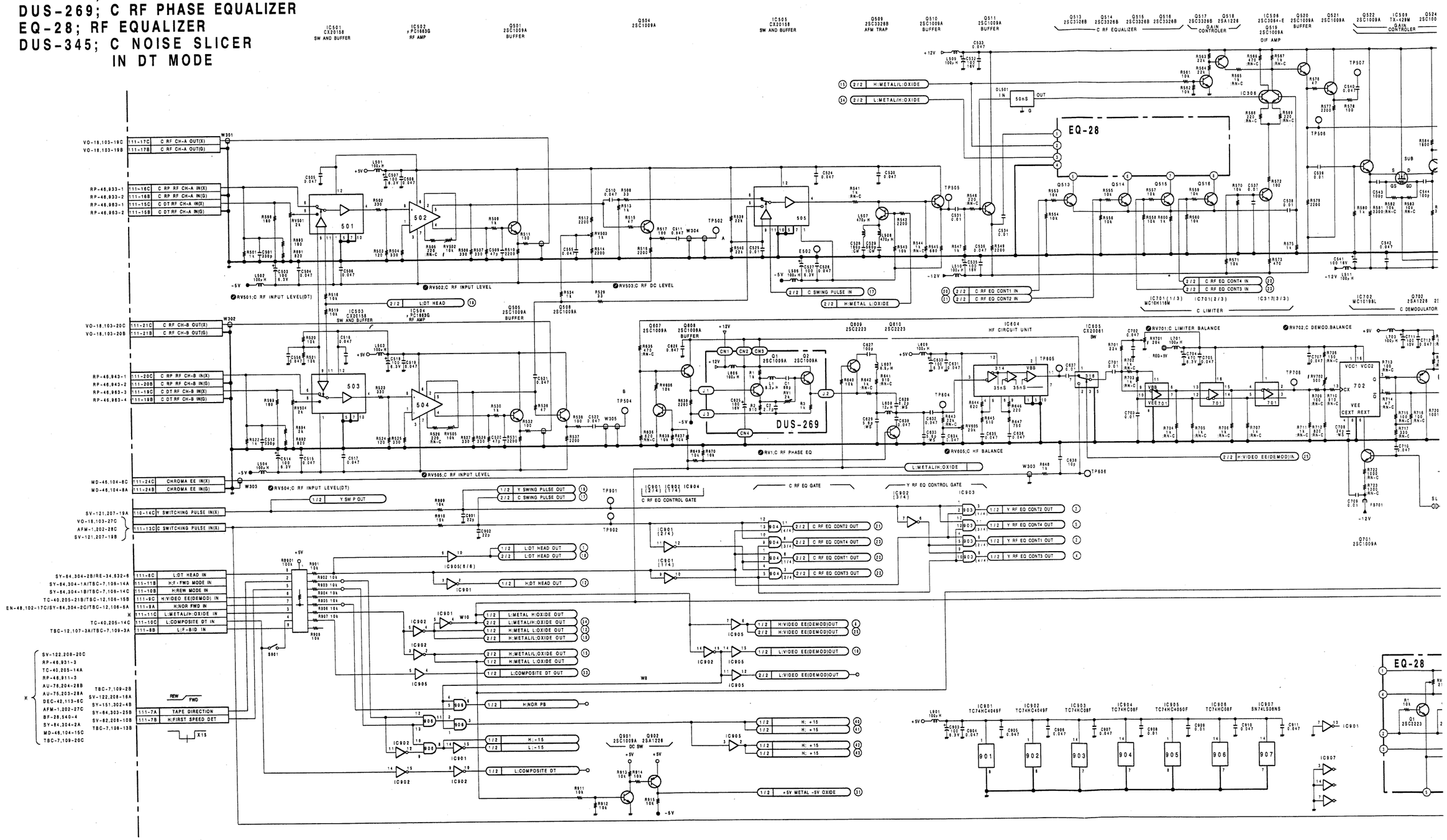

DM-56PC(2/2)

DM-56PC BOARD (2/2)

BOARD NO.1-622-545-34

BVW-85P(EK) ;#10001-

DM-56PC(1-622-545-34)

BVW-85P

CN110	C-7	IC202	A-4	*Q20	B-4	*Q415	E-7	RV107	D-1	TP402	E-6
CN111	E-7	IC203	A-5	*Q21	B-5	*Q416	E-7	RV201	A-3	TP403	D-6
		IC204	A-5	*Q22	B-5	*Q417	F-6	RV202	A-3	TP404	E-6
CV347	D-5	IC205	A-5	*Q23	B-5	*Q501	G-6	RV203	A-4	TP405	F-5
		IC207	C-3	*Q24	B-5	*Q504	G-5	RV204	B-5	TP406	E-7
DL1	B-4	IC301	E-1	*Q25	B-4	*Q505	H-6	RV205	A-4	TP408	D-7
DL501	G-3	IC302	E-2	*Q26	B-3	*Q508	H-5	RV206	A-6	TP502	F-1
		IC303	D-4	*Q27	C-3	*Q509	H-4	RV207	C-3	TP504	F-1
D101	D-2	IC304	E-4	*Q28	C-3	*Q510	H-4	RV301	D-1	TP505	H-4
*D102	A-2	IC305	D-5	*Q101	B-3	*Q511	H-3	RV302	E-1	TP506	G-2
*D201	A-5	IC306	E-5	*Q102	B-3	*Q513	H-4	RV303	E-4	TP507	F-1
*D202	A-5	IC401	F-6	*Q103	B-3	*Q514	H-4	RV304	D-4	TP508	F-1
D301	E-2	IC402	E-7	*Q104	A-2	*Q515	G-4	RV305	D-5	TP601	F-2
*D302	E-2	IC403	D-7	*Q105	A-2	*Q516	G-3	RV306	E-5	TP602	F-3
*D303	D-5	IC501	H-6	*Q106	A-2	*Q517	G-3	RV307	F-5	TP603	F-4
D304	C-4	IC503	H-6	*Q107	B-2	*Q518	G-3	RV308	F-5	TP604	H-1
D305	D-5	IC504	H-6	*Q108	C-2	*Q519	G-3	RV401	E-6	TP605	J-1
*D401	D-7	IC505	H-4	*Q109	C-2	*Q520	G-2	RV405	F-6	TP606	H-1
*D500	G-1	IC506	G-2	*Q110	D-2	*Q521	G-2	RV501	G-6	TP708	H-2
*D601	F-4	IC507	G-1	*Q111	C-2	*Q524	G-2	RV502	G-5	TP709	J-1
D701	H-2	IC508	G-1	*Q112	B-1	*Q525	G-1	RV503	H-5	TP801	J-6
*D702	H-2	IC509	G-2	*Q113	C-2	*Q526	F-1	RV504	H-6	TP802	H-5
D703	J-4	IC601	F-2	*Q114	B-1	*Q601	F-1	RV505	H-5	TP803	H-7
D704	J-3	IC602	F-3	*Q115	C-1	*Q602	F-2	RV512	F-1	TP804	J-6
*D801	J-6	IC603	F-4	*Q116	C-1	*Q603	F-2	RV601	F-2	TP805	G-4
*D802	H-6	IC604	H-1	*Q117	D-1	*Q604	G-4	RV602	F-2	TP901	C-1
*D901	A-1	IC605	H-1	*Q118	D-1	*Q605	F-4	RV603	F-2		
*D902	A-1	IC701	H-2	*Q119	D-1	*Q606	F-4	RV604	G-3		
		IC702	J-2	*Q201	A-2	*Q607	G-1	RV605	G-1		
E1	B-6	IC703	J-3	*Q202	A-2	*Q608	G-1	RV606	G-1		
E5	D-4	IC704	H-4	*Q203	A-3	*Q609	G-1	RV701	G-1		
E101	E-1	IC801	J-5	*Q204	B-5	*Q610	G-1	RV702	J-1		
E201	B-4	IC802	J-6	*Q205	B-5	*Q701	H-2	RV703	J-3		
E401	D-7	IC901	G-5	*Q206	A-5	*Q702	J-2	RV704	J-3		
E502	H-4	IC902	G-6	*Q207	A-5	*Q703	J-2	RV802	J-6		
		IC903	F-7	*Q208	B-3	*Q704	J-2				
FB301	D-2	IC904	G-4	*Q301	E-2	*Q705	J-3	S402	D-6		
FB701	H-2	IC905	G-5	*Q302	D-2	*Q706	J-4	S403	E-6		
FB901	B-7	IC906	F-7	*Q303	D-2	*Q707	J-3	S802	H-5		
FB902	A-6	IC907	F-4	*Q305	D-3	*Q708	H-3	S901	E-7		
FB903	B-7	IC908	A-1	*Q306	D-2	*Q709	H-3				
FB904	J-7	IC909	A-1	*Q307	D-3	*Q801	J-4	TH301	D-5		
				*Q308	E-3	*Q803	J-5	TH402	F-6		
FL301	D-2	LV1	C-5	*Q309	E-3	*Q813	J-5	TH701	J-4		
FL302	E-2			*Q310	E-3	*Q814	J-6				
FL303	E-3	*Q1	B-6	*Q311	E-4	*Q901	C-3	TP1	B-1		
FL304	E-5	*Q2	B-6	*Q312	E-4	*Q902	C-2	TP3	C-4		
FL701	H-2	*Q3	B-6	*Q313	D-4			TP4	B-1		
		*Q4	B-6	*Q314	E-5	RV1	B-7	TP6	C-4		
IC1	B-6	*Q5	B-6	*Q315	E-5	RV2	B-6	TP101	A-2		
IC2	C-6	*Q6	C-5	*Q316	E-5	RV3	B-5	TP104	C-1		
IC3	B-6	*Q7	B-4	*Q317	F-5	RV4	C-5	TP105	D-1		
IC4	C-6	*Q9	C-7	*Q318	F-5	RV6	C-7	TP106	E-1		
IC5	C-5	*Q10	C-7	*Q403	D-5	RV7	C-6	TP201	A-3		
IC6	B-4	*Q11	C-7	*Q404	D-6	RV8	C-5	TP202	A-4		
IC101	B-3	*Q12	C-6	*Q409	E-7	RV15	C-3	TP203	A-5		
IC102	A-3	*Q13	C-6	*Q410	E-7	RV102	B-1	TP205	B-1		
IC103	A-2	Q15	C-5	*Q411	E-6	RV103	B-2	TP206	C-4		
IC104	D-1	*Q16	C-4	*Q412	E-6	RV104	C-1	TP301	E-1		
IC105	E-1	*Q18	B-4	*Q413	F-6	RV105	D-1	TP302	D-2		
IC201	A-3	*Q19	B-4	*Q414	F-6	RV106	C-1	TP401	E-6		

* : SOLDERING SIDE

DM-56PC; Y/C DEMODULATOR
DUS-259; METAL/OXIDE LPF SWITCH
DUS-269; C RF PHASE EQUALIZER

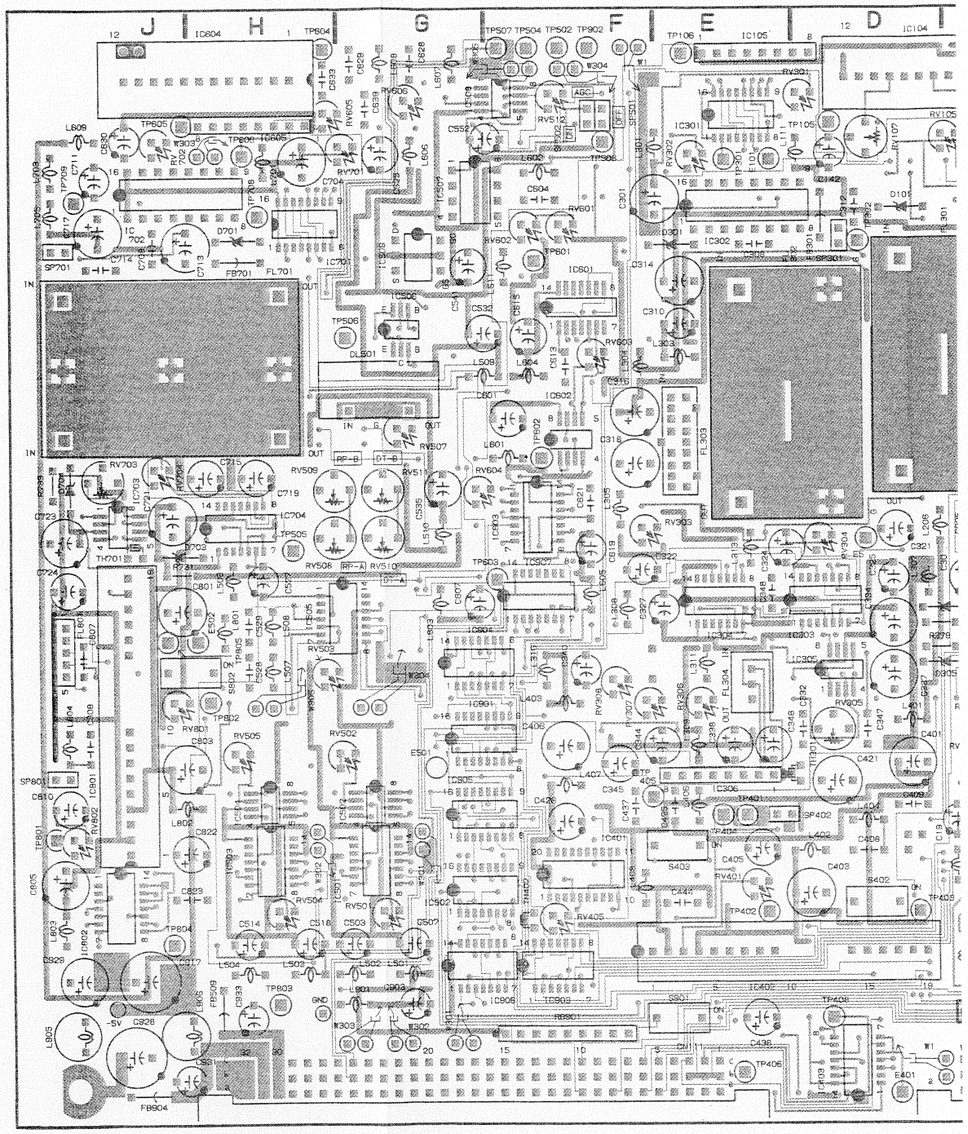

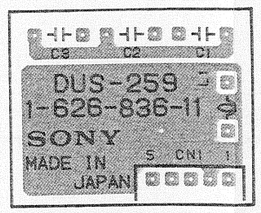

DUS-259 1-626-836-11 COMPONENT SIDE

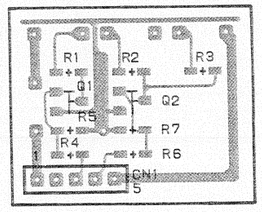

DUS-259 1-626-836-11 SOLDER SIDE

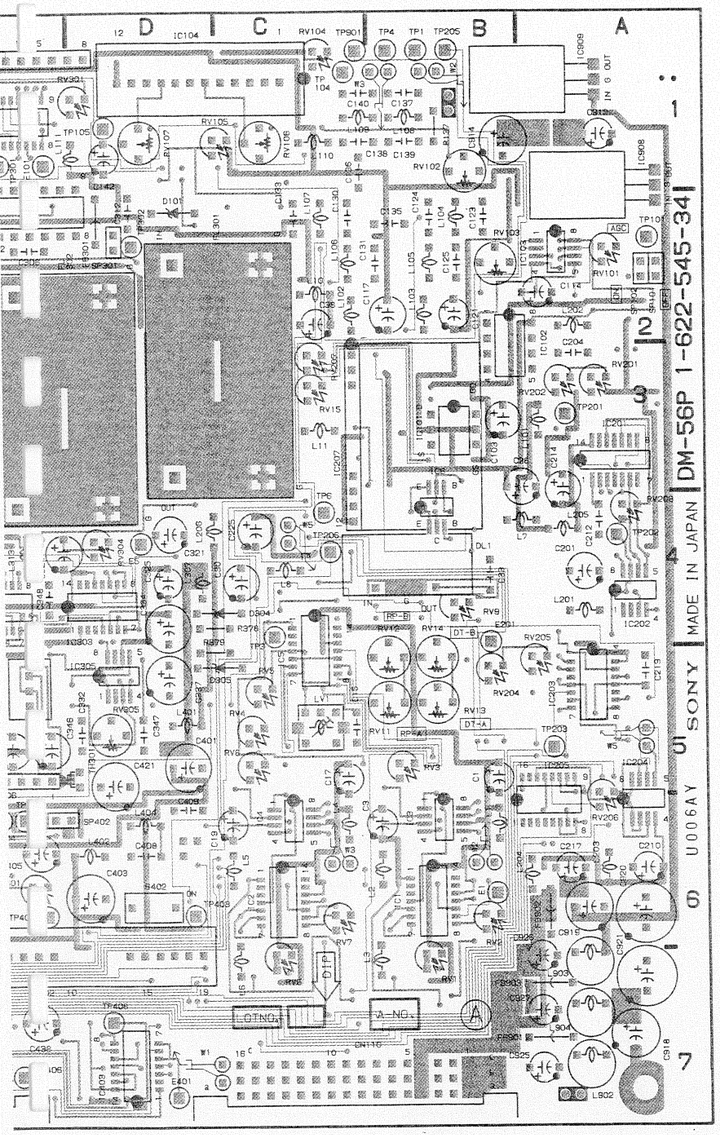

DM-56PC 1-622-545-34 A SIDE

A Side is the same as Component Side.

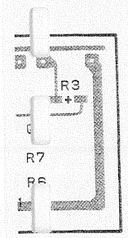

OLDER SIDE

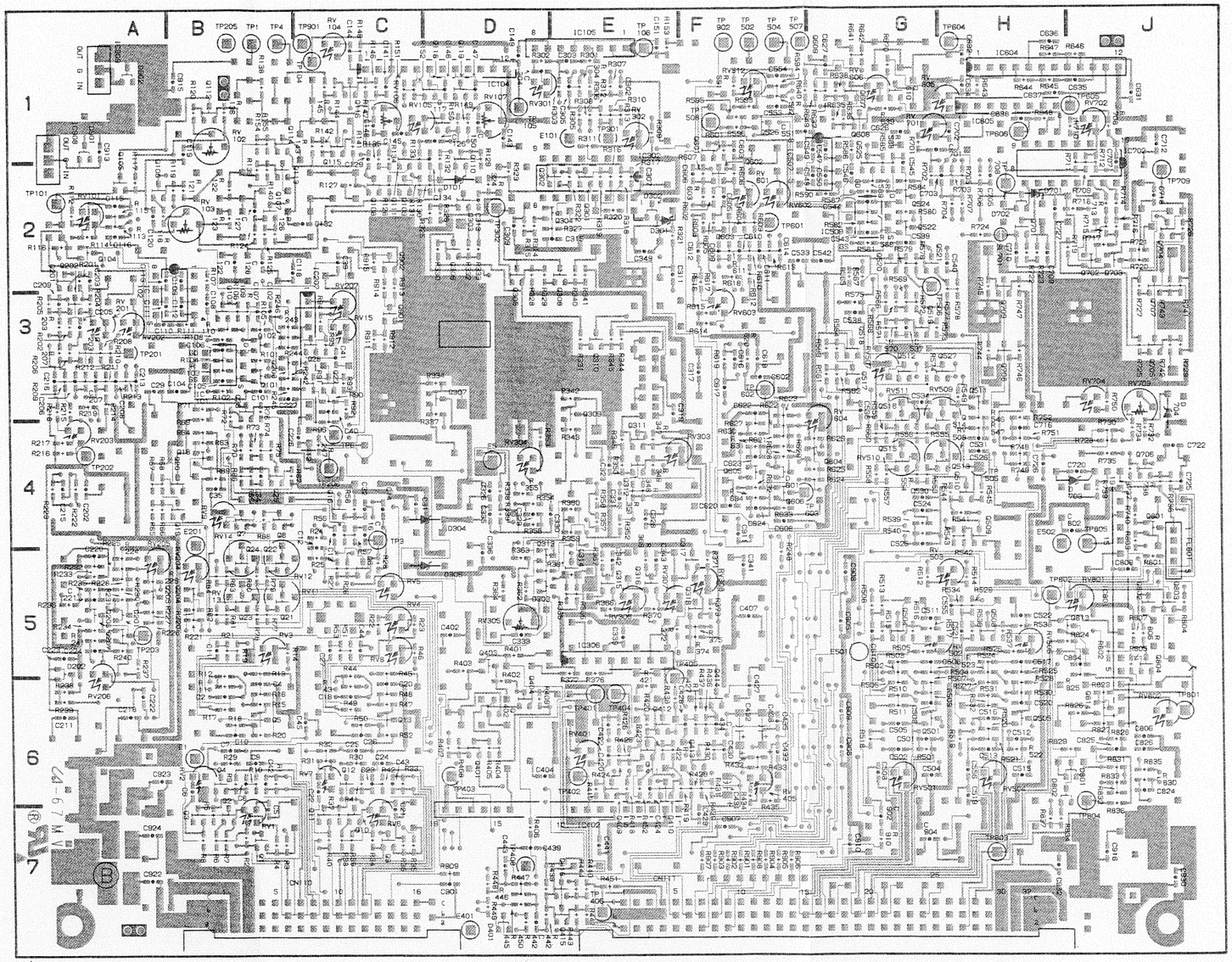

DM-56PC 1-622-545-34 B SIDE

B Side is the same as Solder Side.

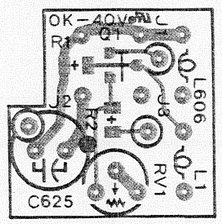

DUS-269 1-627-282-11 COMPONENT SIDE

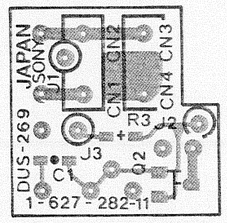

DUS-269 1-627-282-11 SOLDER SIDE

DUS-288; DO RF EQUALIZER
DUS-345; Y/C NOISE SLICER IN DT MODE
EQ-26; RF EQUALIZER
EQ-28; RF EQUALIZER

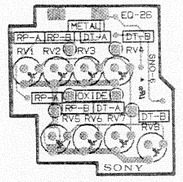

EQ-26 1-628-676-11 COMPONENT SIDE

EQ-26 1-628-676-11 SOLDER SIDE

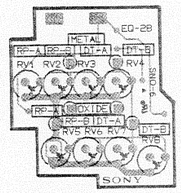

EQ-28 1-628-975-11 COMPONENT SIDE

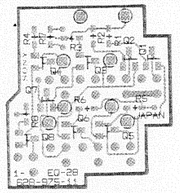

EQ-28 1-628-975-11 SOLDER SIDE

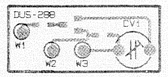

DUS-288 1-628-943-11 COMPONENT SIDE

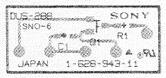

DUS-288 1-628-943-11 SOLDER SIDE

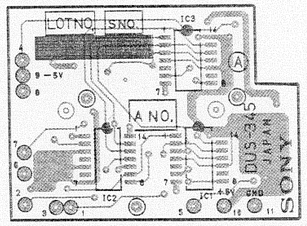

DUS-345 1-635-407-11 A SIDE

A Side is the same as Component Side.

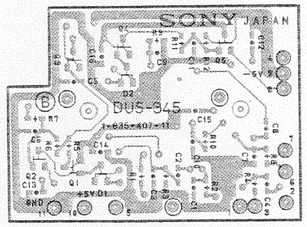

DUS-345 1-635-407-11 B SIDE

B Side is the same as Solder Side.

TBC-7D(1/3); A/D CONVERTER

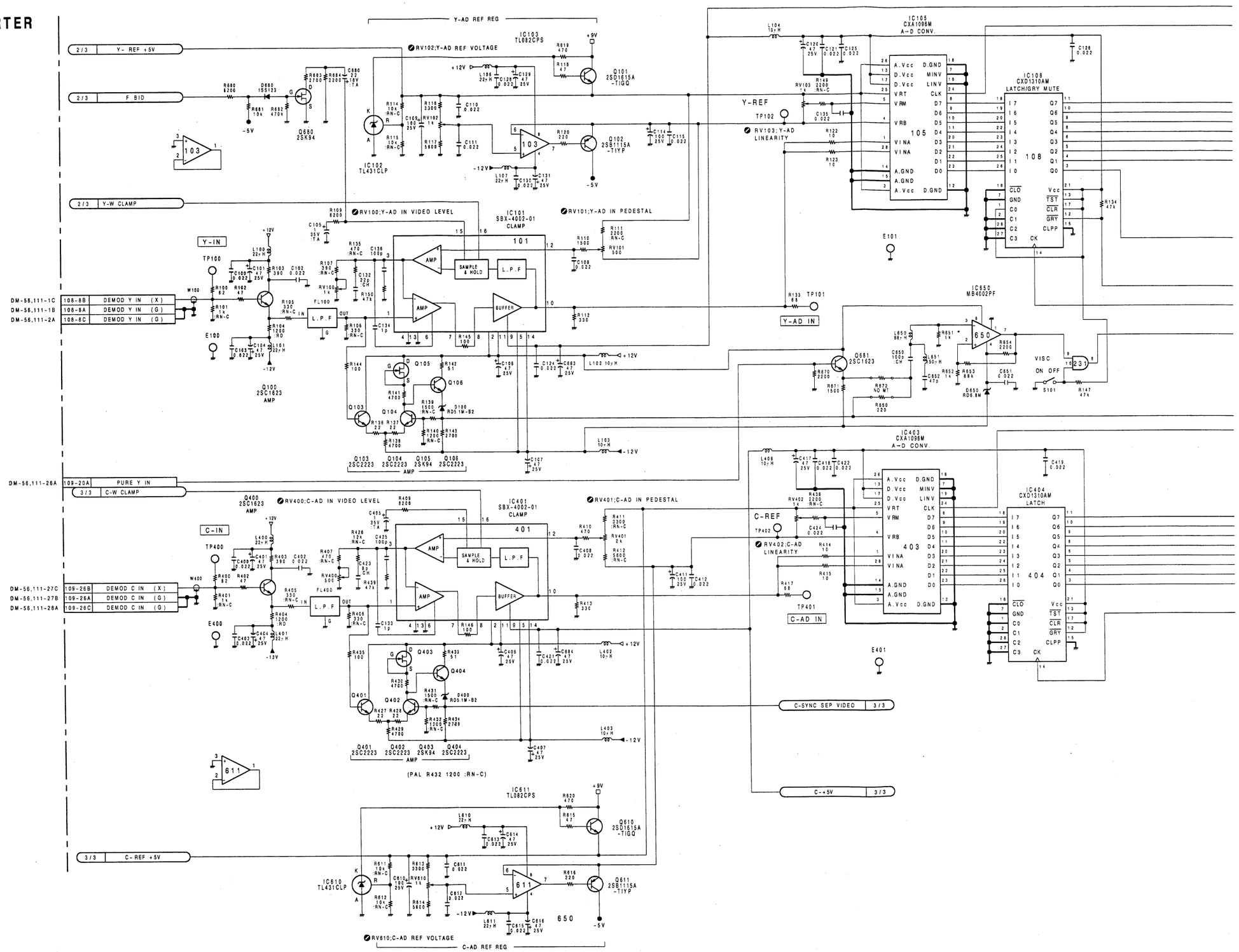

17-171 17-172

A B C D E F G H

TBC-7D(1/3)

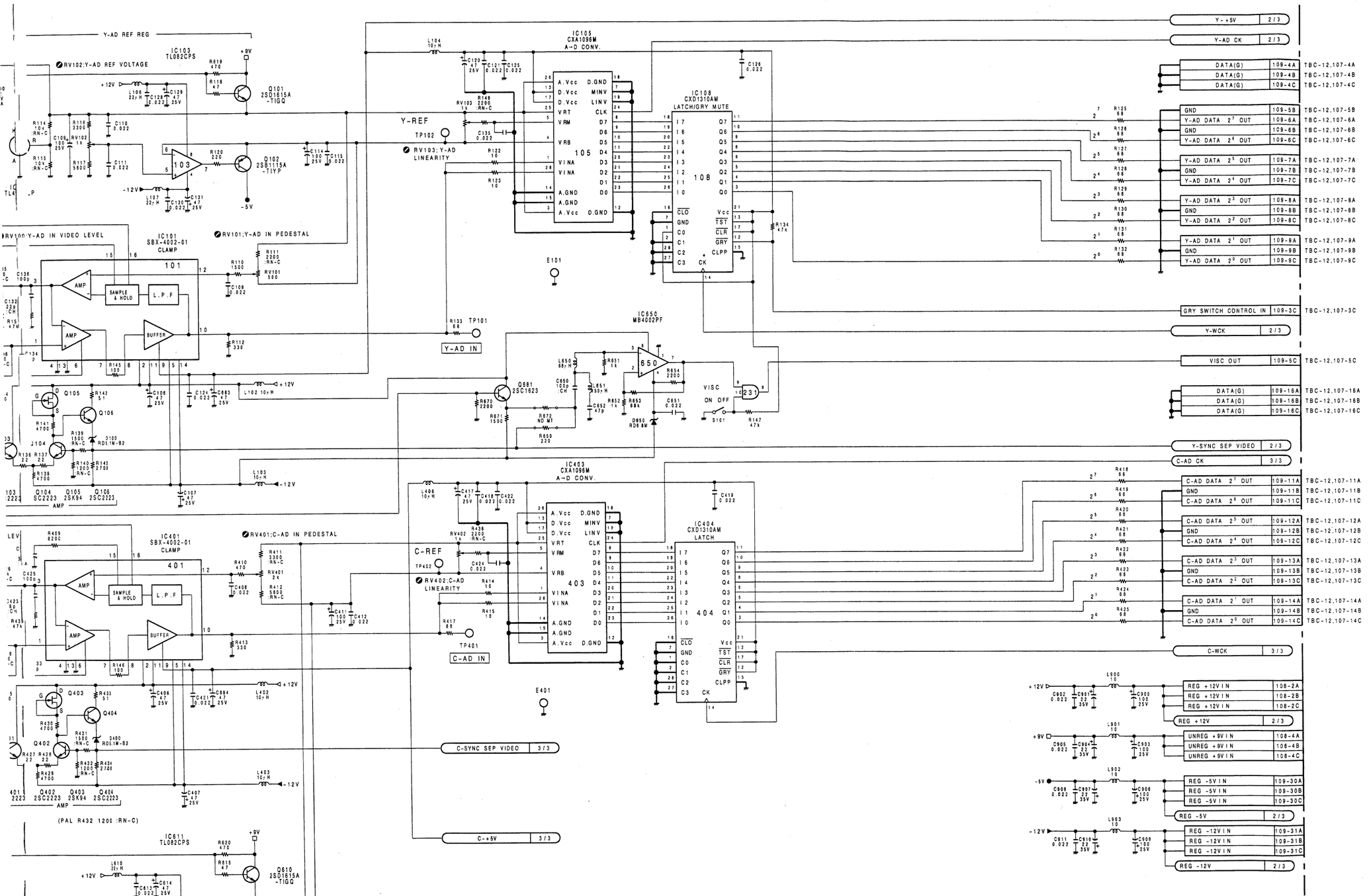

TBC-7D BOARD (1/3)

BOARD NO.1-622-548-15

BVW-85P(EK) ;#10001-

TBC-7D(2/3); Y WRITE CLOCK GENERATOR

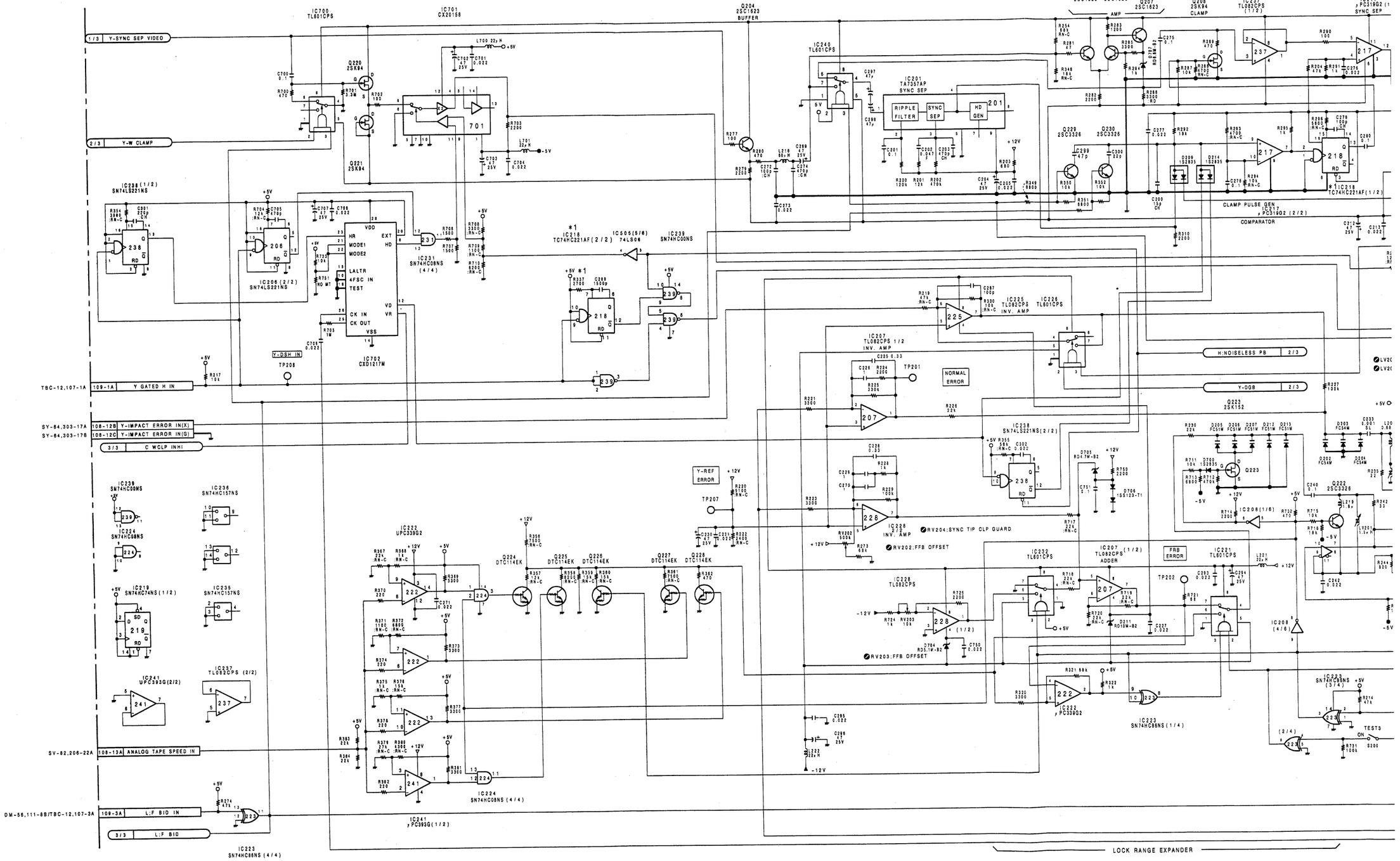

TBC-7D(2/3)

NOTE:

ADDRESS	MARK	CHANGE INFORMATION	SERIAL NO.
D2,12	* 1	IC TYPE CHANGE IC218; TC74HC221F TO TC74HC221AF R337:3300 TO 2700	#10109-

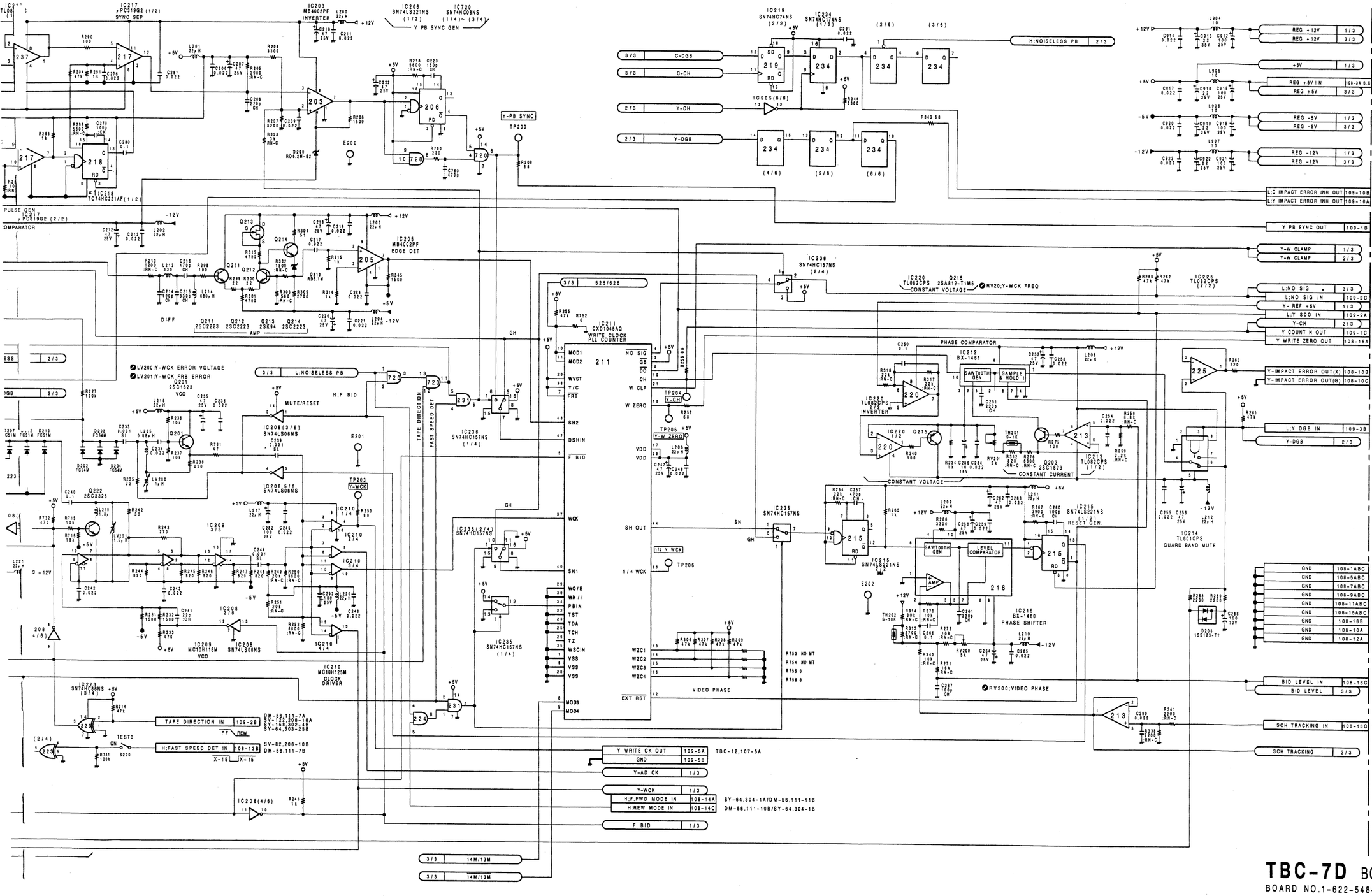

TBC-7D BOARD (2/3)

BOARD NO.1-622-548-15

BVW-85P(EK);#10001-

TBC-7D(3/3); C WHITE CLOCK GENERATOR

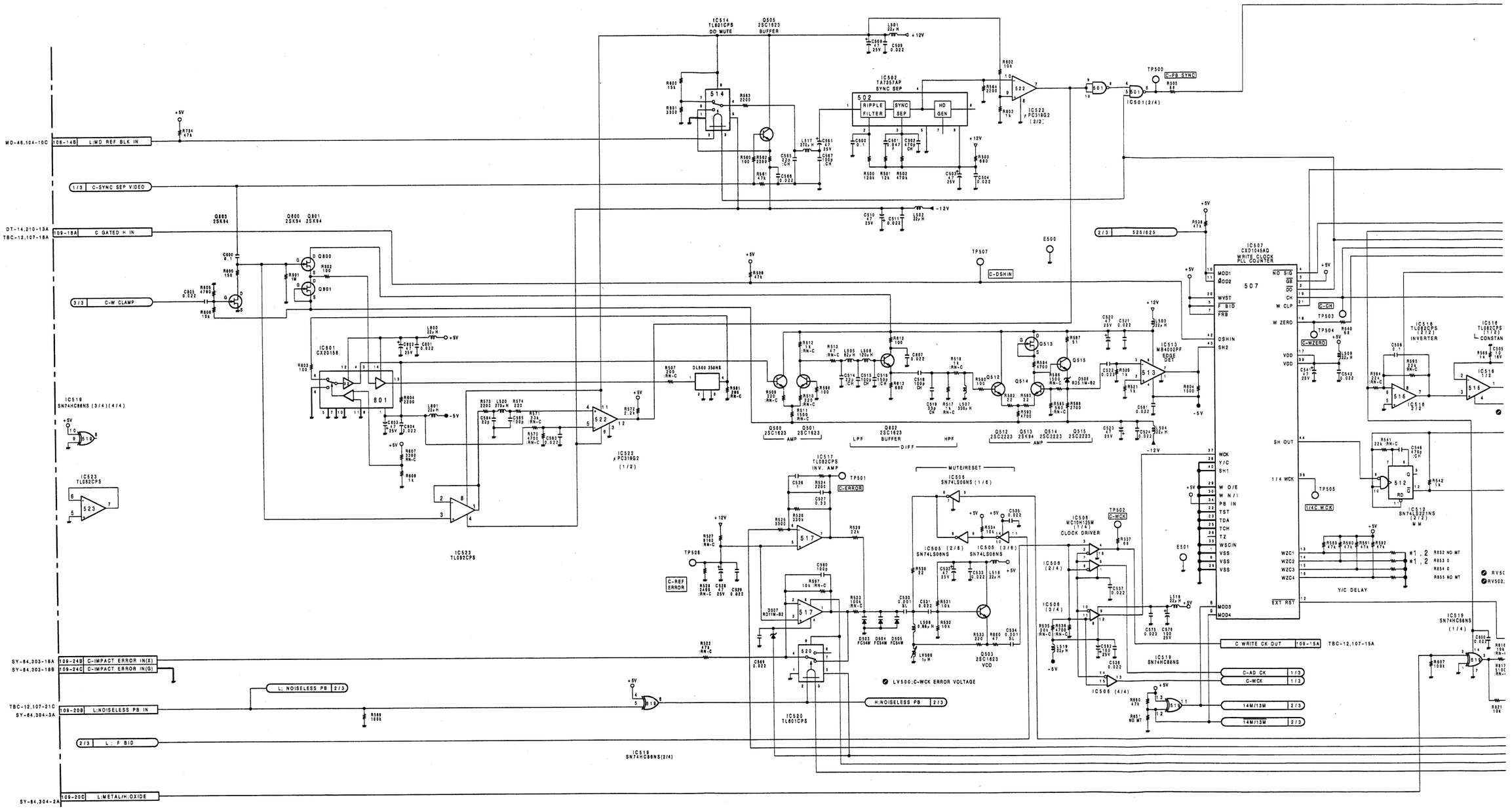

A B C D E F G H

TBC-7D(3/3)

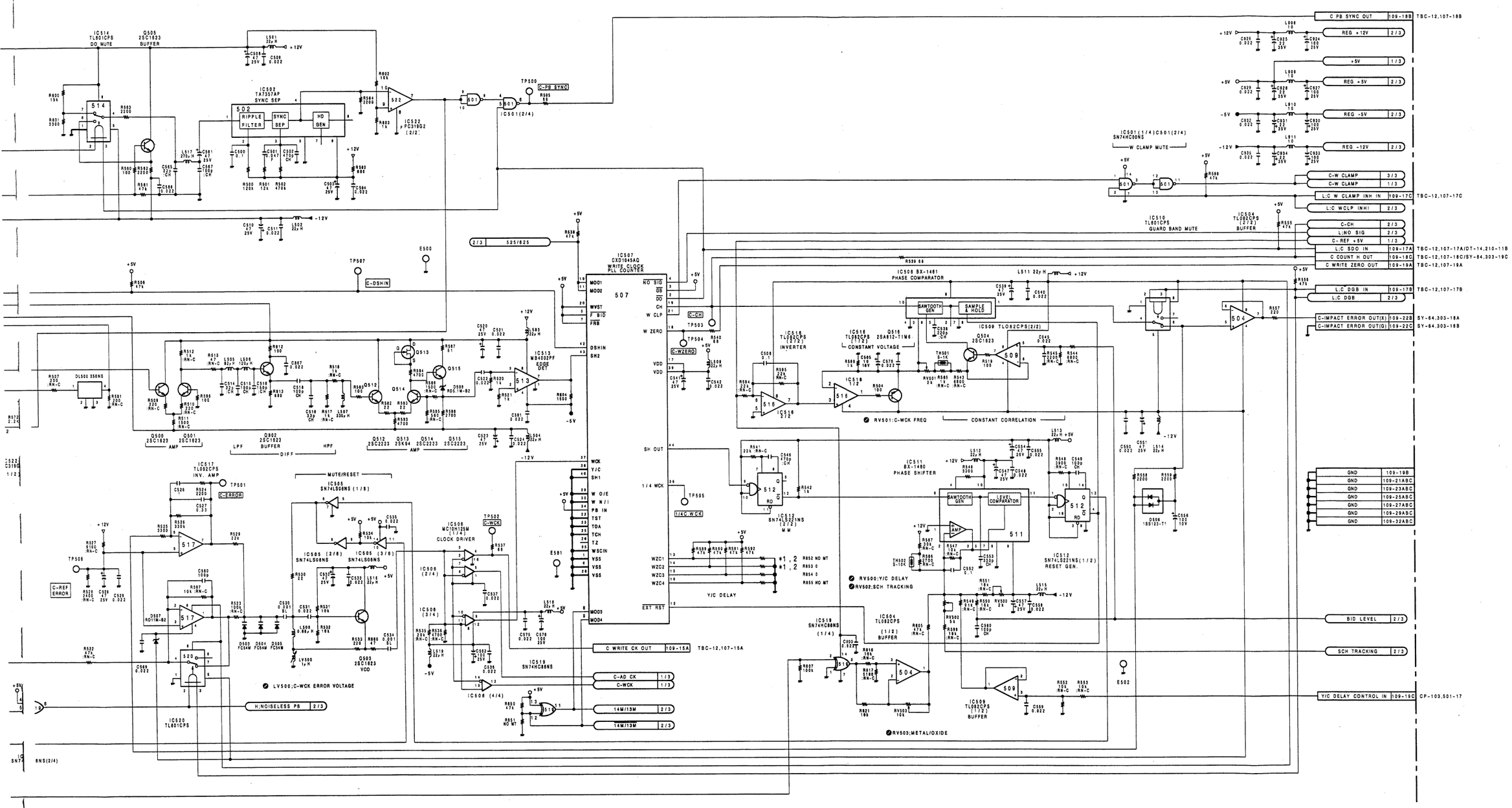

NOTE:			
ADDRESS	MARK	CHANGE INFORMATION	SERIAL NO.
H4	* 1	R853:0 OHM TO NO MT R832:NO MT TO 0 OHM	/10054-
H4	* 2	R853:NO MT TO 0 OHM R832:0 OHM TO NO MT	/10109-

TBC-7D BOARD (3/3)

BOARD NO.1-622-548-15
BVW-85P(EK) ;/10001-

TBC-7D; TIME BASE CORRECTOR

TBC-7D(1-622-548-15)
BVW-85P

CN108	G-7	IC210	G-4	LV500	B-5	RV201	F-7
CN109	D-7	IC211	G-3			RV202	J-5
		IC212	F-7	*Q100	E-2	RV203	J-6
DL500	B-1	IC213	G-6	*Q101	E-4	RV400	C-2
		IC214	H-6	*Q102	E-4	RV401	D-2
*D100	E-1	IC215	H-4	*Q103	F-1	RV402	C-4
*D200	G-2	IC216	J-4	*Q104	F-2	RV500	C-7
D202	H-5	IC217	H-2	*Q105	E-1	RV501	A-2
D203	H-5	IC218	H-1	*Q106	E-1	RV502	C-6
D204	H-5	IC219	E-6	*Q201	H-5	RV503	C-6
D205	J-5	IC220	G-6	*Q203	G-6	RV610	E-3
D206	J-5	IC221	J-6	*Q204	G-1		
D207	J-5	IC222	H-7	*Q205	G-1	S101	H-1
*D208	G-6	IC223	G-7	*Q206	G-1	S200	G-1
*D209	H-2	IC224	H-6	*Q207	G-2		
*D210	J-3	IC225	J-6	*Q208	G-2	TH201	F-7
*D211	J-6	IC226	J-5	*Q211	J-2	TH202	J-3
D212	J-5	IC228	J-6	*Q212	J-3	TH501	A-3
D213	J-5	IC231	G-7	*Q213	J-2	TH502	C-5
*D214	H-2	IC232	J-6	*Q214	H-3		
*D400	E-1	IC234	G-6	*Q215	G-7	TP100	E-1
D503	B-5	IC235	H-3	*Q220	J-1	TP101	G-2
D504	B-5	IC236	H-2	*Q221	J-1	TP102	F-3
D505	A-5	IC237	G-1	*Q222	J-4	TP200	G-5
*D506	A-6	IC238	J-2	Q223	J-5	TP201	H-5
*D507	B-6	IC239	H-6	*Q224	H-6	TP202	J-6
*D508	C-2	IC240	G-2	*Q225	H-6	TP203	G-4
*D650	E-3	IC241	J-6	*Q226	J-6	TP204	G-4
*D680	F-3	IC401	D-2	*Q227	G-7	TP205	G-3
*D700	J-5	IC403	C-4	*Q228	H-6	TP206	H-4
*D704	J-5	IC404	D-5	*Q229	H-1	TP207	J-5
*D705	J-6	IC501	A-5	*Q230	H-1	TP208	F-6
*D706	J-6	IC502	C-1	*Q400	E-2	TP400	E-1
*D707	G-2	IC504	B-6	*Q401	D-1	TP401	C-2
		IC505	B-4	*Q402	E-1	TP402	C-3
E100	F-1	IC506	B-4	*Q403	E-1	TP500	B-4
E101	E-3	IC507	B-3	*Q404	E-1	TP501	B-5
E200	H-2	IC508	A-3	*Q500	B-2	TP502	C-5
E201	H-5	IC509	A-6	*Q501	B-2	TP503	B-4
E202	J-4	IC510	A-6	*Q503	B-4	TP504	B-3
E400	D-1	IC511	D-6	*Q504	A-3	TP505	C-4
E401	C-3	IC512	C-5	*Q505	A-1	TP506	B-6
E500	A-1	IC513	C-3	*Q512	B-2	TP507	C-3
E501	B-4	IC514	A-1	*Q513	B-2		
E502	A-6	IC516	A-3	*Q514	C-3		
		IC517	A-5	*Q515	B-2		
FL100	E-1	IC519	B-6	*Q516	A-3		
FL400	D-1	IC520	A-5	*Q610	D-4		
		IC522	B-3	*Q611	D-4		
IC101	F-2	IC523	C-1	*Q680	G-3		
IC102	E-5	IC610	D-5	*Q681	D-3		
IC103	E-4	IC611	D-4	*Q800	C-2		
IC105	F-4	IC650	E-3	*Q801	C-2		
IC108	F-5	IC700	J-1	*Q802	B-3		
IC201	H-1	IC701	J-2	*Q803	C-1		
IC203	G-2	IC702	G-5				
IC205	H-2	IC720	F-6	RV100	F-2		
IC206	G-6	IC801	B-1	RV101	G-2		
IC207	H-5			RV102	E-3		
IC208	J-4	LV200	H-5	RV103	F-4		
IC209	H-4	LV201	J-4	RV200	J-3		

* : SOLDERING SIDE

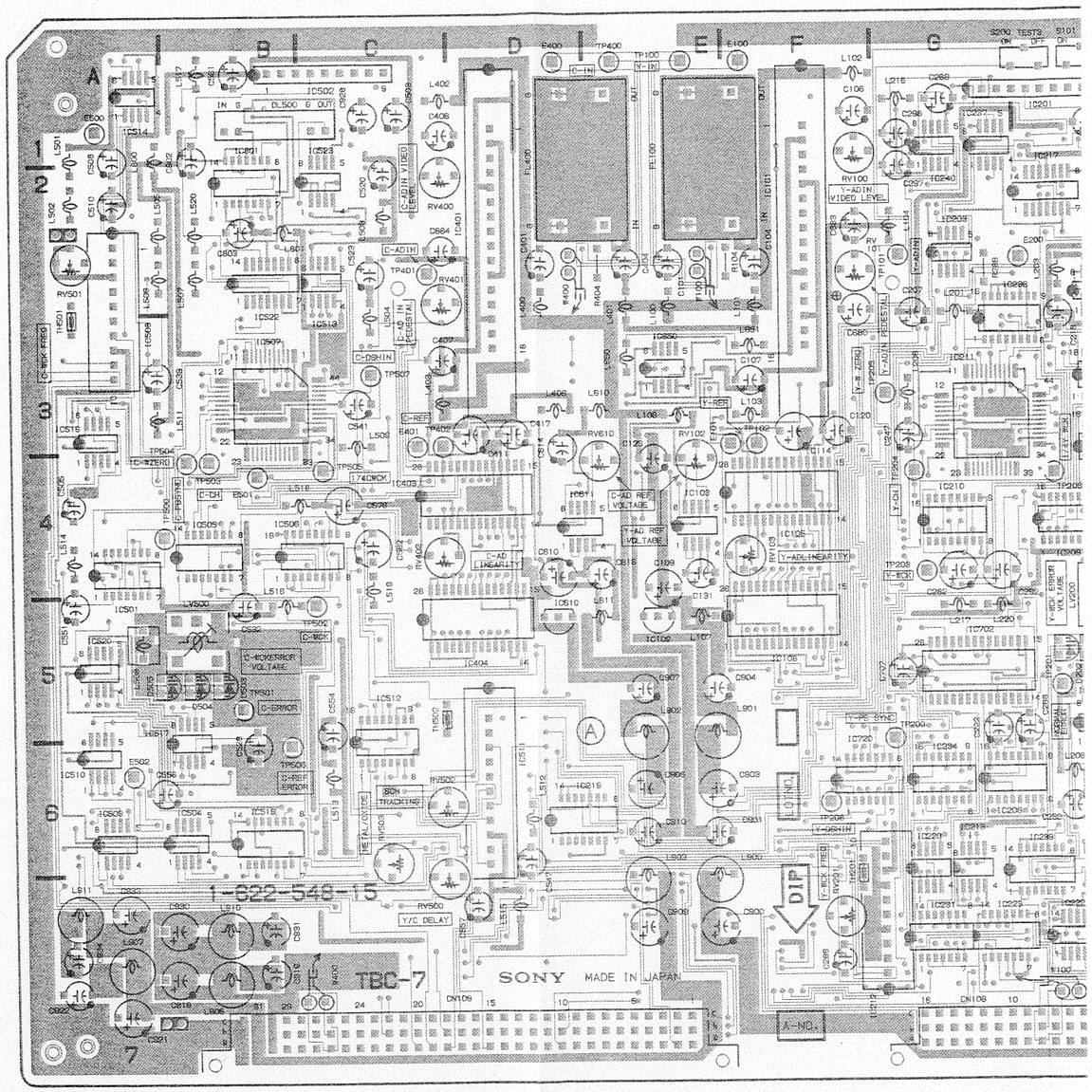

A Side is

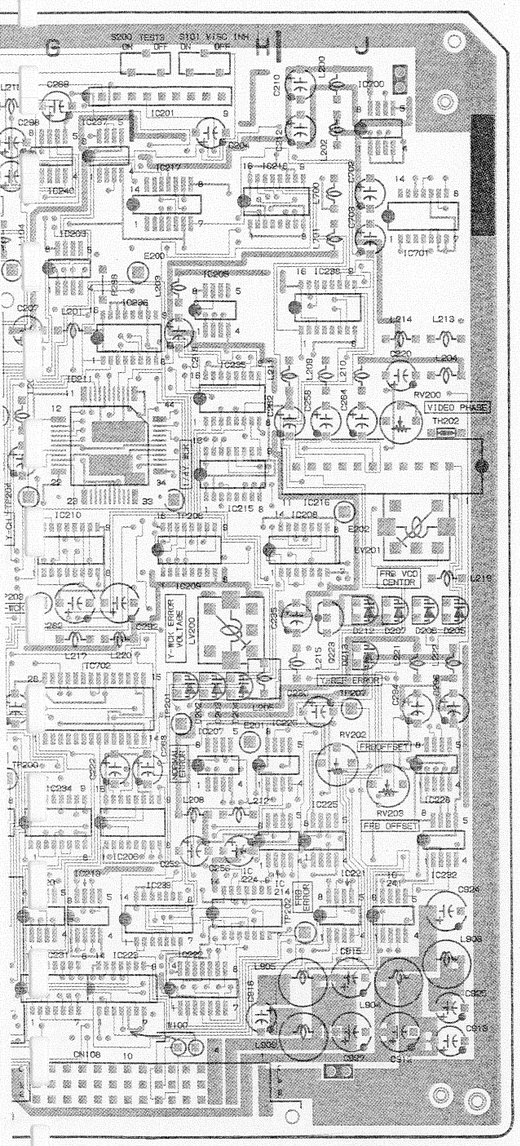

TBC-7D 1-622-548-15 A SIDE

A Side is the same as Component Side.

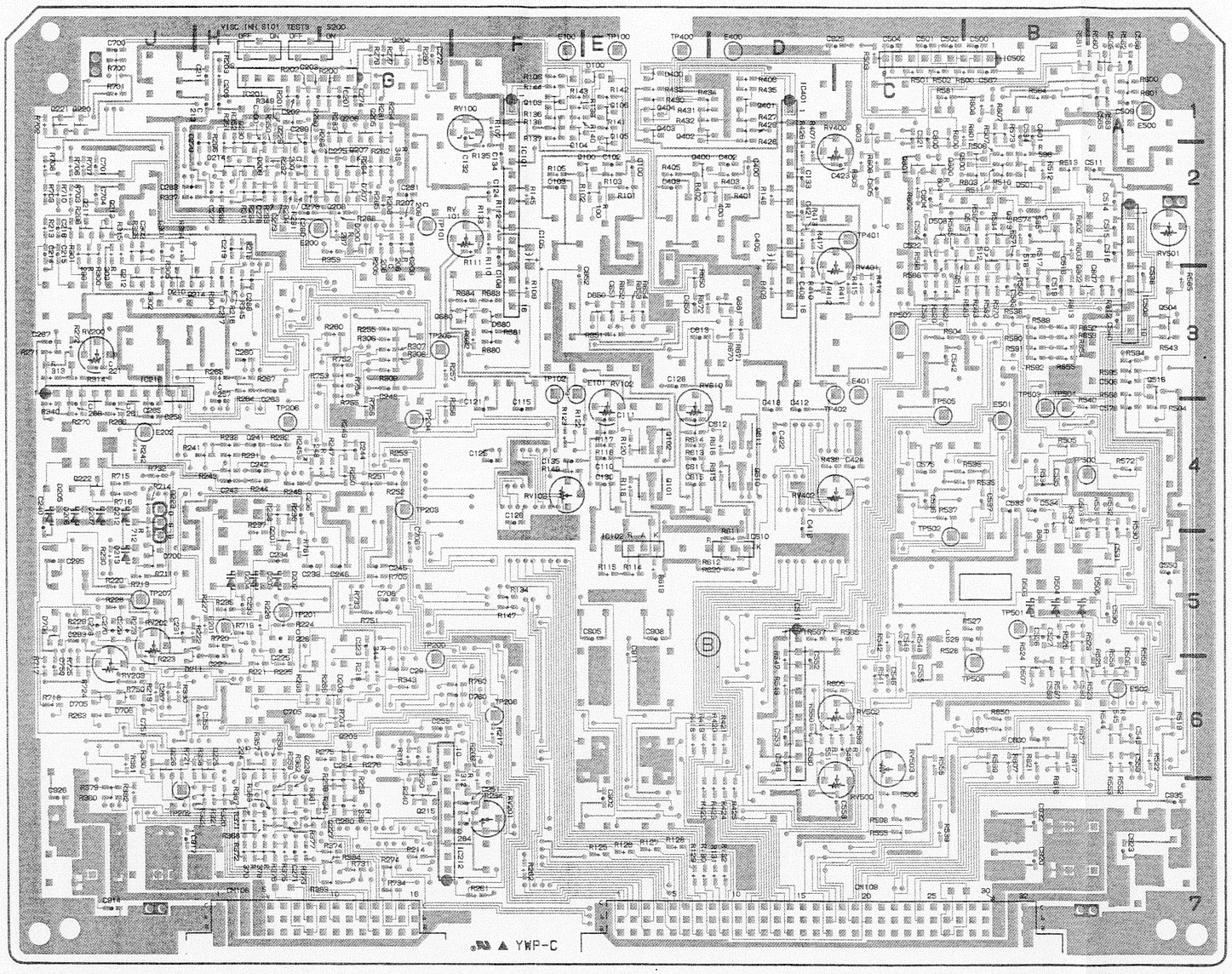

TBC-7D 1-622-548-15 B SIDE

B Side is the same as Solder Side.

TBC-12PC(1/3); Y MAIN MEMORY
TG-52A; TIMING GENERATOR

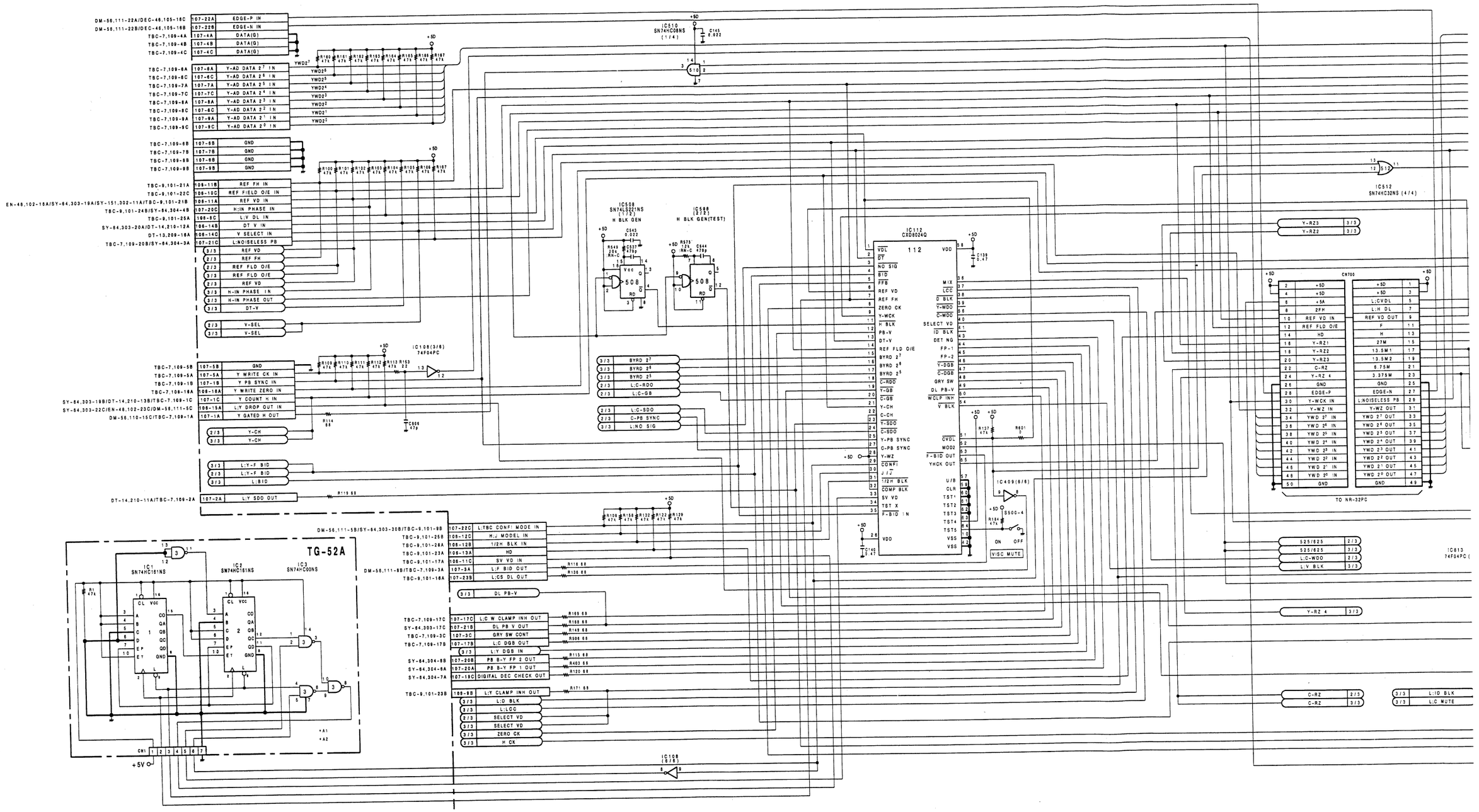

A B C D E F G H

TBC-12PC(1/3) TG-52A

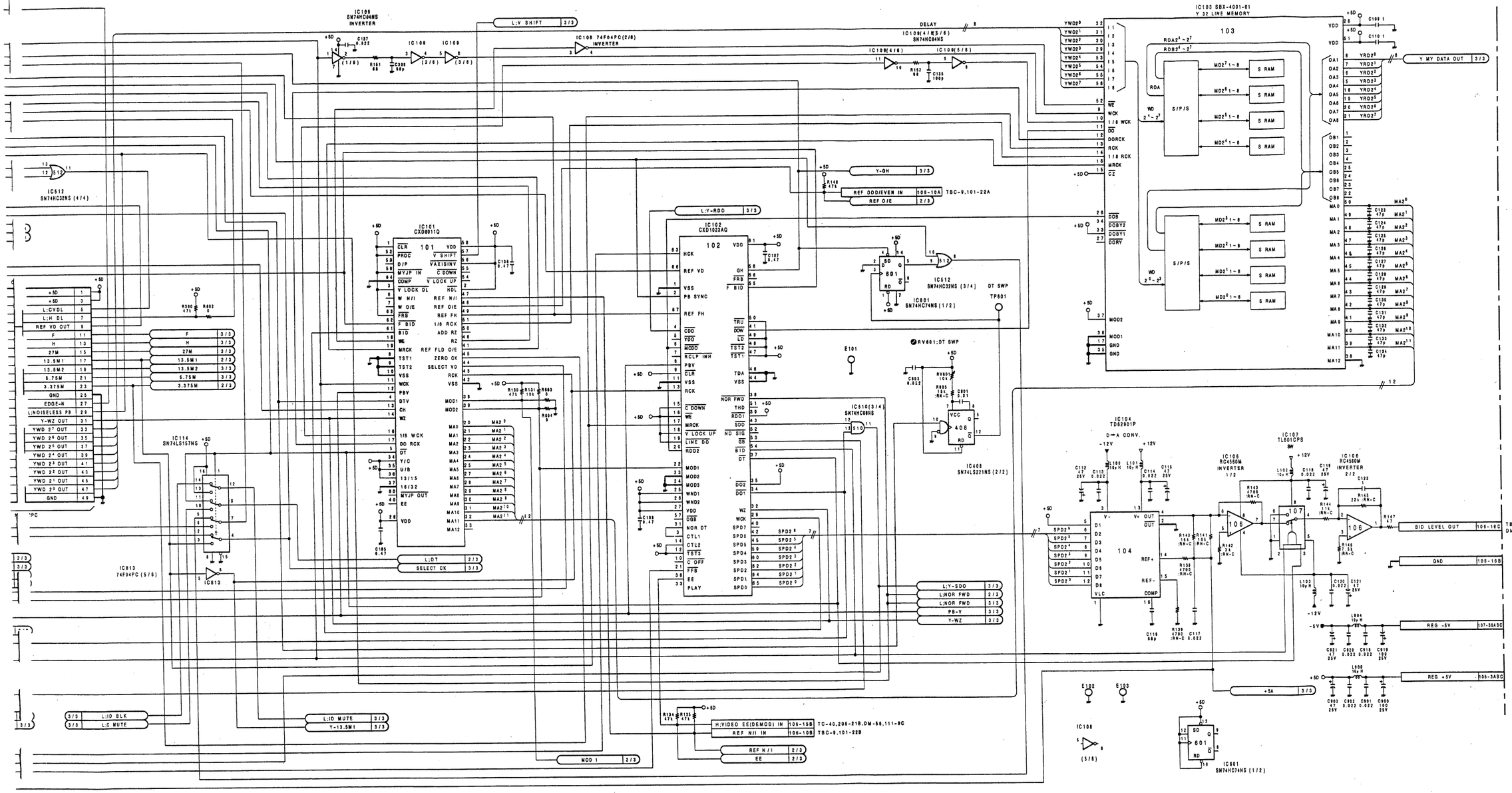

TBC-12PC BOARD (1/3)

BOARD NO.1-629-462-13

BVW-85P(EK) ;#10001-

TBC-12PC(2/3); C MAIN MEMORY

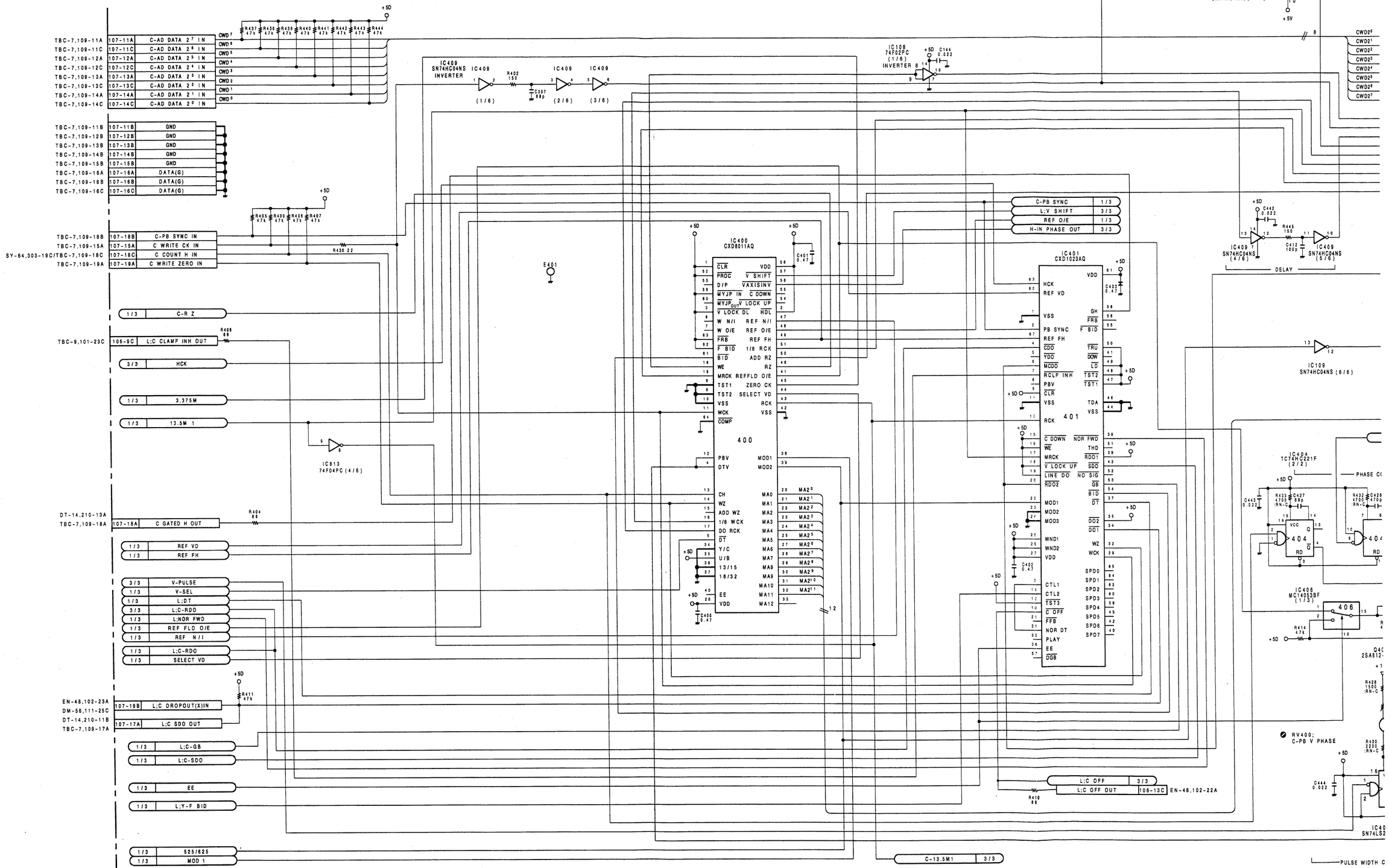

17-211 17-212

A B C D E F G H

TBC-12PC(2/3)

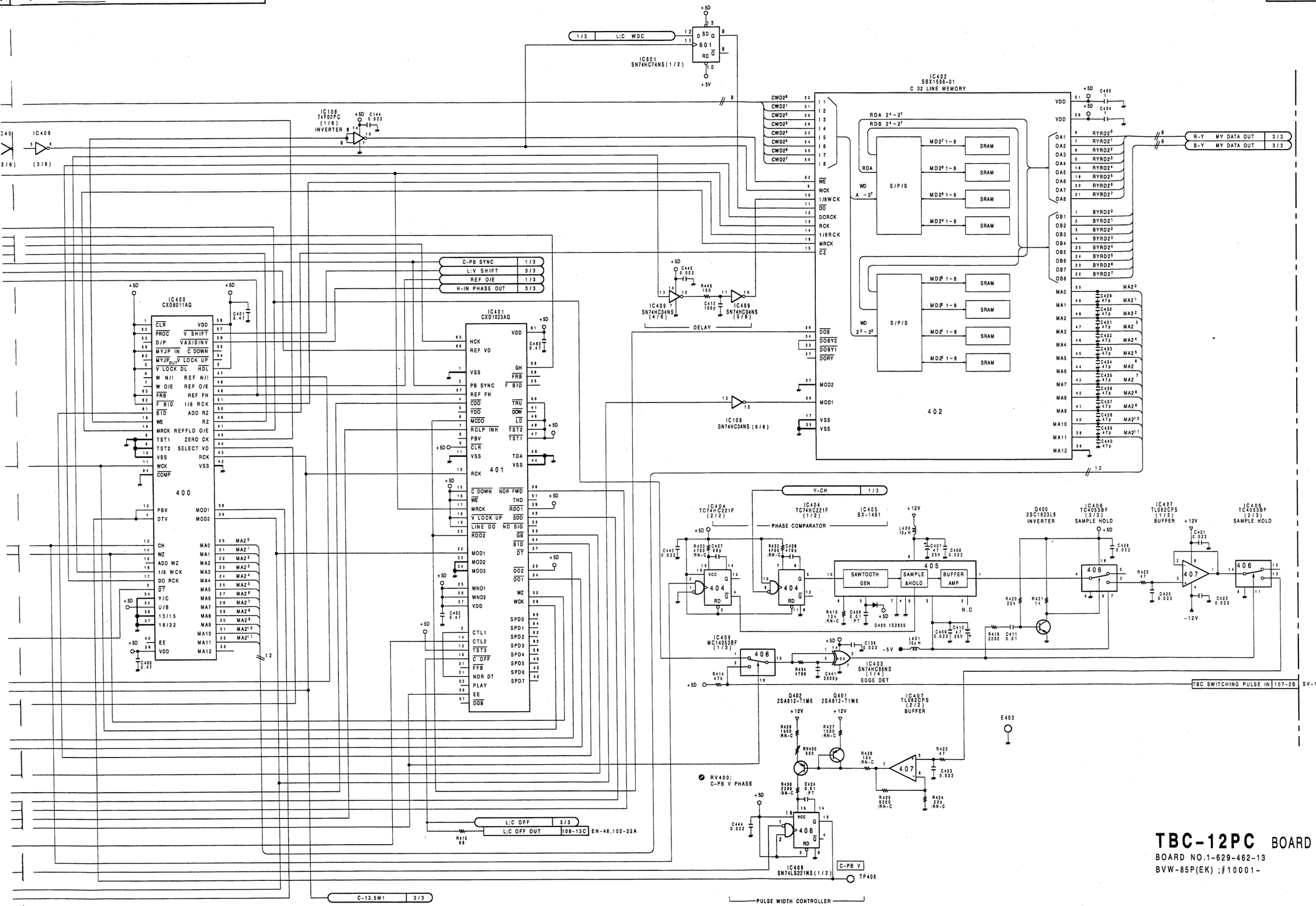

TBC-12PC BOARD (2/3)

BOARD NO.1-629-462-13
BVW-85P(EK) ;#10001-

TBC-12PC(3/3); Y MAIN MEMORY

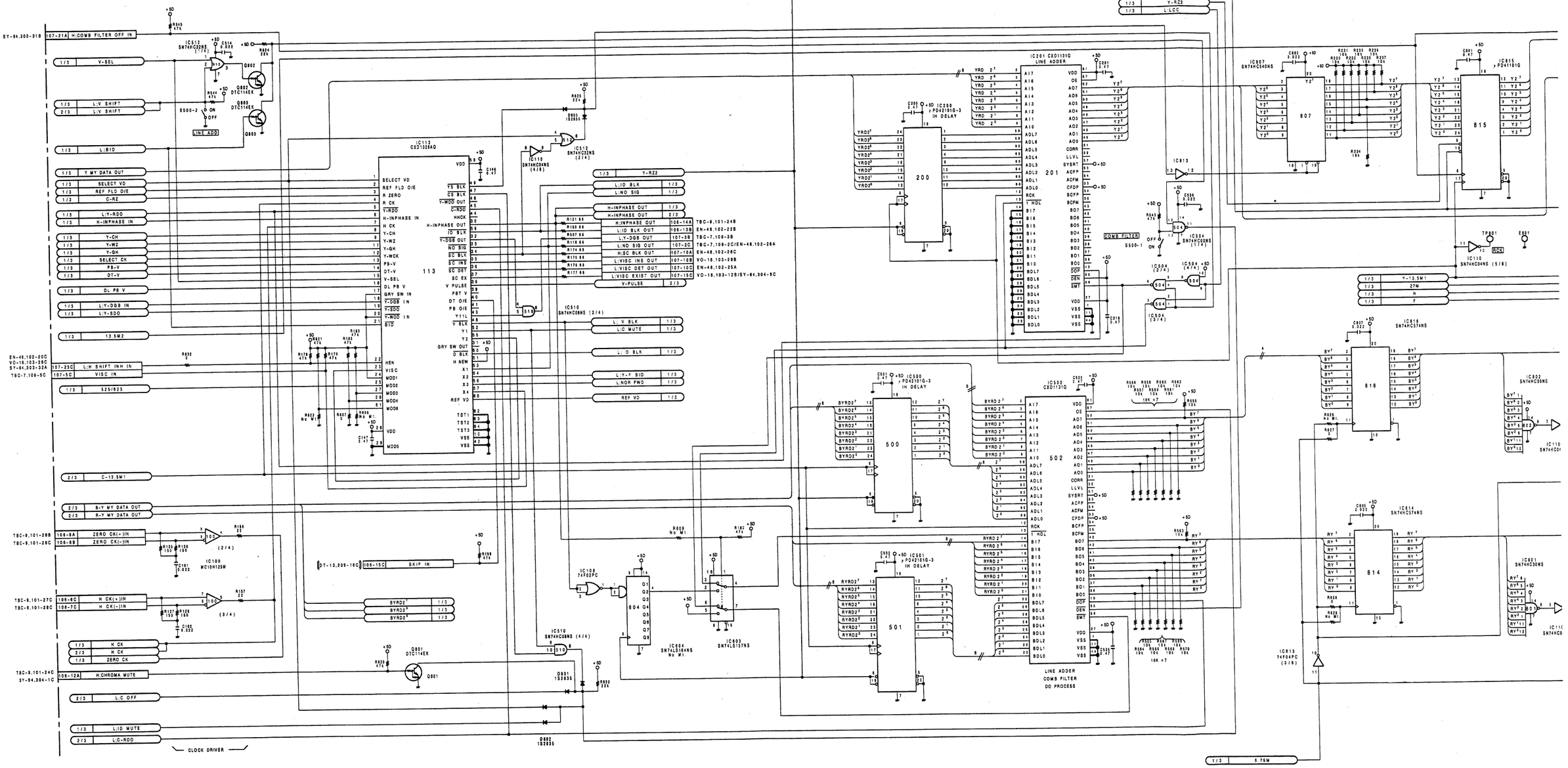

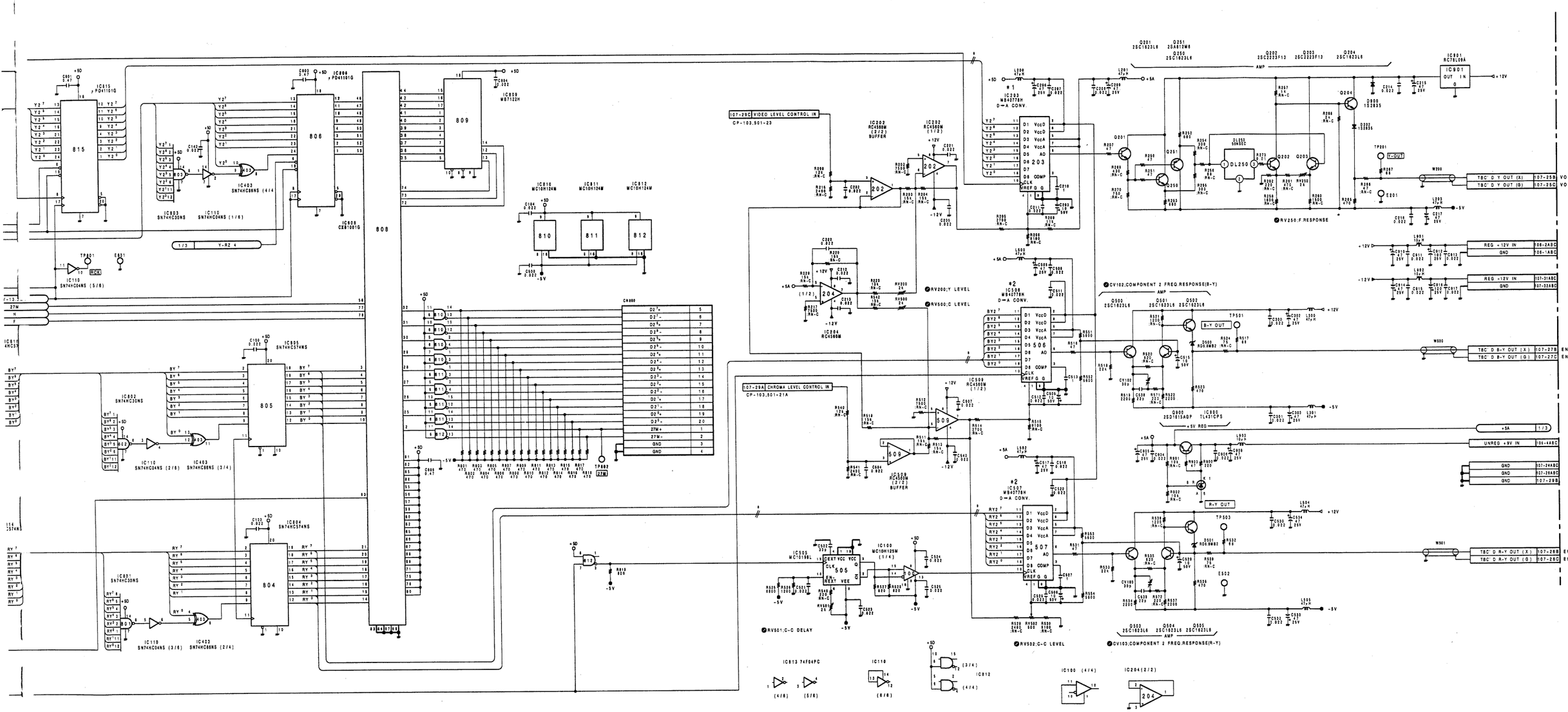

NOTE:

ADDRESS	MARK	CHANGE INFORMATION	SERIAL NO.
M2	# 1	IC TYPE CHANGE IC203:MB40778P TO MB40778H	#10109-
M3,M4	# 2	IC TYPE CHANGE IC506,507: HB40778P TO MB40778H	#10109-

TBC-12PC BOARD (3/3)

BOARD NO.1-629-462-13

BVW-85P(EK) ;#10001-

TBC-12PC TG-52A

TBC-12PC(1-629-462-13)
BVW-85P

CN1808	J-2	IC505	E-2
CN1809	H-2	IC506	A-3
		IC507	B-3
CN106	G-7	IC508	C-5
CN107	D-7	IC509	D-1
CN700	E-6	IC510	G-6
CN800	G-1	IC601	B-5
		IC603	B-5
CV102	A-1	IC801	F-2
CV103	B-1	IC802	D-3
		IC803	G-3
DL250	C-1	IC804	E-2
		IC805	D-2
*D202	B-1	IC806	J-3
*D400	B-7	IC807	H-3
*D500	B-2	IC810	H-1
*D501	C-2	IC811	H-1
*D801	G-6	IC812	J-1
*D802	G-6	IC813	G-2
*D803	F-5	IC814	E-3
*D900	A-1	IC815	D-2
		IC816	D-3
E101	G-2	IC900	E-1
E102	J-3	IC901	A-1
E103	J-7		
E201	C-1	*Q201	C-1
E401	A-7	*Q202	B-1
E502	B-1	*Q203	B-1
		*Q204	B-1
IC100	D-2	*Q250	C-1
*IC101	J-4	*Q251	C-1
*IC102	H-5	*Q400	B-6
IC103	H-4	*Q401	B-6
IC104	J-6	*Q402	B-6
IC106	H-7	*Q500	A-2
IC107	H-7	*Q501	B-2
IC108	E-4	*Q502	A-2
IC109	J-6	*Q503	B-2
IC110	G-2	*Q504	B-2
IC112	D-5	*Q505	C-2
IC113	F-5	*Q801	F-7
IC114	C-5	*Q802	F-3
IC200	F-3	*Q803	F-3
IC201	F-4	Q900	F-1
IC202	E-1		
IC203	C-1	RV200	E-1
IC204	E-1	RV250	B-1
*IC400	B-2	RV400	C-6
*IC401	B-4	RV500	E-1
IC402	B-4	RV501	E-1
IC403	E-3	RV502	D-1
IC404	B-7	RV601	C-7
IC405	B-6		
IC406	B-6	S500	F-1
IC407	A-6		
IC408	C-6	TP201	B-1
IC409	A-5	TP406	C-6
IC500	C-3	TP501	A-1
IC501	C-4	TP503	B-1
IC502	D-4	TP601	A-5
IC504	F-2	TP801	H-1
		TP802	G-1

* : SOLDERING SIDE

TBC-12PC; TIME BASE CORRECTOR
TG-52A; TIMING GENERATOR

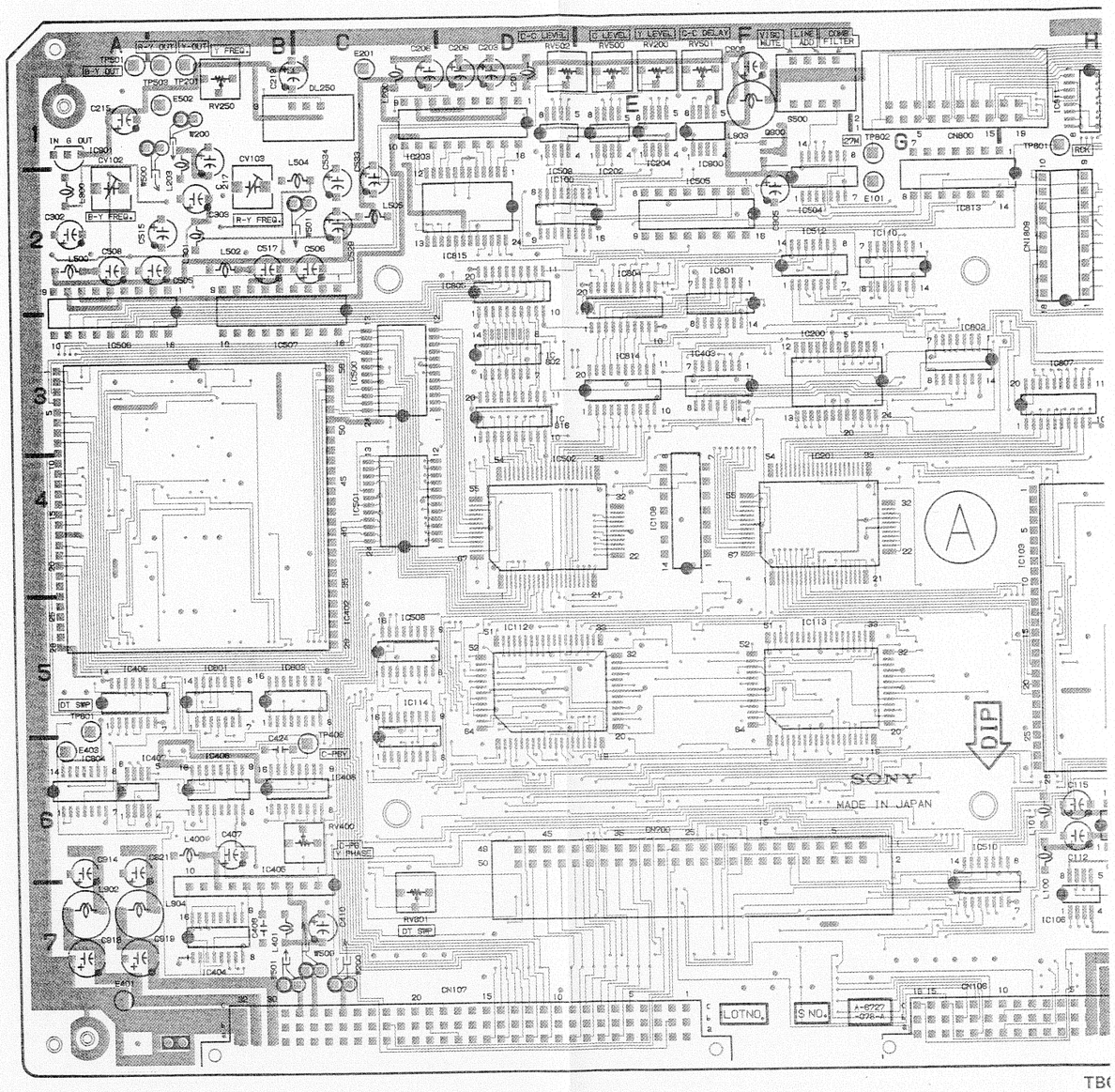

TBC

A Side is the

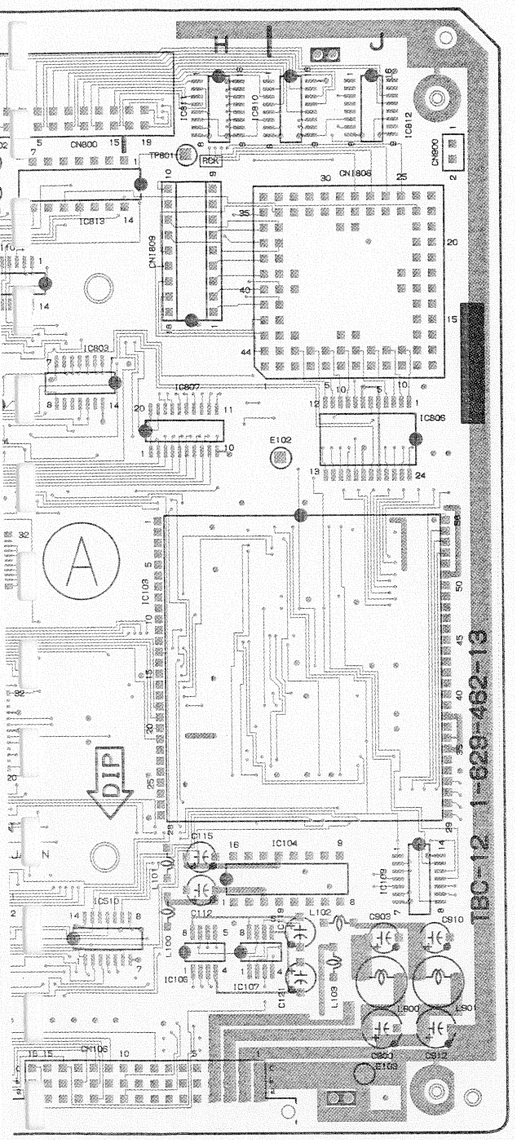

TBC-12PC 1-629-462-13 A SIDE

A Side is the same as Component Side.

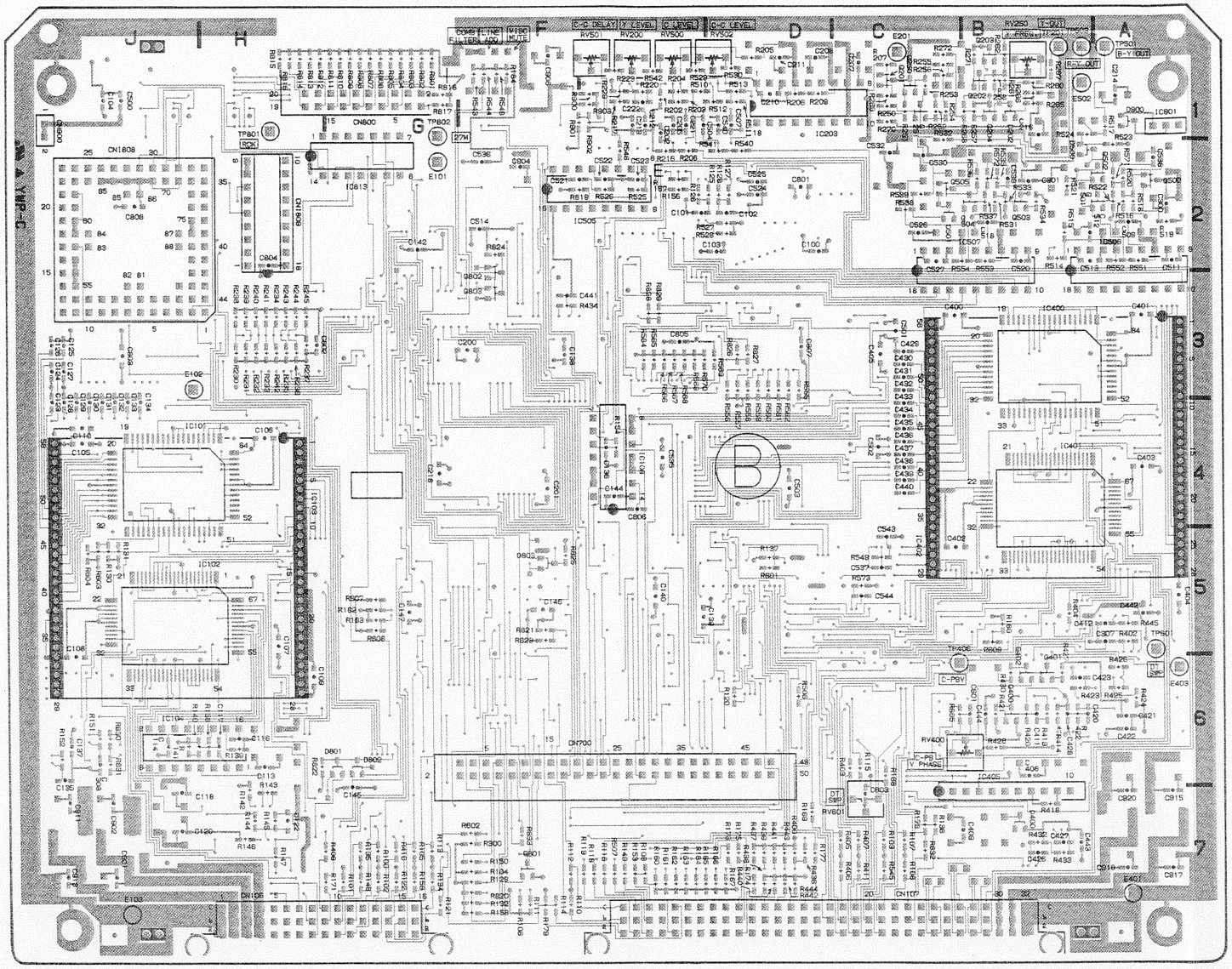

TBC-12PC 1-629-462-13 B SIDE

B Side is the same as Solder Side.

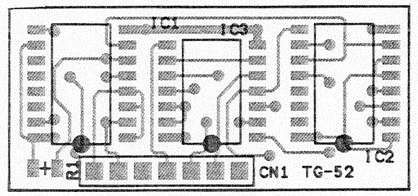

TG-52A 1-635-406-11 A SIDE

A Side is the same as Component Side.

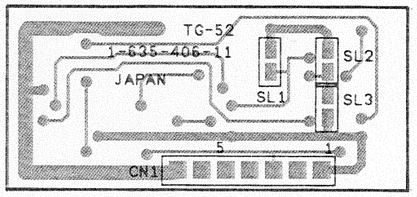

TG-52A 1-635-406-11 B SIDE

B Side is the same as Solder Side.

NR-32PC; Y DIGITAL NOISE REDUCTION, READ CLOCK GENERATOR

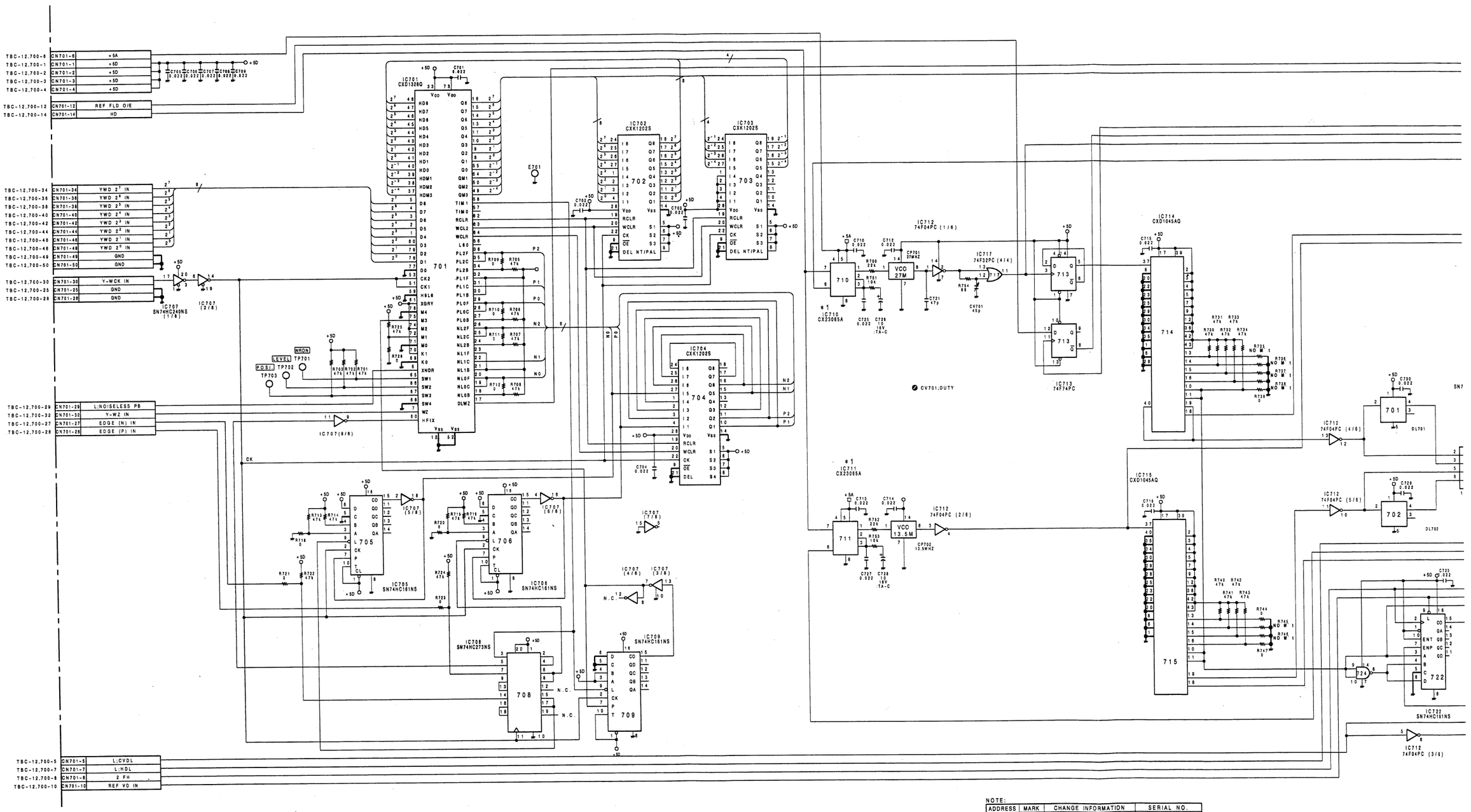

NOTE:

ADDRESS	MARK	CHANGE INFORMATION	SERIAL NO.
F3	*1	IC TYPE CHANGE IC710,711: CX23065 TO CX23065A	#10074-

NR-32PC

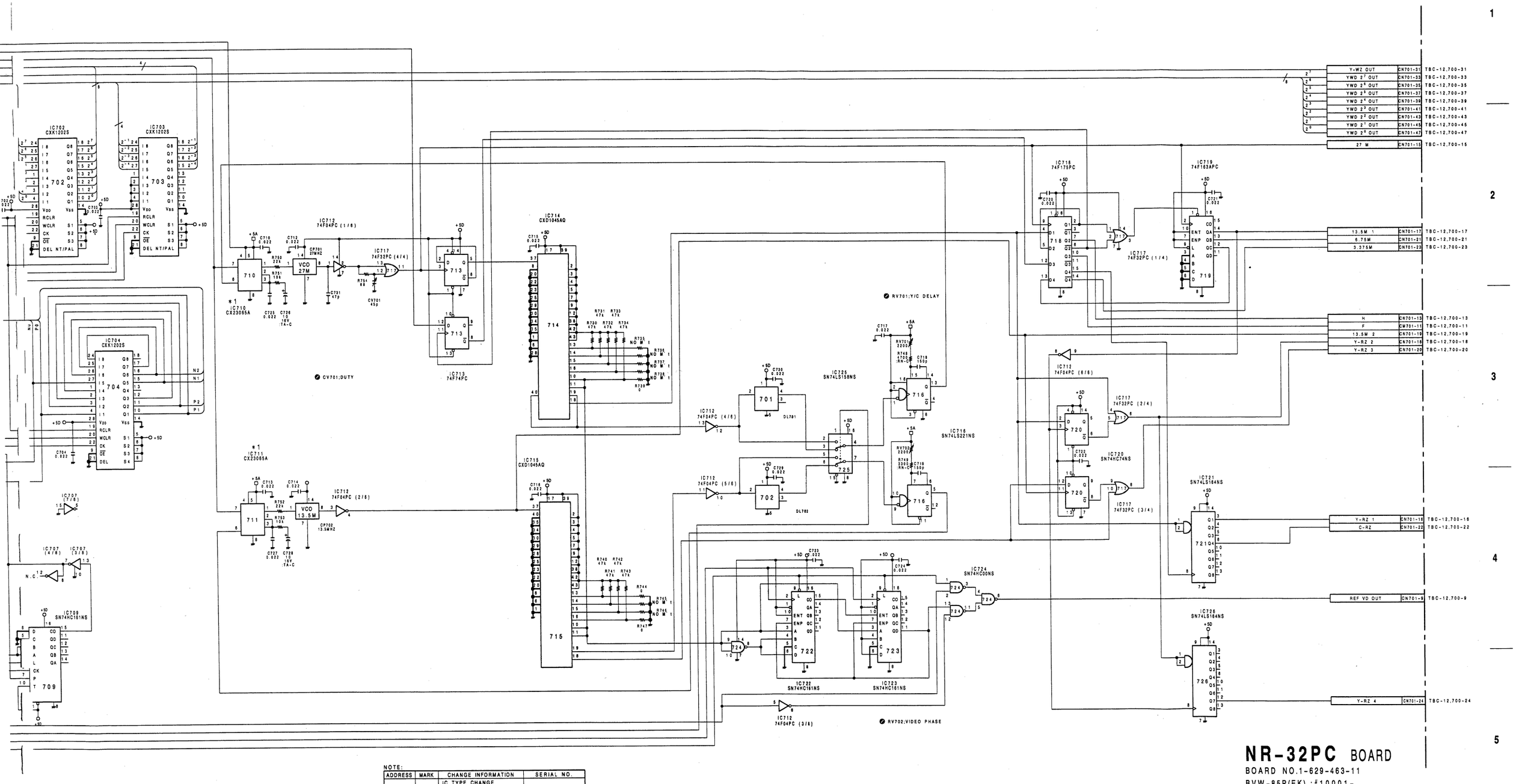

NOTE:

ADDRESS	MARK	CHANGE INFORMATION	SERIAL NO.
F3	*1	IC TYPE CHANGE IC710,711: CX23065 TO CX23065A	#10074-

NR-32PC BOARD

BOARD NO.1-629-463-11

BVW-85P(EK) ;#10001-

NR-32PC; Y DIGITAL NOISE REDUCTION,READCLOCK GENERATOR

NR-32PC(1-629-463-11)
BVW-85P

CN701	C-4
CV701	C-4
DL701	E-2
DL702	D-2
*E701	B-2
IC701	B-1
IC702	A-4
IC703	A-4
IC704	A-3
IC705	B-1
IC706	A-1
IC707	B-1
IC708	A-1
IC709	A-1
IC710	E-3
IC711	E-4
IC712	D-4
IC713	D-3
IC714	D-1
IC715	D-1
IC716	C-3
IC717	C-4
IC718	C-4
IC719	B-4
IC720	C-1
IC721	C-1
IC722	C-2
IC723	C-2
IC724	D-2
IC725	D-3
IC726	D-3
RV701	C-3
RV702	C-3
*TP701	A-2
*TP702	B-2
*TP703	A-2

* : SOLDERING SIDE

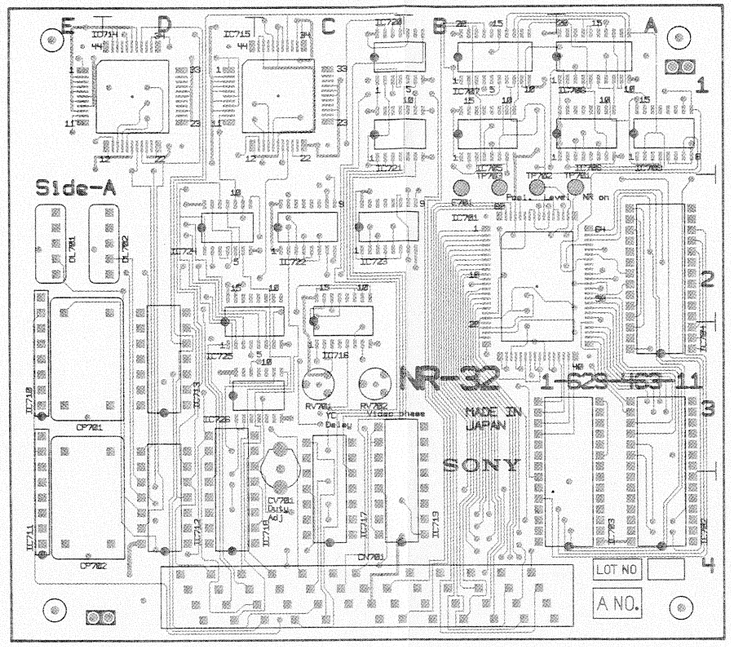

NR-32PC 1-629-463-11 A SIDE

A Side is the same as Component Side.

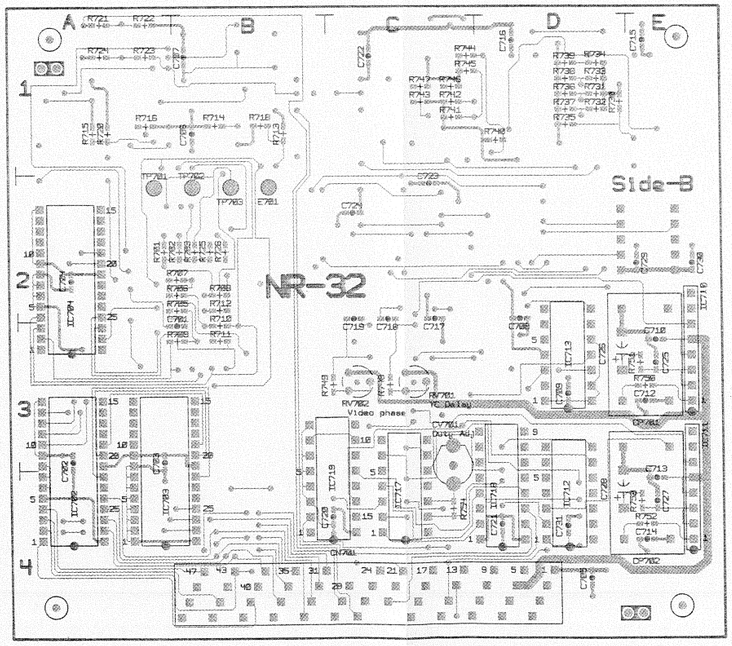

NR-32PC 1-629-463-11 B SIDE

B Side is the same as Solder Side.

TBC-9PC(1/2); REFERENCE SIGNAL GENERATOR

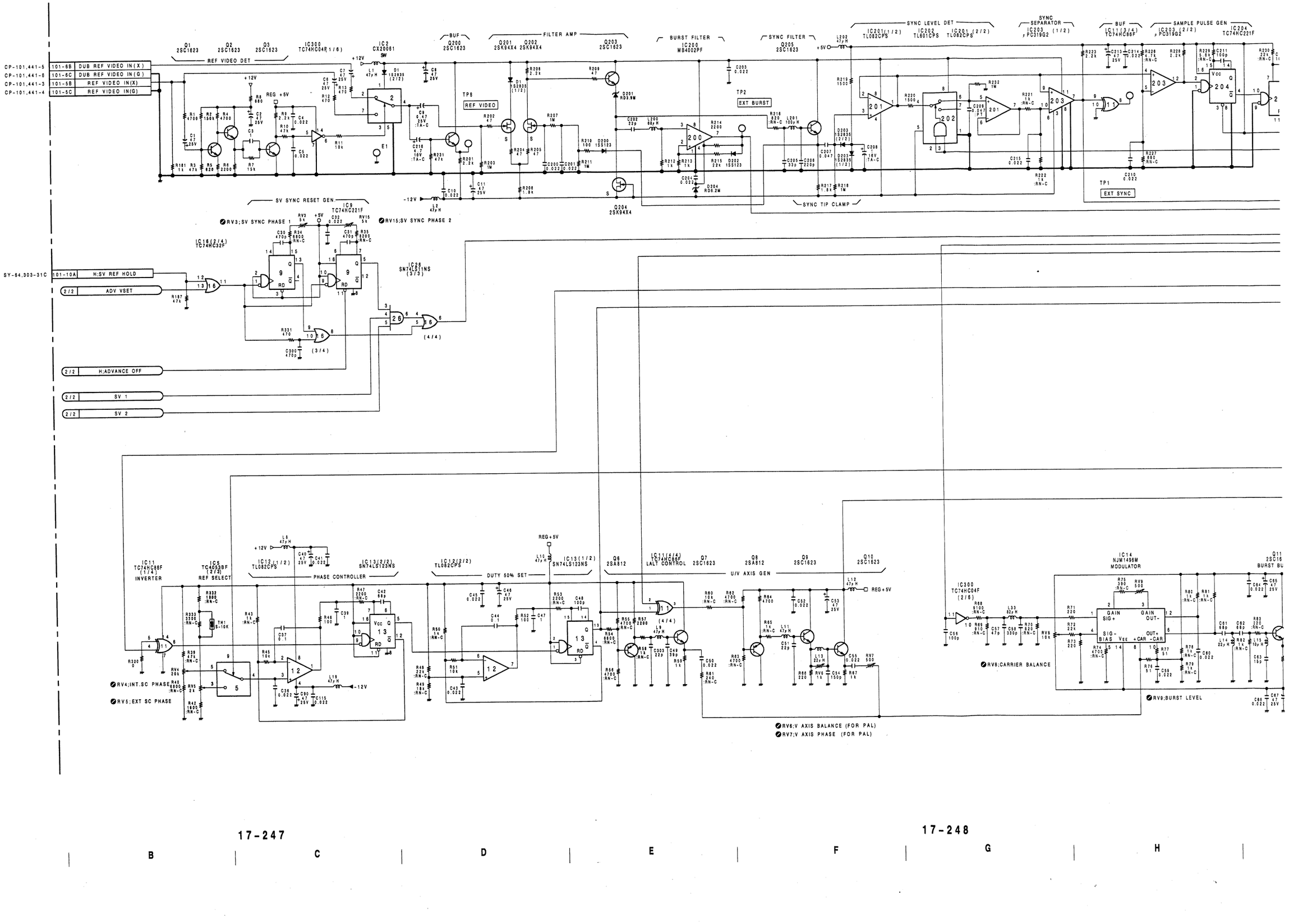

17-247 17-248

A B C D E F G H

TBC-9PC(1/2)

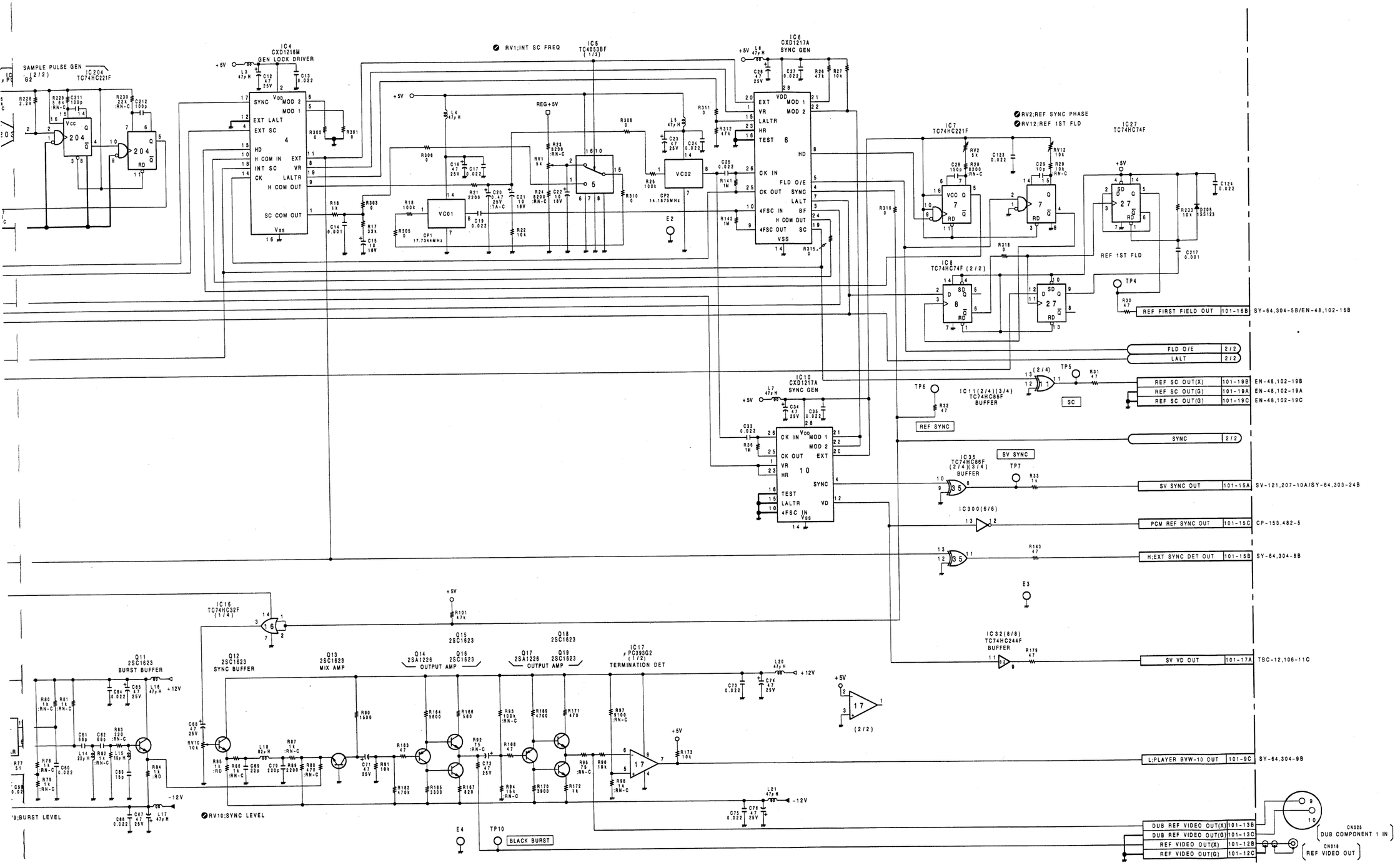

TBC-9PC BOARD (1/2)

BOARD NO.1-622-550-13

BVW-85P(EK) ;#10001-

TBC-9PC(2/2); TBC READ TIMING GENERATOR
TG-52; TIMING GENERATOR

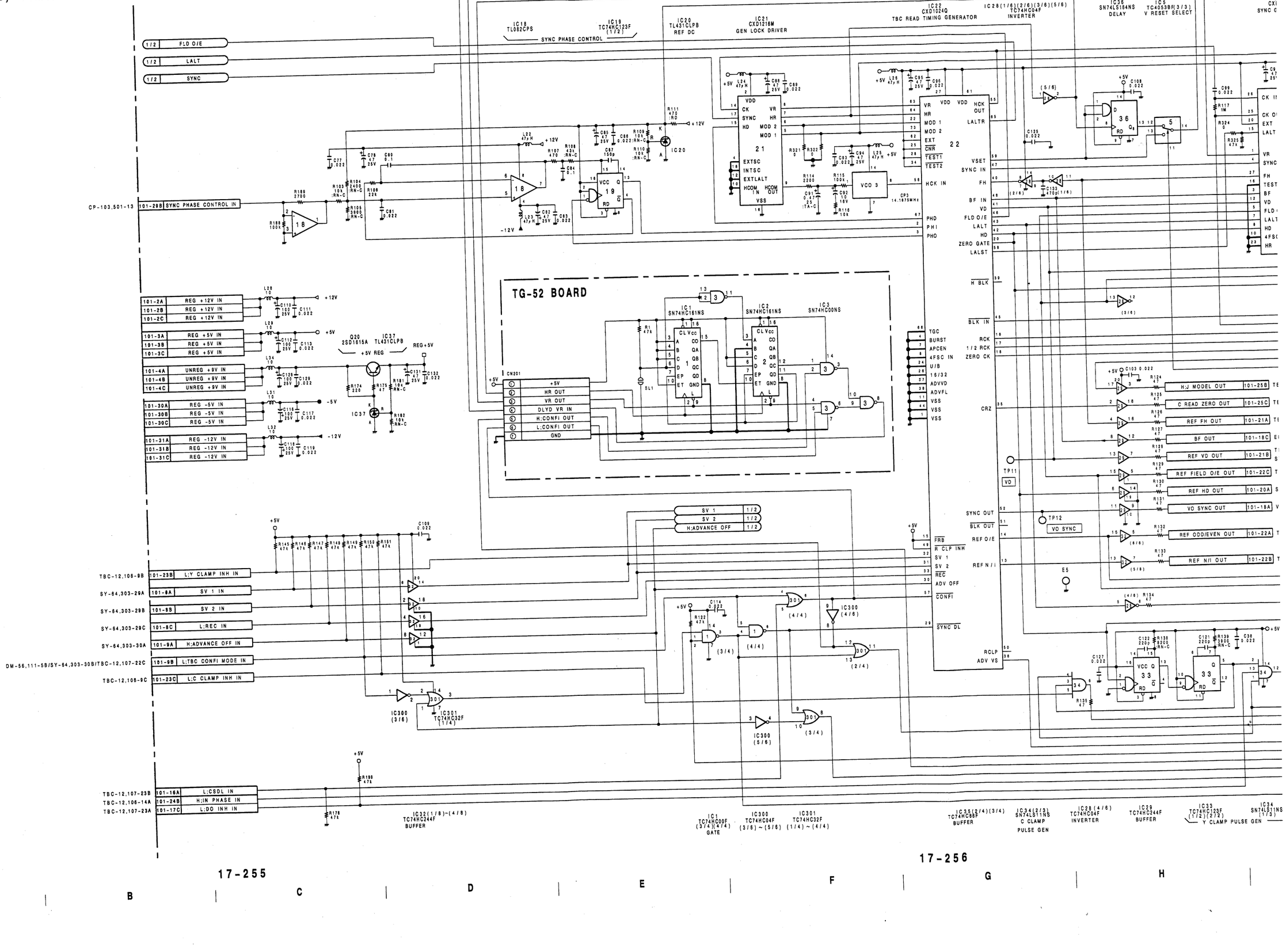

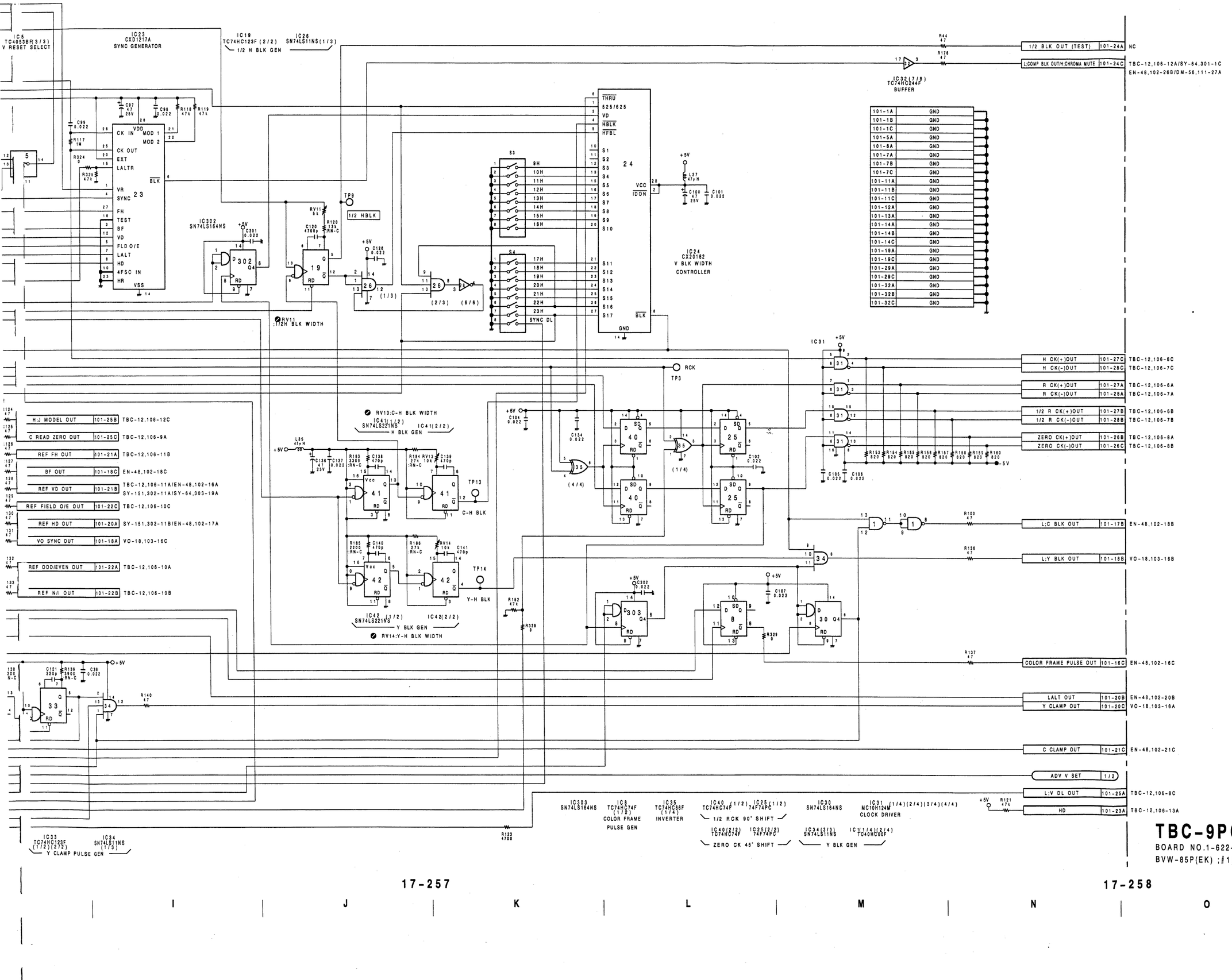

TBC-9PC BOARD **(2/2)**
BOARD NO.1-622-550-13
BVW-85P(EK) ;#10001-

17-257 17-258

I J K L M N O

TBC-9PC(1-622-550-13)

BVW-85P

CN101	B-7	IC303	A-5
*D1	E-5	*Q1	E-7
*D200	E-5	*Q2	E-6
*D201	E-4	*Q3	E-6
*D202	E-4	*Q6	D-5
*D203	E-3	*Q7	C-5
*D204	E-4	*Q8	D-5
*D205	B-4	*Q9	D-5
		*Q10	C-5
E1	E-5	*Q11	C-6
E2	E-1	*Q12	C-7
E3	B-3	*Q14	C-7
E4	B-4	*Q15	D-7
E5	A-7	*Q16	C-7
		*Q17	D-7
IC1	A-6	*Q18	D-7
IC2	E-5	*Q19	D-7
IC4	E-2	*Q20	C-5
IC5	D-4	*Q200	E-5
IC6	C-2	*Q201	E-5
IC7	C-4	*Q202	E-4
IC8	D-4	*Q203	E-4
IC10	C-3	*Q204	E-4
IC11	D-5	*Q205	E-4
IC12	D-5		
IC13	E-6	RV1	D-5
IC14	D-6	RV2	D-4
IC16	C-4	RV3	C-3
IC17	D-7	RV4	E-5
IC18	A-1	RV5	D-5
IC19	A-1	RV6	C-5
IC20	A-1	RV7	B-5
IC21	C-2	RV8	D-6
IC22	A-2	RV9	D-6
IC23	C-1	RV10	C-7
IC24	E-1	RV11	B-2
IC25	A-6	RV12	D-4
IC26	B-1	RV13	B-4
IC27	B-4	RV14	A-4
IC28	B-1	RV15	C-3
IC29	B-7		
IC30	A-4	S3	D-1
IC31	A-6	S4	B-1
IC32	B-5		
IC33	A-4	TH1	E-4
IC34	A-4		
IC35	A-5	TP1	D-5
IC36	B-2	TP2	E-3
IC37	C-5	TP3	A-2
IC40	A-5	TP4	B-4
IC41	A-3	TP5	B-5
IC42	B-4	TP6	B-4
IC200	E-4	TP7	B-5
IC201	E-3	TP8	E-5
IC202	E-3	TP9	A-1
IC203	E-2	TP10	D-7
IC204	E-2	TP11	A-3
IC300	E-6	TP12	A-3
IC301	B-6	TP13	B-2
IC302	C-1	TP14	B-4

* : SOLDERING SIDE

TBC-9PC; TIME BASE CORRECTOR
TG-52; TIMING GENERATOR

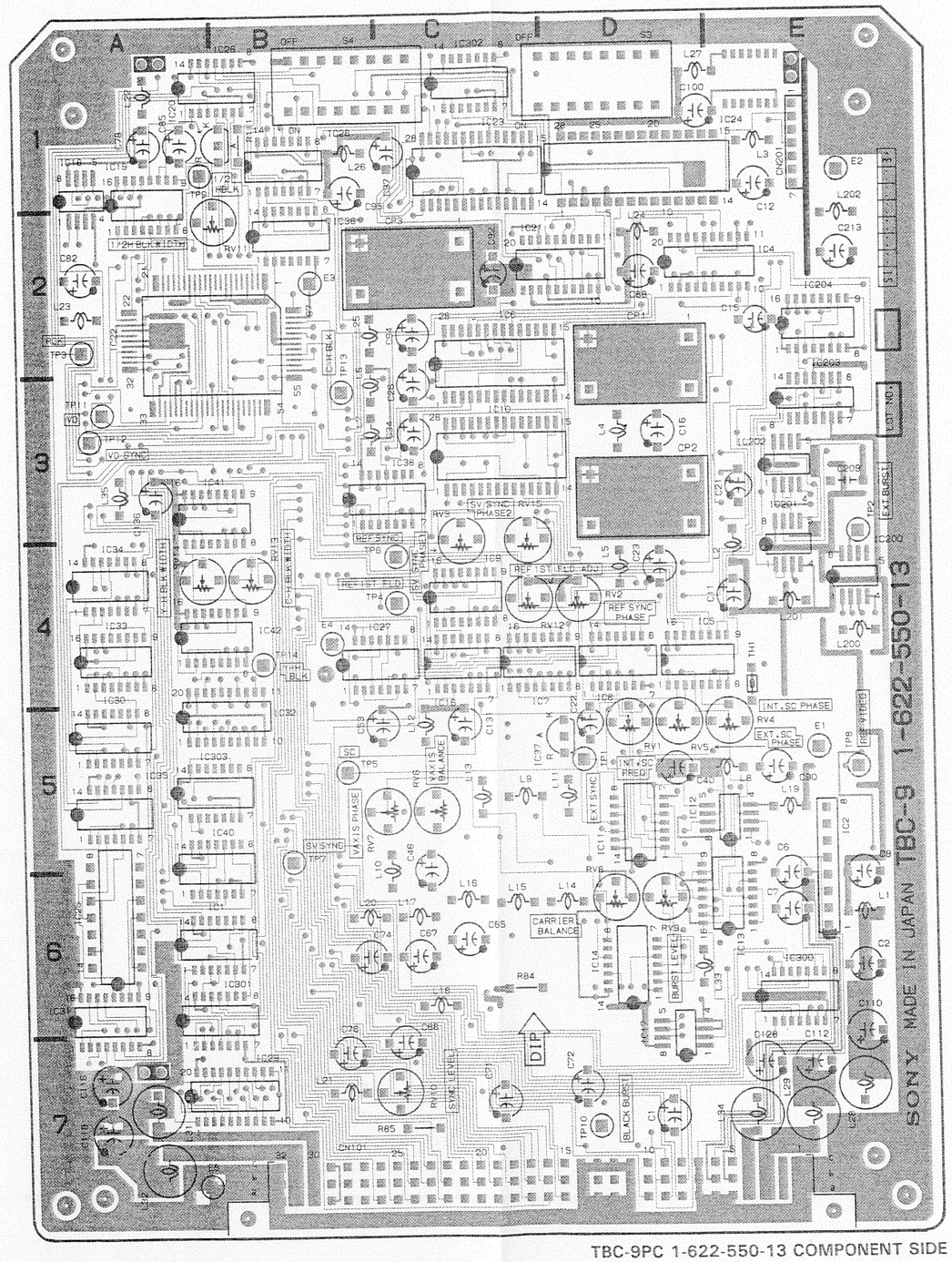

TBC-9PC 1-622-550-13 COMPONENT SIDE

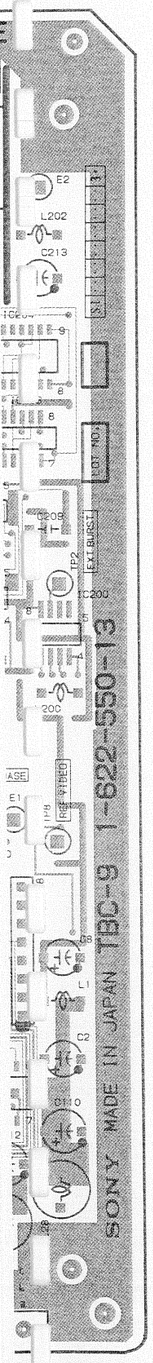

MPONENT SIDE

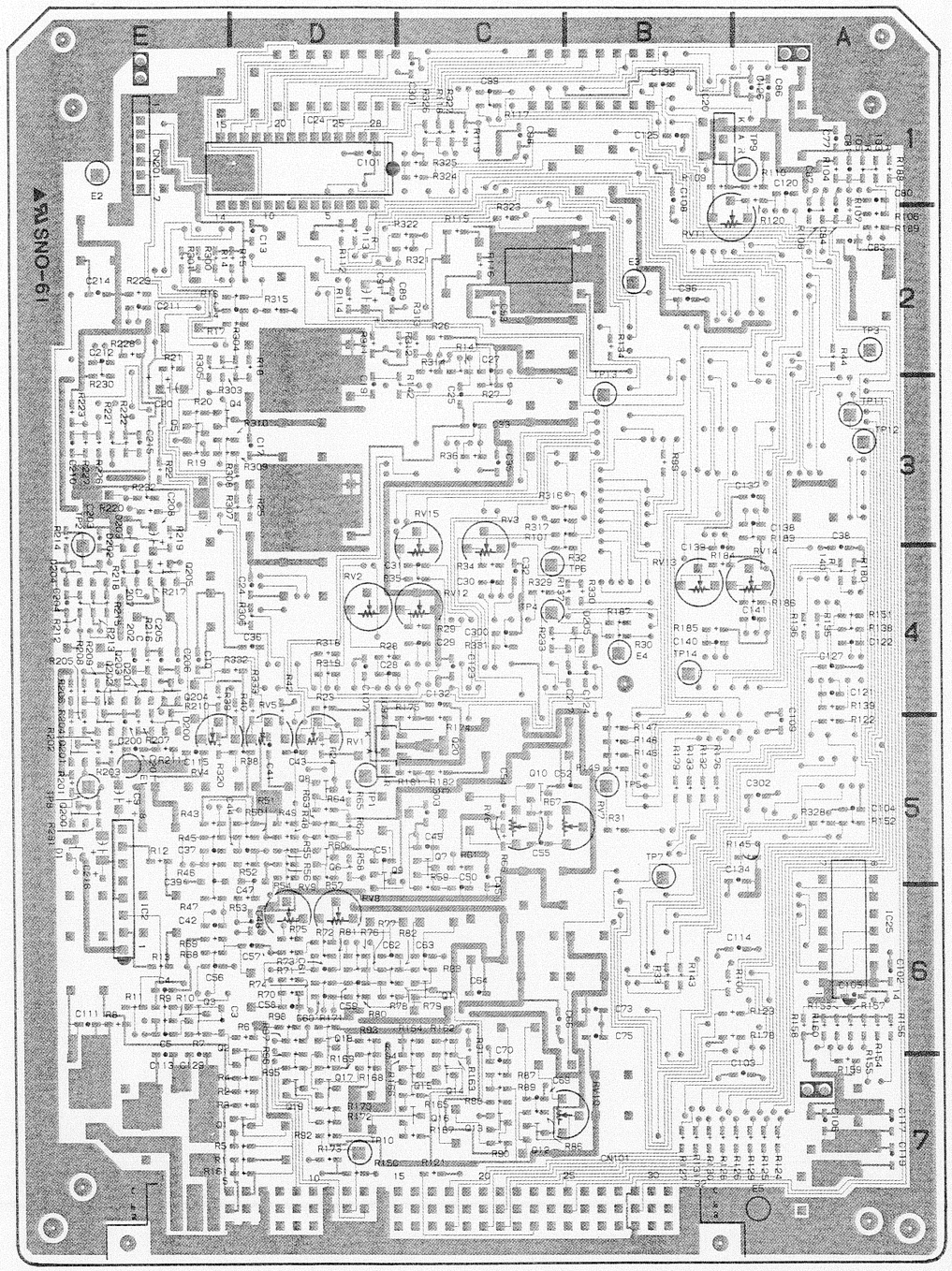

TBC-9PC 1-622-550-13 SOLDER SIDE

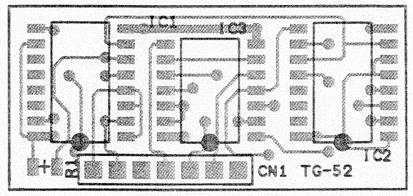

TG-52 1-635-406-11 A SIDE

A Side is the same as Component Side.

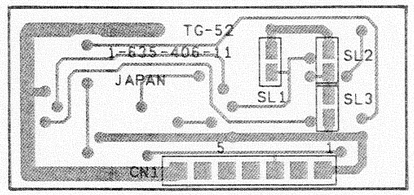

TG-52 1-635-406-11 B SIDE

B Side is the same as Solder Side.

EN-48P(1/3); C ENCODER

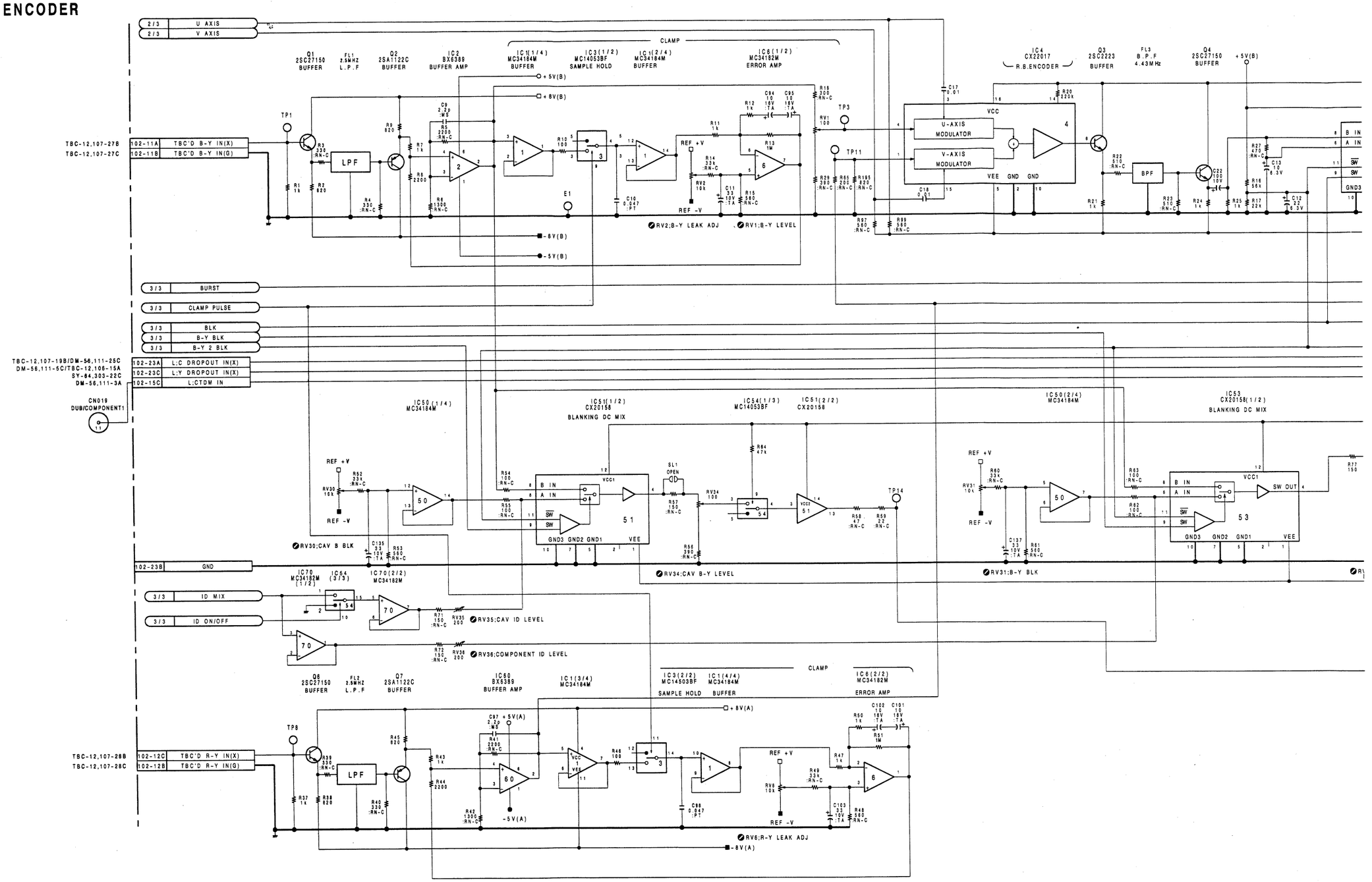

EN-48P(1/3)

EN-48P BOARD (1/3)

BOARD NO.1-622-546-15

BVW-85P(EK) ;#10001-

EN-48P(2/3); SC GENERATOR

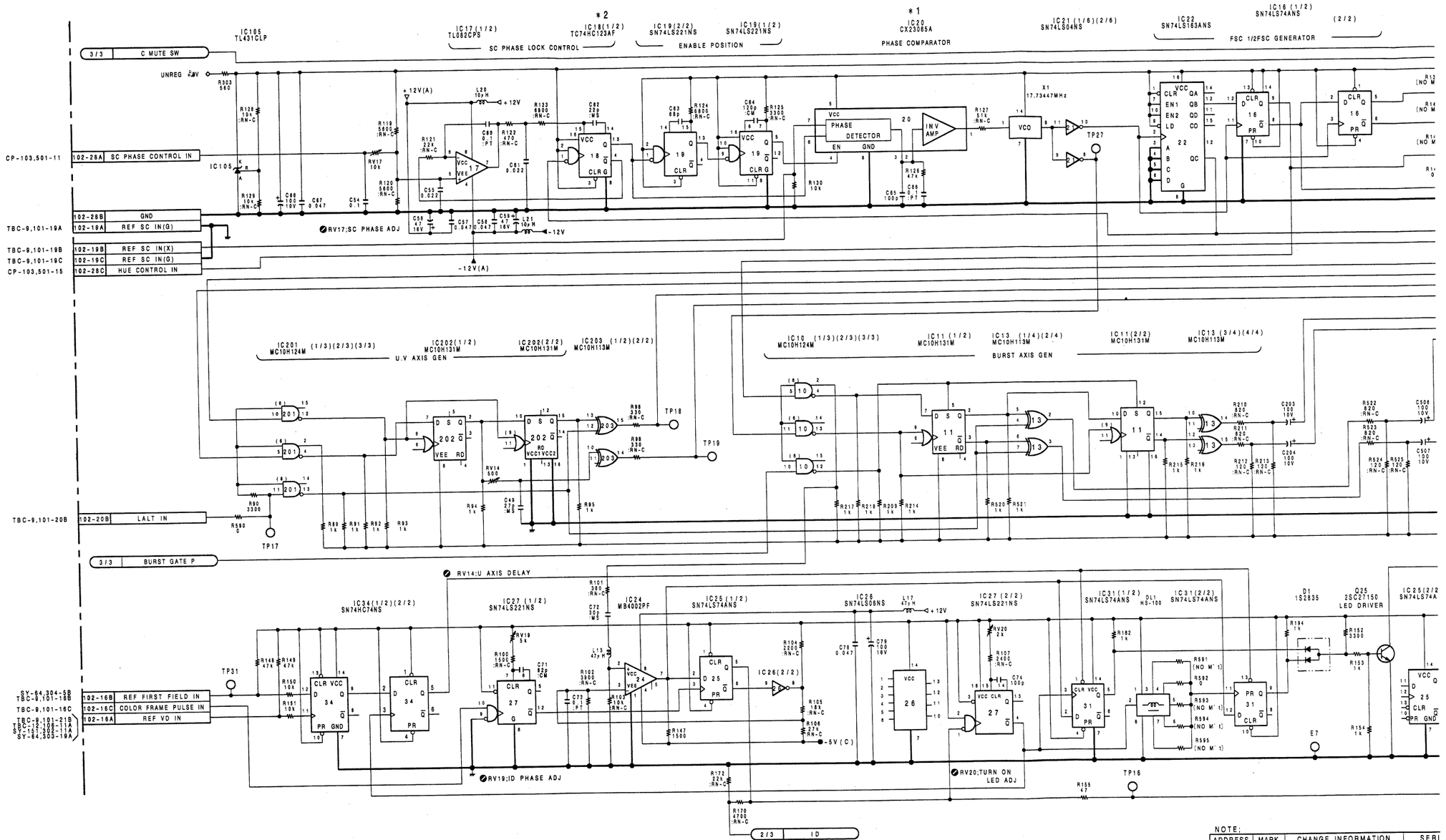

NOTE;

ADDRESS	MARK	CHANGE INFORMATION	SERI
F1,L1	*1	IC TYPE CHANGE IC20,204; CX23065 TO CX23065A	#1007
E1,J1,J4	*2	IC TYPE CHANGE IC18,701; TC74HC123F TO TC74HC123AF	#1010

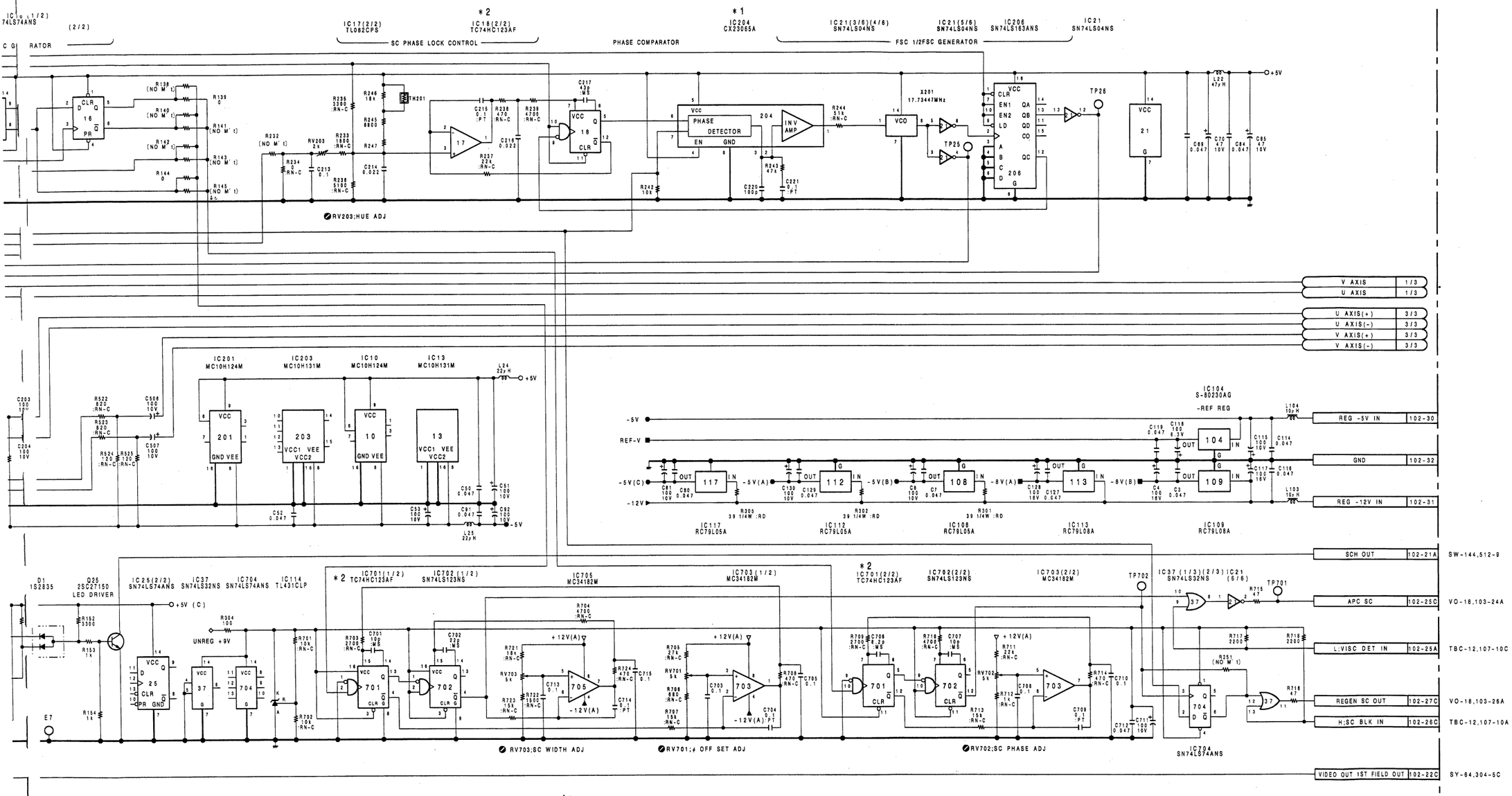

CHANGE INFORMATION	SERIAL NO.
IC TYPE CHANGE IC204; X23065 TO CX23065A	#10074-
IC TYPE CHANGE IC18,701; TC74HC123F TO TC74HC123AF	#10109-

EN-48P BOARD (2/3)

BOARD NO.1-622-546-15

BVW-85P(EK) ;#10001-

EN-48P(3/3); C BLK/BURST GENERATOR

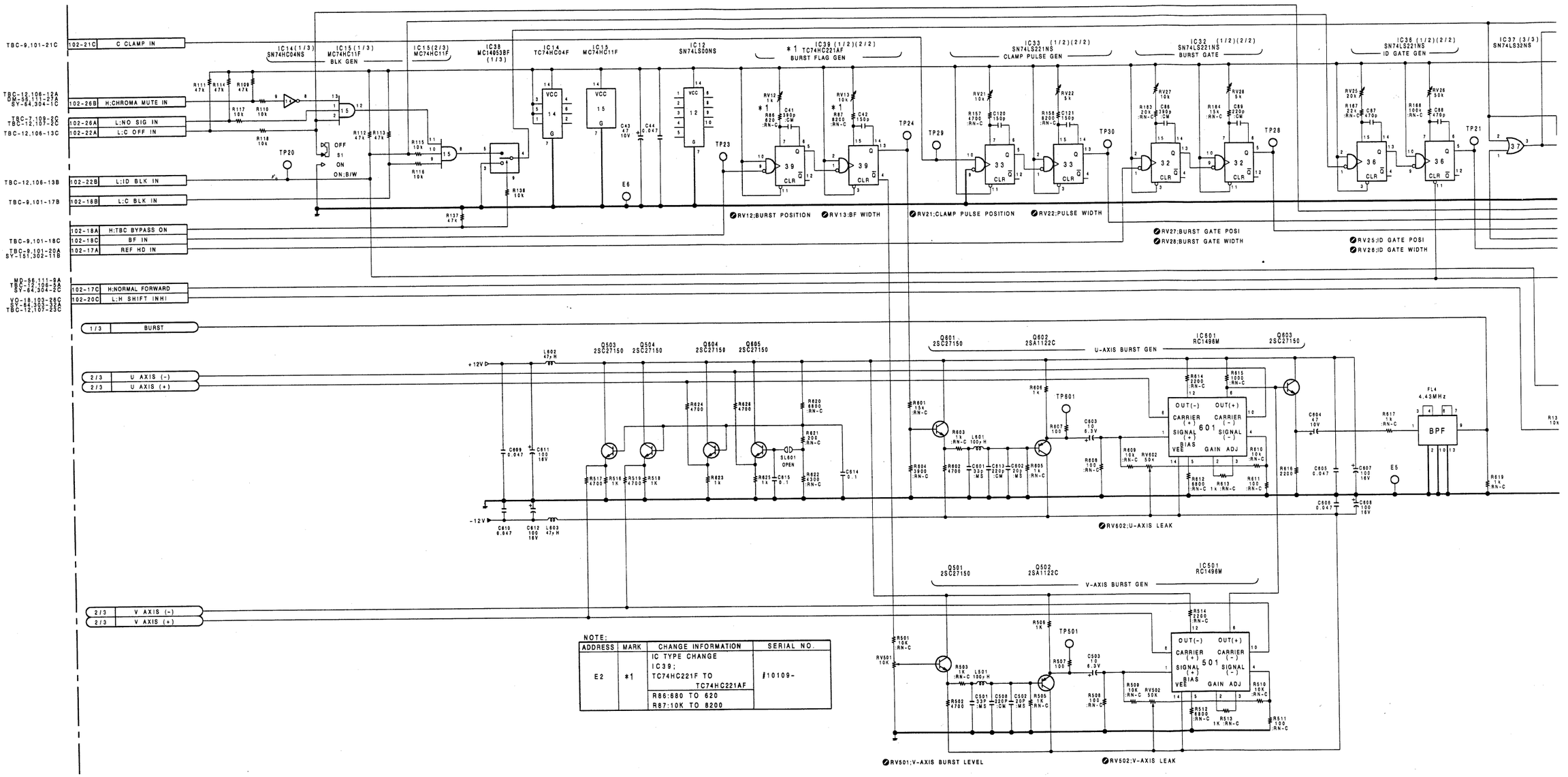

NOTE:

ADDRESS	MARK	CHANGE INFORMATION	SERIAL NO.
E2	*1	IC TYPE CHANGE IC39; TC74HC221F TO TC74HC221AF	#10109-
		R86:680 TO 620 R87:10K TO 8200	

17-291 17-292

A B C D E F G H

EN-48P(3/3)

IC12 SN74LS00NS

IC39 (1/2)(2/2) * 1 TC74HC221AF BURST FLAG GEN

IC33 (1/2)(2/2) SN74LS221NS CLAMP PULSE GEN

IC32 (1/2)(2/2) SN74LS221NS BURST GATE

IC36 (1/2)(2/2) SN74LS221NS ID GATE GEN

IC37 (3/3) SN74LS32NS

IC38(2/3) MC14053BF

IC39(2/2) SN74LS221NS

IC33(2/2) SN74LS221NS

IC32(2/2) SN74LS221NS

IC36(2/2) TC74HC221F

+5V

TP23 TP24 TP29 TP30 TP28 TP21

RV12:BURST POSITION RV13:BF WIDTH

RV21:CLAMP PULSE POSITION RV22:PULSE WIDTH

RV27:BURST GATE POSI
RV28:BURST GATE WIDTH

RV25:ID GATE POSI
RV26:ID GATE WIDTH

S2 ID SW

B-Y 2 BLK 1/3
BLK 1/3
B-Y BLK 1/3

C MUTE SW 2/3
CLAMP PULSE 1/3
BURST GATE P 2/3
ID ON/OFF 1/3

ID MIX 1/3

ID 2/3

Q501 2SC27150 Q602 2SA1122C U-AXIS BURST GEN IC601 RC1496M Q603 2SC27150

Q604 2SC27150 Q605 2SC27150

TP601

FL4 4.43MHz BPF

IC14 (2/3)(3/3) IC15(3/3)

IC12 SN74LS00NS IC38 MC14053BF (3/3) IC35 TL082CPS IC38 MC14053BF (1/3)

IC35 MC34182M

-5V

RV602;U-AXIS LEAK

Q501 2SC27150 Q502 2SA1122C IC501 RC1496M V-AXIS BURST GEN

TP501

RV501;V-AXIS BURST LEVEL

RV502;V-AXIS LEAK

CHANGE INFORMATION	SERIAL NO.
IC TYPE CHANGE IC39; TC74HC221F TO TC74HC221AF R :680 TO 620 R :10K TO 8200	#10109-

EN-48P BOARD **(3/3)**

BOARD NO.1-622-546-15

BVW-85P(EK) ;#10001-

EN-48P(1-622-546-15)

BVW-85P

CN102	G-3	IC103	G-4	RV13	D-2	TP601	B-2
		IC104	A-3	RV14	E-4	TP701	F-2
DL1	B-1	IC105	E-2	RV17	D-1	TP702	F-2
		IC106	G-4	RV19	C-2		
*D1	B-1	IC107	D-4	RV20	C-2	X1	F-1
		IC108	G-3	RV21	D-2	X201	E-2
E1	A-5	IC109	D-5	RV22	D-1		
E2	D-5	IC110	G-5	RV25	D-2		
E3	E-6	IC111	D-6	RV26	D-2		
E5	B-3	IC112	G-4	RV27	D-1		
E6	G-2	IC113	D-6	RV28	D-2		
E7	C-1	IC114	F-2	RV30	A-4		
		IC115	C-4	RV31	A-4		
FL1	B-4	IC116	A-1	RV33	E-4		
FL2	A-5	IC117	A-2	RV34	E-5		
FL3	D-4	IC201	F-3	RV35	F-5		
FL4	B-3	IC202	E-3	RV36	F-5		
		IC203	E-3	RV40	A-4		
IC1	C-5	IC204	E-2	RV41	F-5		
IC2	C-5	IC206	F-3	RV42	G-5		
IC3	D-5	IC501	A-3	RV203	A-2		
IC4	E-4	IC601	A-2	RV350	B-4		
IC5	B-4	IC701	G-2	RV501	B-3		
IC6	C-5	IC702	G-2	RV502	A-3		
IC10	E-3	IC703	G-1	RV602	A-3		
IC11	E-3	IC704	G-2	RV701	G-1		
IC12	D-2	IC705	G-1	RV702	G-1		
IC13	D-3			RV703	G-1		
IC14	E-3	*Q1	B-5				
IC15	E-2	*Q2	B-5	S1	A-3		
IC16	F-1	*Q3	D-4	S2	A-2		
IC17	D-1	*Q4	C-4				
IC18	E-1	*Q6	B-5	TH201	D-2		
IC19	E-1	*Q7	B-5				
IC20	F-1	*Q8	C-4	TP1	A-4		
IC21	F-2	*Q9	B-4	TP3	E-5		
IC22	F-1	*Q10	C-4	TP5	C-4		
IC24	B-2	*Q11	B-4	TP6	B-4		
IC25	B-2	*Q13	E-4	TP7	A-4		
IC26	B-2	*Q14	F-4	TP8	A-5		
IC27	B-1	*Q15	B-4	TP11	E-5		
IC31	B-1	*Q16	B-5	TP12	F-4		
IC32	C-1	*Q17	B-5	TP13	F-5		
IC33	D-1	*Q18	A-4	TP14	F-5		
IC34	B-1	*Q25	C-1	TP15	F-6		
IC35	D-3	*Q501	B-3	TP16	A-1		
IC36	D-2	*Q502	A-3	TP17	F-3		
IC37	F-3	*Q503	C-3	TP18	E-4		
IC38	D-3	*Q504	C-4	TP19	D-4		
IC39	C-1	*Q601	B-2	TP20	E-2		
IC50	E-5	*Q602	A-2	TP21	D-2		
IC51	E-5	*Q603	A-3	TP23	C-2		
IC53	E-4	*Q604	C-3	TP24	C-3		
IC54	F-4	*Q605	C-3	TP25	F-2		
IC56	F-4			TP26	F-2		
IC60	C-5	RV1	E-5	TP27	F-3		
IC70	F-5	RV2	A-5	TP28	C-1		
IC71	E-5	RV4	B-4	TP29	C-1		
IC72	F-5	RV6	A-5	TP30	D-1		
IC101	C-3	RV7	B-3	TP31	F-3		
IC102	D-4	RV12	D-2	TP501	B-3		

* : SOLDERING SIDE

EN-48P; C ENCODER

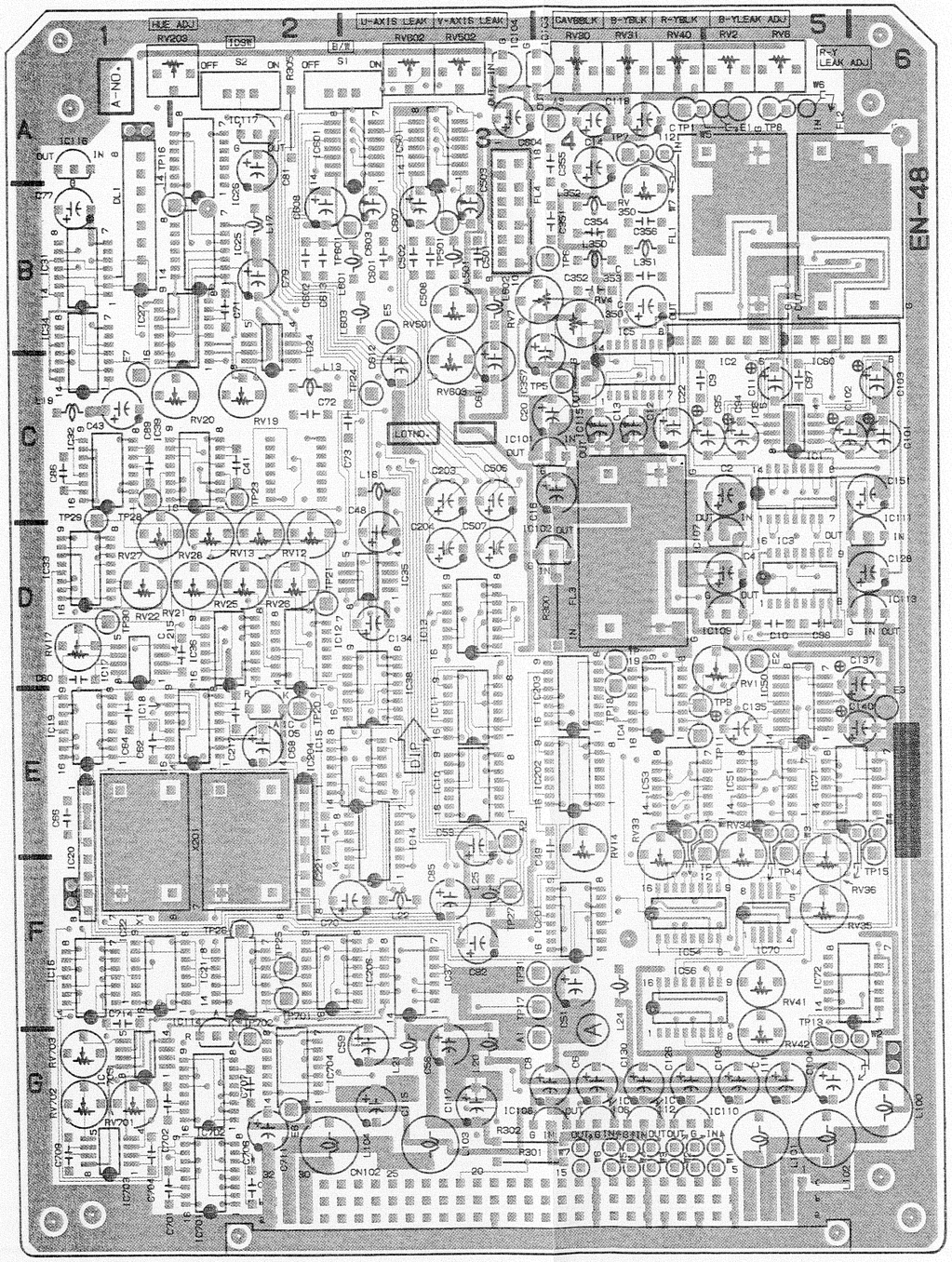

EN-48P 1-622-546-15 A SIDE

A Side is the same as Component Side.

EN-48P; C ENCODER

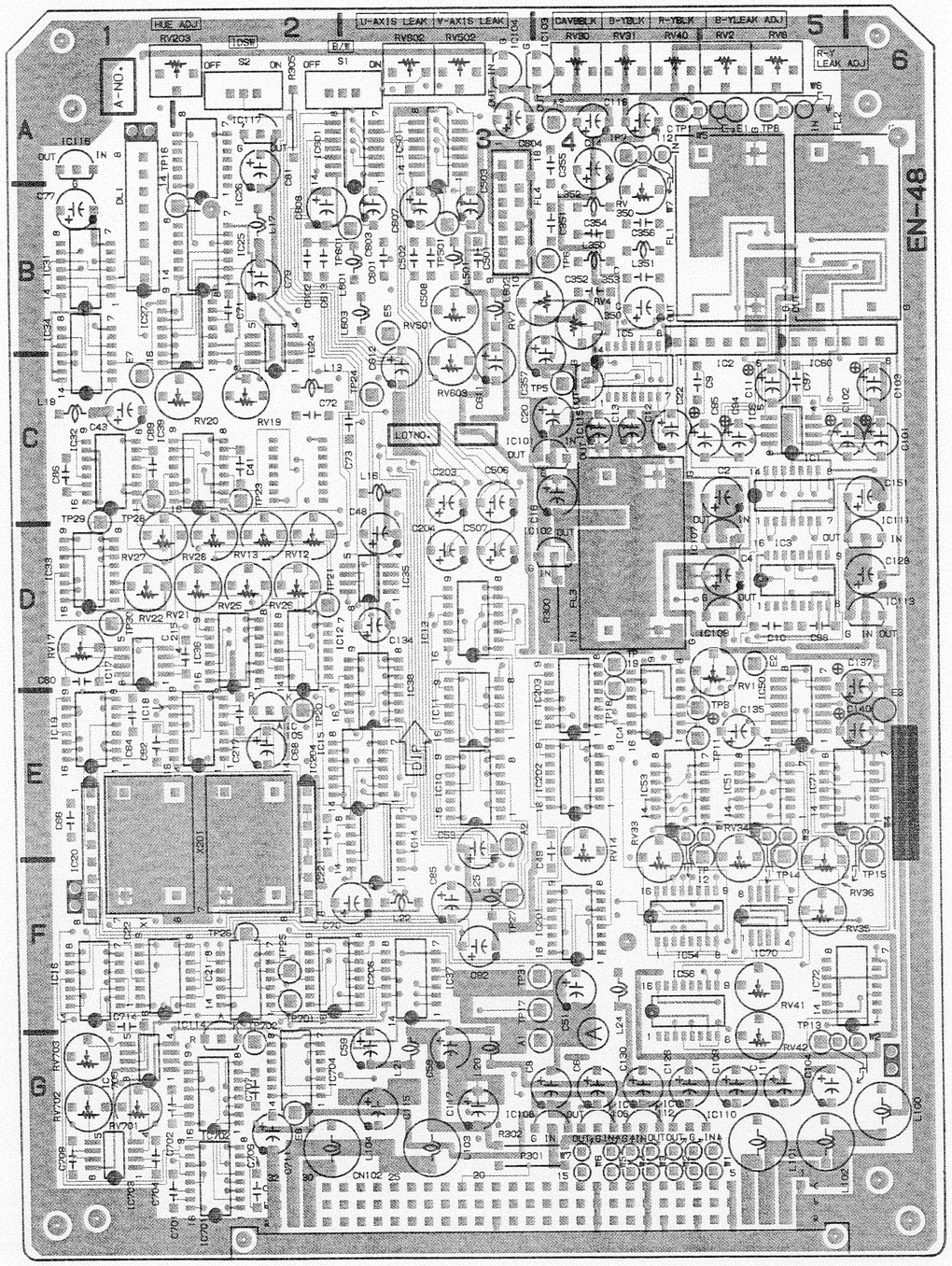

VO-18P(1/3); VIDEO OUTPUT

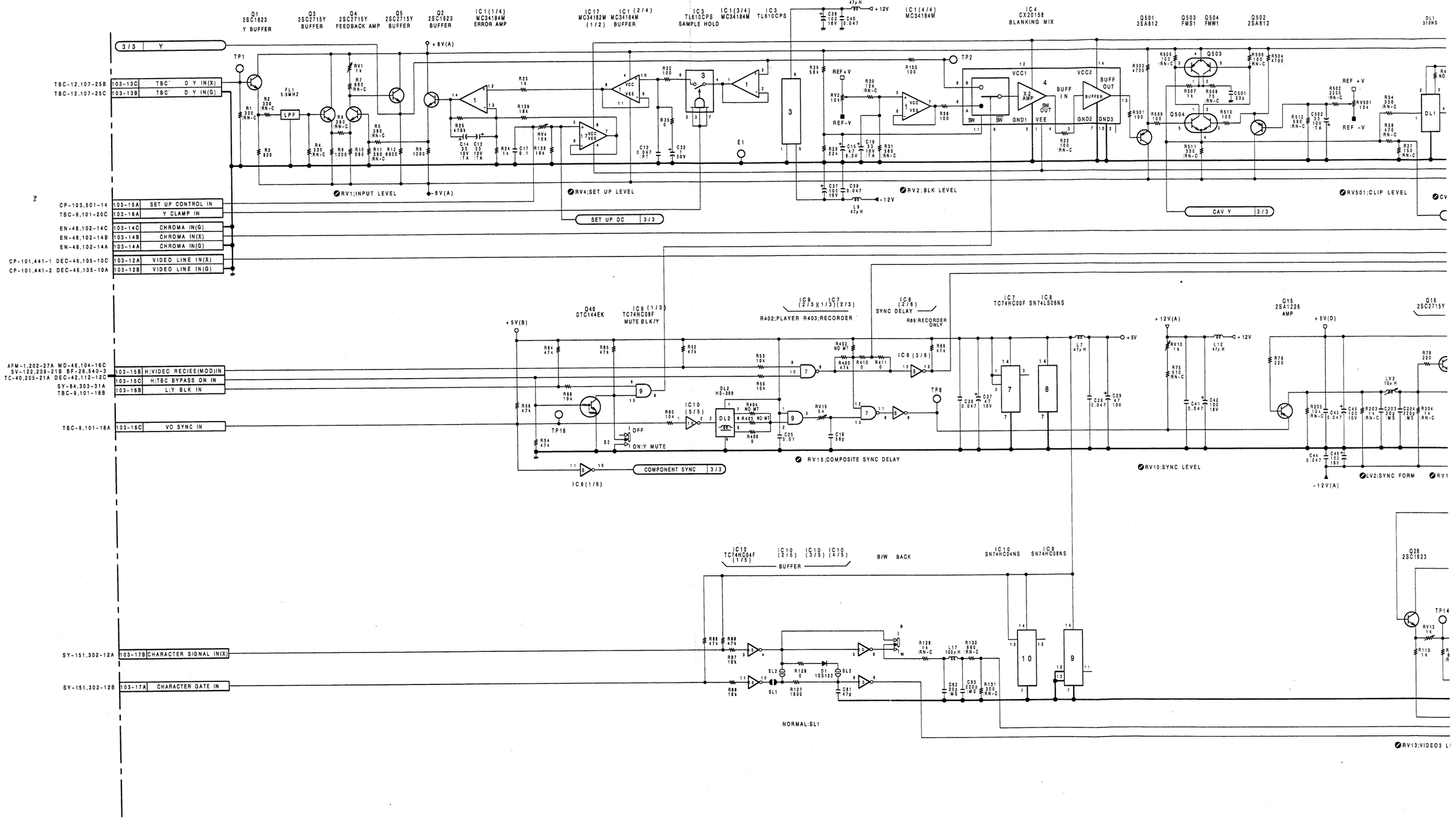

17-307 17-308

A B C D E F G H

VO-18P(1/3)

NOTE;

ADDRESS	MARK	CHANGE INFORMATION	SERIAL NO.
L2	*1	R142;1K TO 10K	#10074-

VO-18P BOARD (1/3)

BOARD NO.1-622-547-16

BVW-85P(EK) ;#10001-

VO-18P(2/3); AGC FOR AFM
VO-18P(3/3); SCH DETECTOR
DUS-270; SQUELCH BUFFER

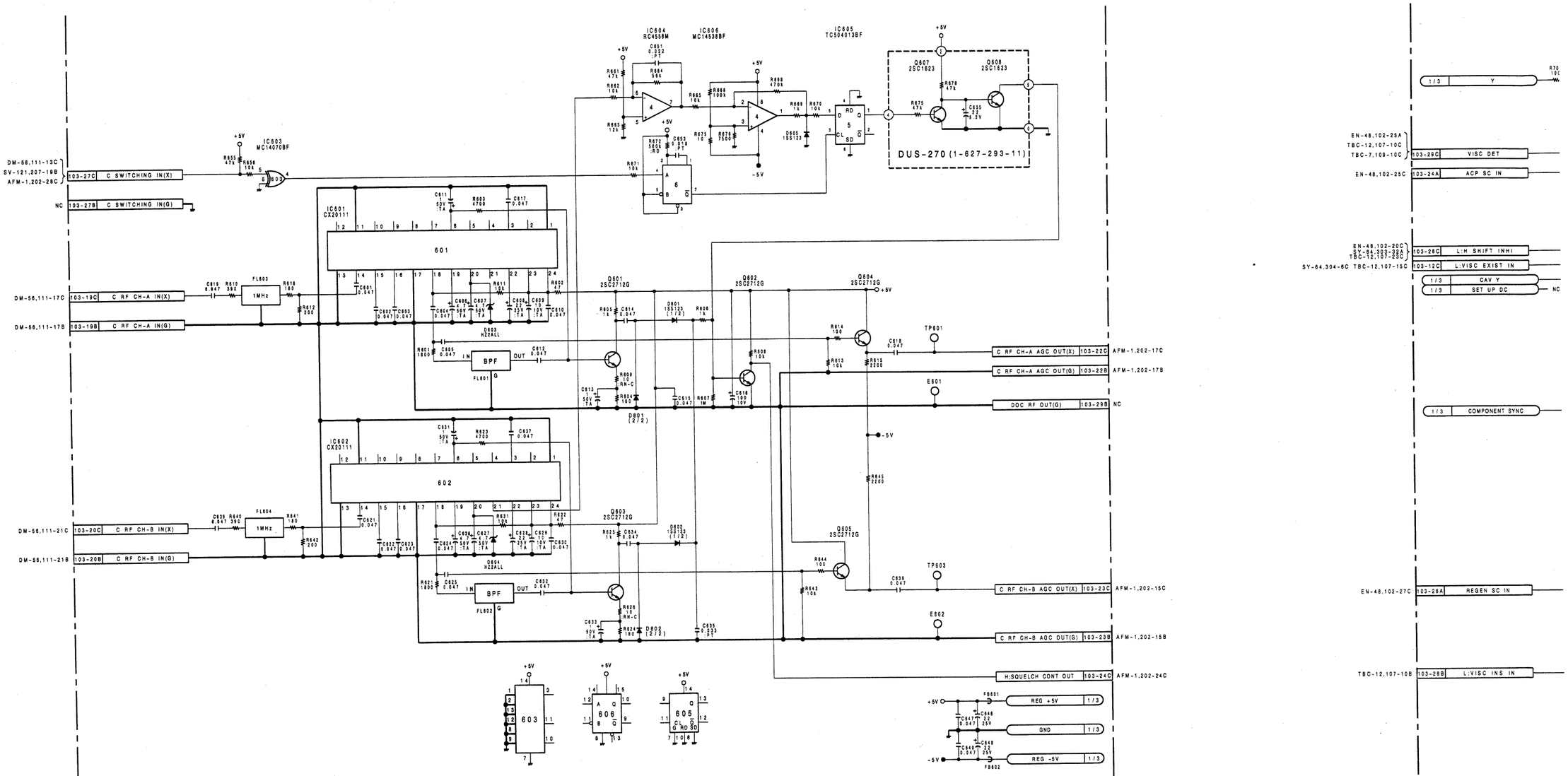

VO-18P BOARD (2/3)

BOARD NO.1-622-547-16
BVW-85P(EK) ;#10001-

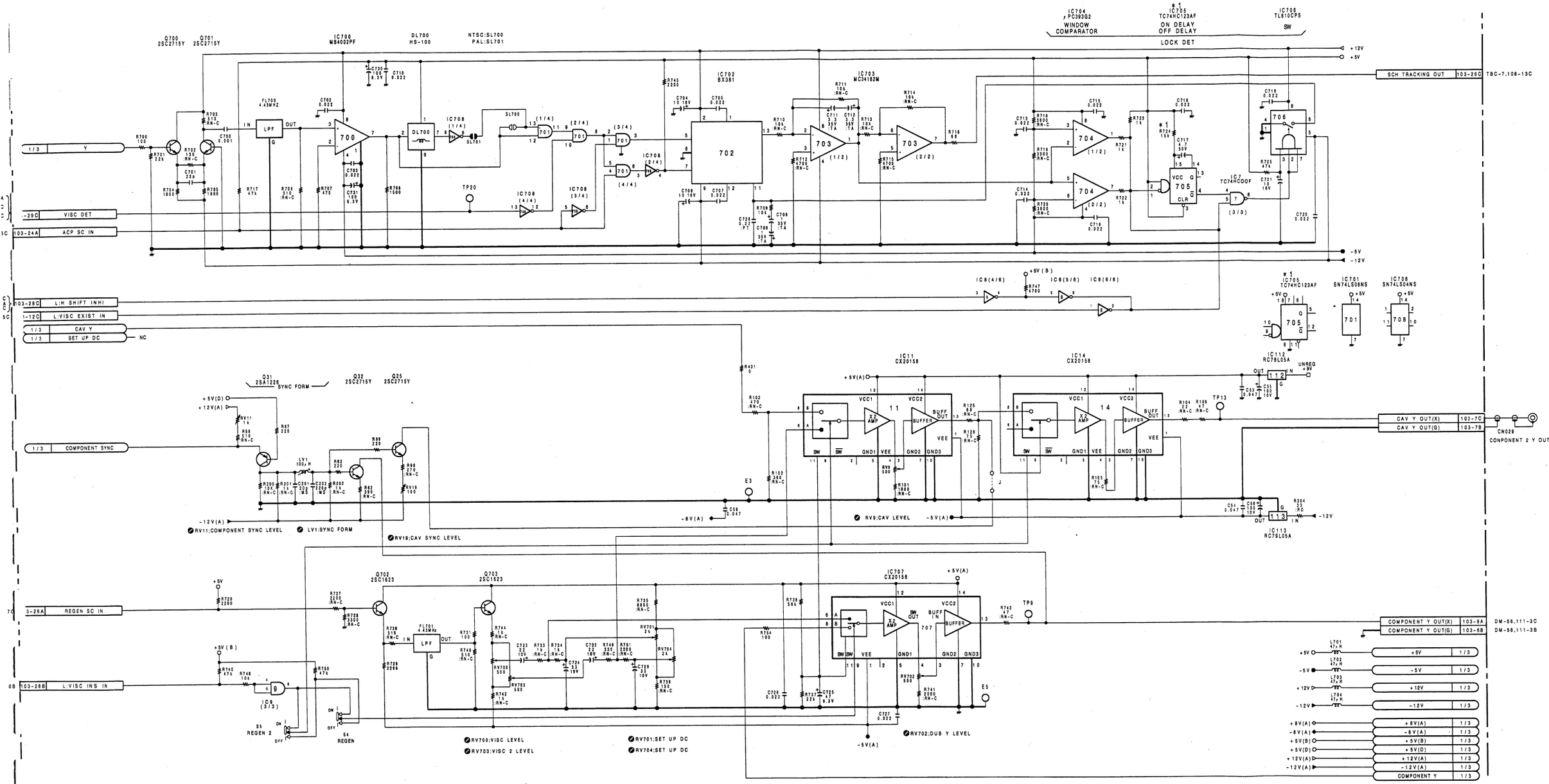

NOTE;

ADDRESS	MARK	CHANGE INFORMATION	SERIAL NO.
N1,N2	*1	IC TYPE CHANGE IC705:TC74HC123F TO TC74HC123AF	#10109-
		R724:33k TO 15k	

VO-18P BOARD (3/3)

BOARD NO.1-622-547-16

BVW-85P(EK) ;#10001-

VO-18P(1-622-547-16)
BVW-85P

CN103	J-6	IC100	D-6	*Q19	G-5	RV702	C-3
		IC101	D-7	*Q20	F-5	RV703	A-3
CV1	D-6	IC102	D-6	*Q25	A-4	RV704	B-3
		IC103	D-6	*Q27	G-5		
DL1	B-5	IC104	H-7	*Q28	G-5	S1	E-4
DL2	D-4	IC105	G-6	*Q29	G-4	S2	A-4
DL700	C-2	IC106	H-5	*Q30	F-4	S3	A-3
		IC107	H-5	*Q31	E-4	S4	A-2
*D1	E-3	IC108	A-4	*Q32	D-4	S5	A-2
*D601	H-2	IC109	F-7	*Q35	E-7		
*D602	H-3	IC110	F-7	*Q36	E-6	TP1	A-5
D603	G-2	IC111	A-4	*Q37	E-6	TP2	C-6
D604	G-3	IC112	C-4	*Q38	F-6	TP4	E-5
*D605	F-3	IC113	C-4	*Q39	E-7	TP5	F-6
		IC601	G-1	*Q40	C-3	TP6	G-6
E1	A-5	IC602	G-2	*Q501	C-5	TP7	G-7
E2	H-6	IC603	F-1	*Q502	C-5	TP8	C-4
E3	E-3	IC604	F-3	*Q503	C-5	TP9	C-3
E4	H-4	IC605	F-2	*Q504	C-5	TP10	E-6
E5	B-3	IC606	F-2	*Q601	H-2	TP11	F-5
E601	F-3	IC700	B-1	*Q602	J-2	TP13	B-4
E602	H-4	IC701	C-1	*Q603	H-3	TP14	G-5
		IC702	C-1	*Q604	H-1	TP16	G-6
FB601	J-3	IC703	D-2	*Q605	J-2	TP17	G-5
FB602	J-3	IC704	D-1	*Q700	A-1	TP18	E-3
		IC705	E-1	*Q701	A-1	TP19	E-7
FL1	B-7	IC706	E-2	*Q702	B-2	TP20	J-3
FL601	H-1	IC707	B-3	*Q703	A-2	TP601	H-1
FL602	H-3	IC708	C-1			TP603	H-2
FL603	F-2			RV1	B-7	TP23	B-5
FL604	F-3	LV1	E-4	RV2	A-5	TP25	A-4
FL700	B-1	LV2	F-5	RV4	B-6	TP26	B-3
FL701	A-2			RV5	E-6	TP32	F-3
		*Q1	A-5	RV7	F-6	TP33	F-4
IC1	C-6	*Q2	B-6	RV9	A-4	TP34	C-2
IC3	C-6	*Q3	A-6	RV10	D-5	TP35	C-3
IC4	C-6	*Q4	B-7	RV11	E-4	TP36	C-5
IC5	F-6	*Q5	B-7	RV13	G-5	TP37	C-5
IC6	G-6	*Q6	D-5	RV14	A-7	TP38	B-4
IC7	D-3	*Q7	E-5	RV15	C-3		
IC8	C-3	*Q8	E-6	RV16	F-5	X1	D-1
IC9	D-3	*Q9	E-6	RV17	F-5	X2	D-1
IC10	E-3	*Q10	E-6	RV19	A-4	X3	E-3
IC11	B-4	*Q11	F-5	RV20	G-6	X4	E-3
IC12	G-5	*Q12	F-6	RV21	H-4		
IC13	G-4	*Q14	E-6	RV22	E-6		
IC14	B-4	*Q15	E-5	RV23	E-6		
IC15	G-4	*Q16	F-5	RV501	D-6		
IC16	E-7	*Q17	F-5	RV700	A-3		
IC17	C-6	*Q18	F-5	RV701	B-4		

* : SOLDERING SIDE

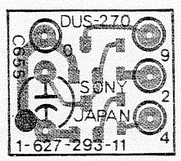

DUS-270 1-627-293-11 COMPONENT SIDE

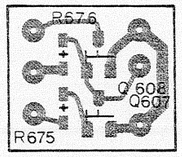

DUS-270 1-627-293-11 SOLDER SIDE

VO-18P; VIDEO OUTPUT
DUS-270; SQUELCH BUFFER

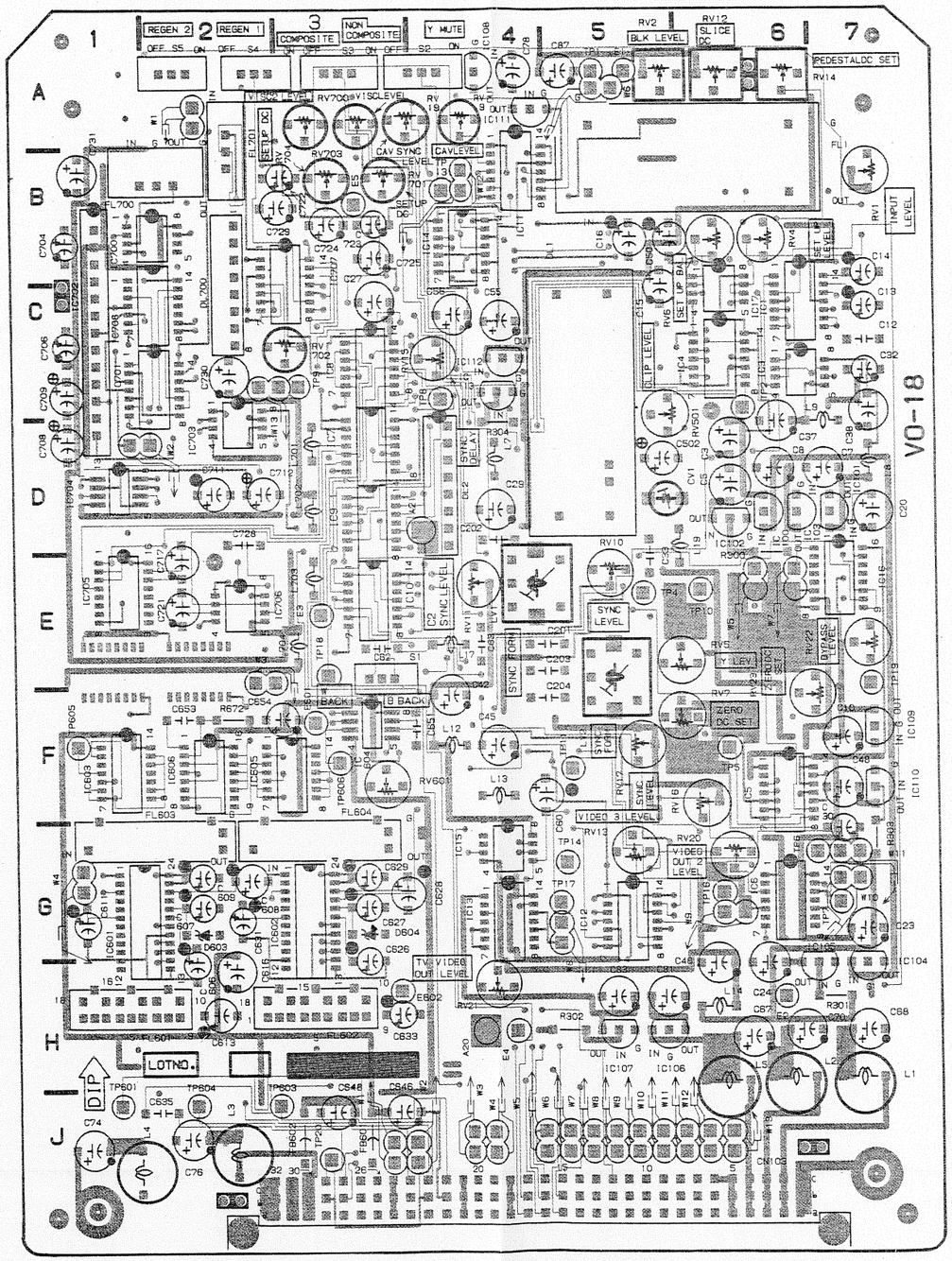

VO-18P 1-622-547-16 COMPONENT SIDE

VO-18P; VIDEO OUTPUT
DUS-270; SQUELCH BUFFER

C-3
A-3
B-3

E-4
A-4
A-3
A-2
A-2

A-5
C-6
E-5
F-6
G-6
G-7
C-4
C-3
E-6
F-5
B-4
G-5
G-6
G-5
E-3
E-7
J-3
H-1
H-2
B-5
A-4
B-3
F-3
F-4
C-2
C-3
C-5
C-5
B-4

D-1
D-1
E-3
E-3

RING SIDE

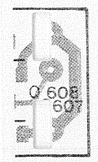

DER SIDE

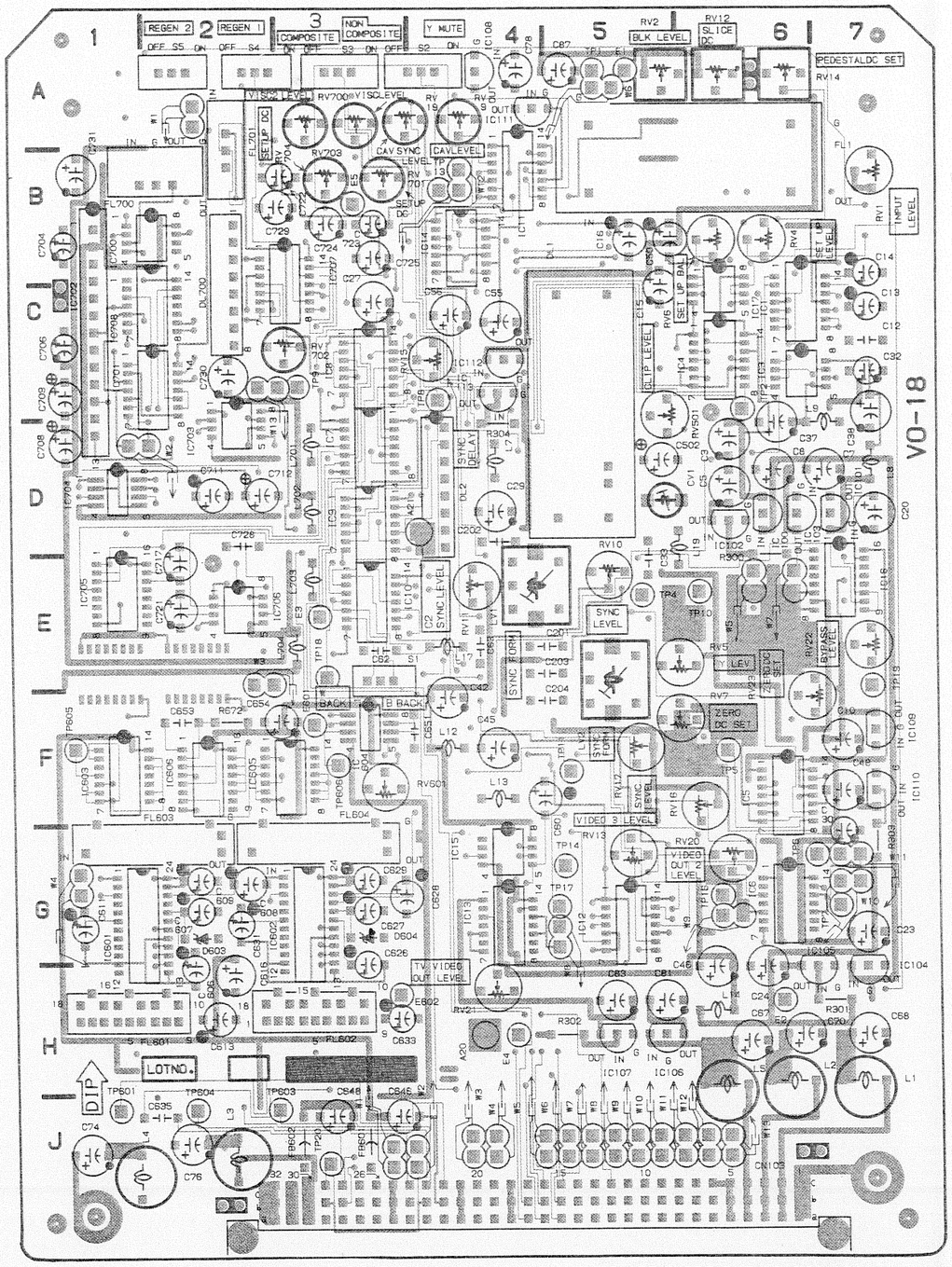

VO-18P 1-622-547-16 COMPONENT SIDE

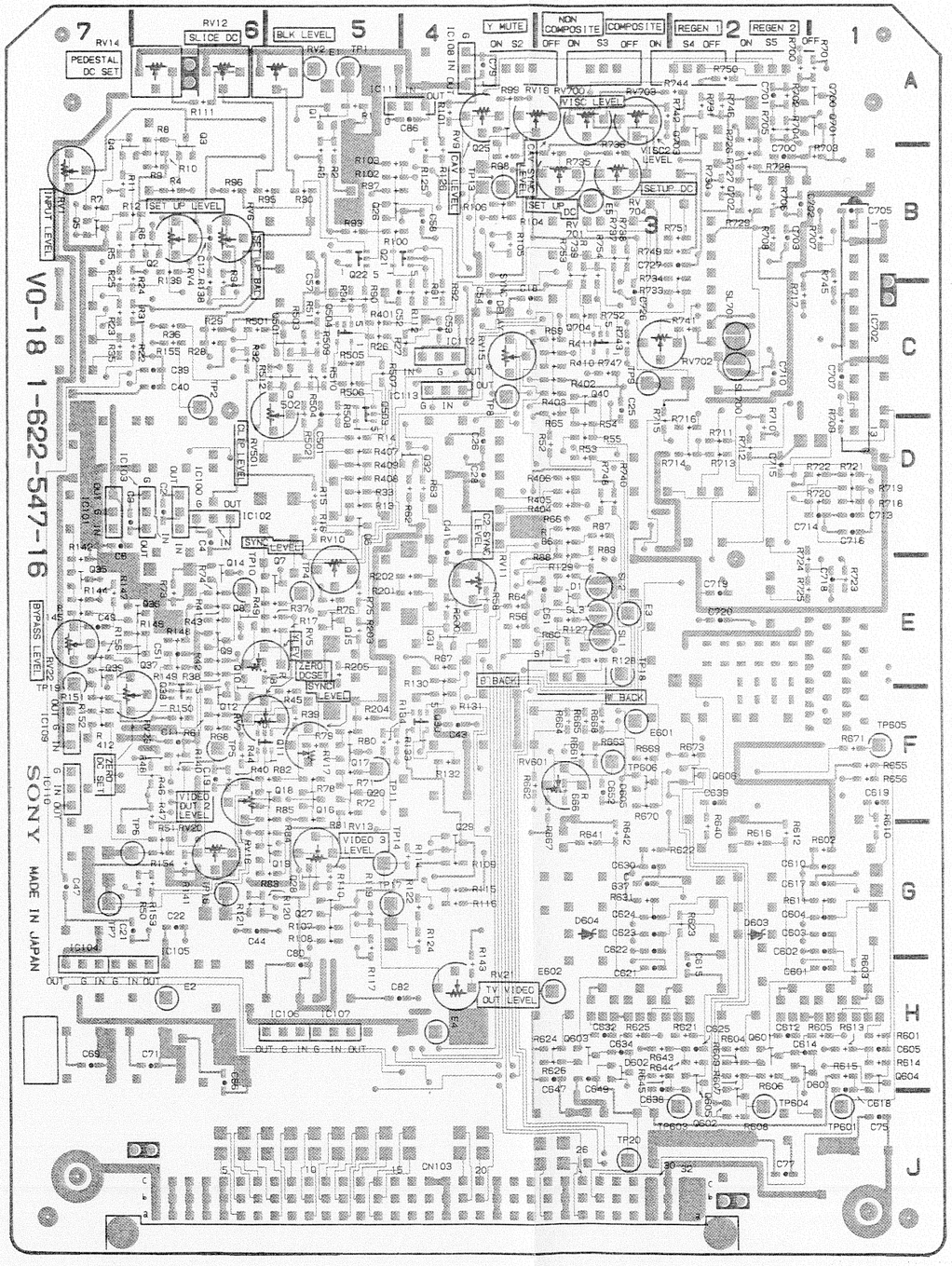

VO-18P 1-622-547-16 SOLDER SIDE

RE-69; ROTARY ERASE
CP-103P; SUB-CONTROL PANEL

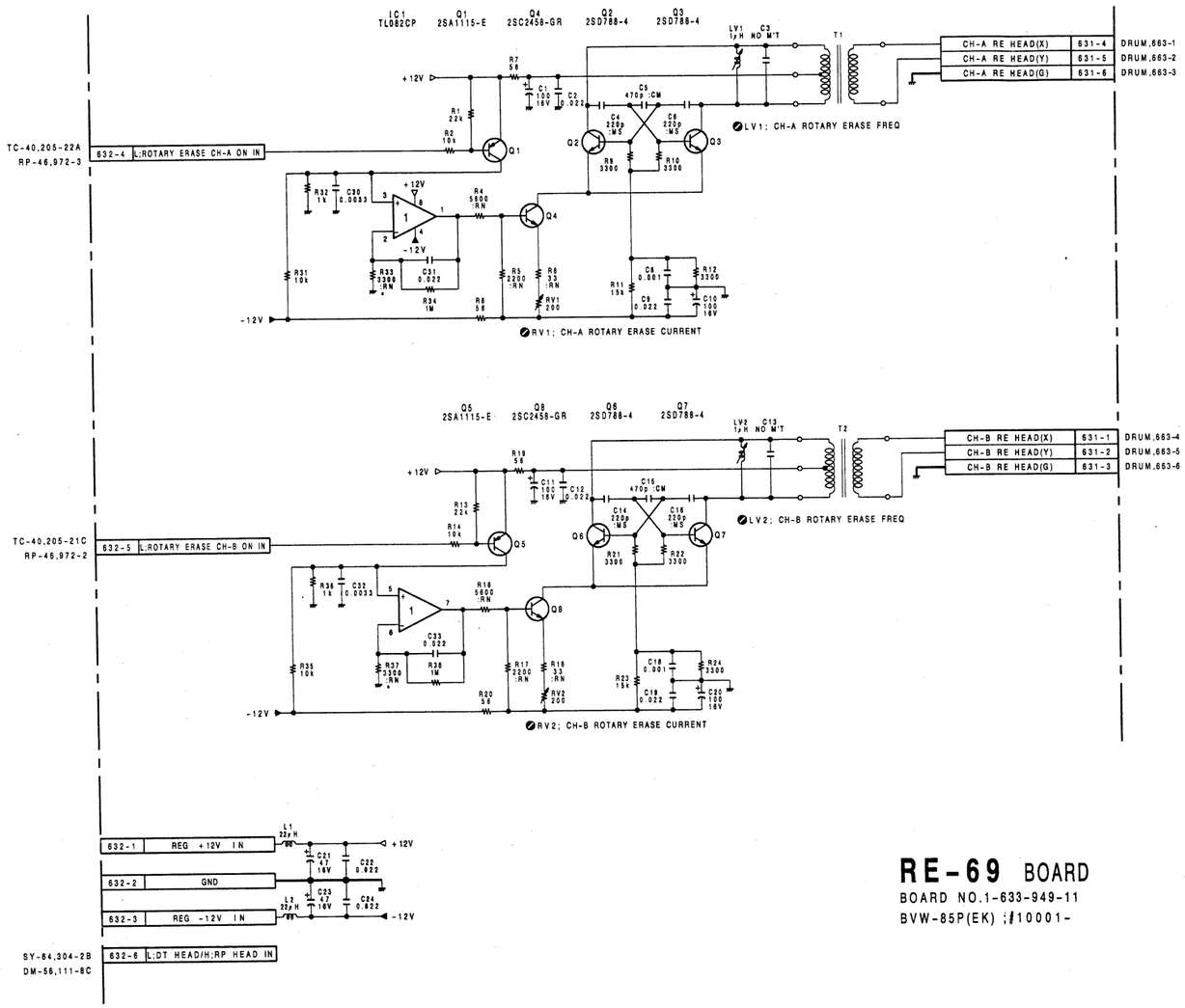

RE-69 BOARD

BOARD NO.1-633-949-11
BVW-85P(EK) ;#10001-

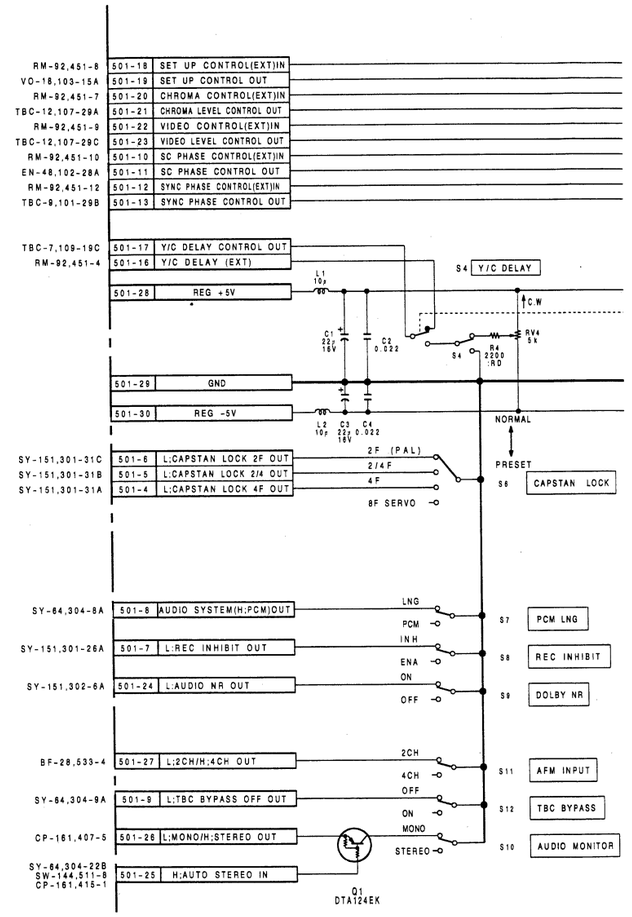

CH-A RE HEAD(X)	631-4	DRUM,663-1
CH-A RE HEAD(Y)	631-5	DRUM,663-2
CH-A RE HEAD(G)	631-6	DRUM,663-3

CH-B RE HEAD(X)	631-1	DRUM,663-4
CH-B RE HEAD(Y)	631-2	DRUM,663-5
CH-B RE HEAD(G)	631-3	DRUM,663-6

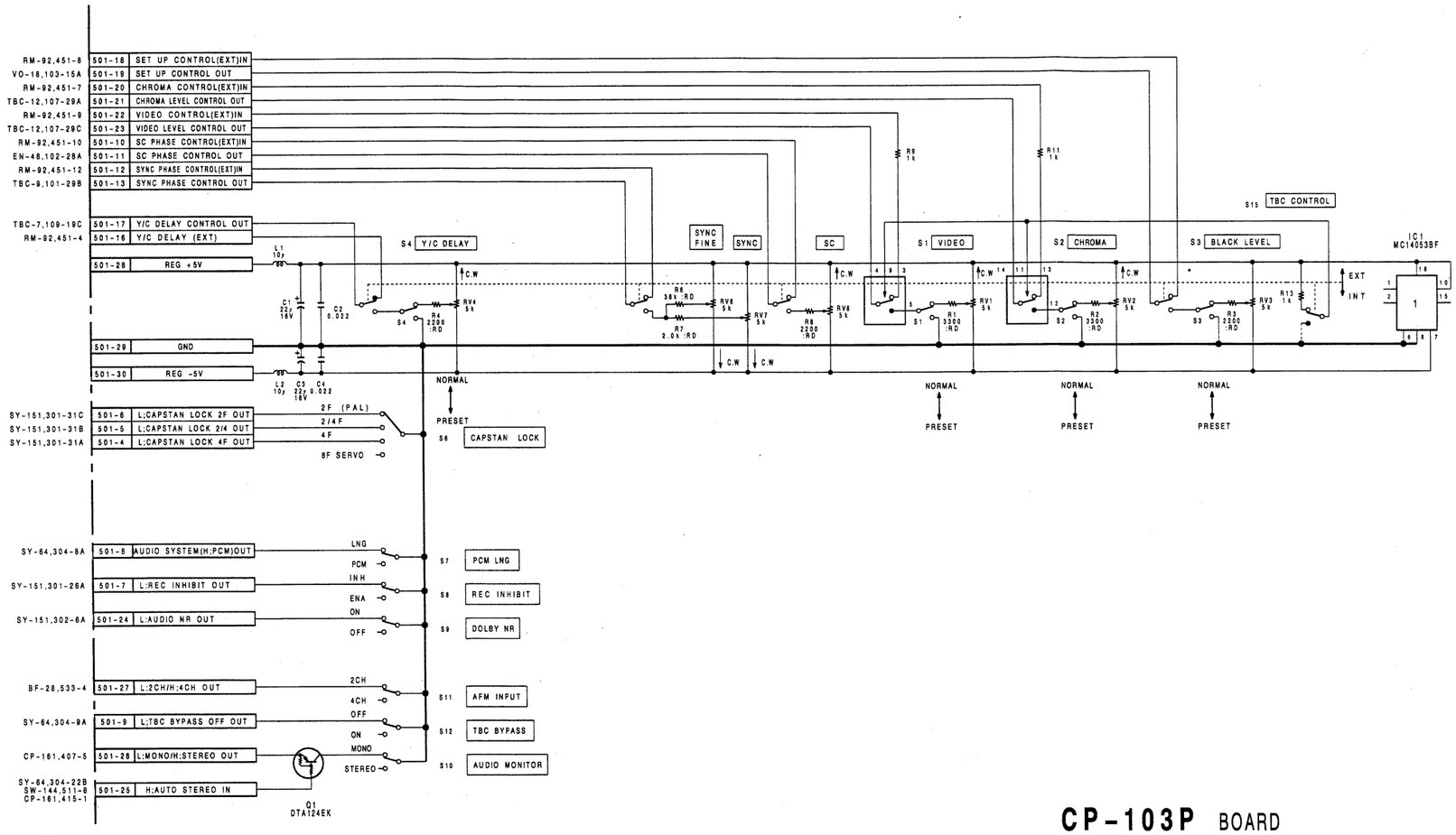

RE-69 BOARD

BOARD NO.1-633-949-11
BVW-85P(EK) ;#10001-

CP-103P BOARD

BOARD NO.1-622-566-12
BVW-85P(EK) ;#10001-

RE-69; ROTARY ERASE
CP-103P; SUB CONTROL PANEL

RE-69(1-633-949-11)
BVW-85P

CN1	B-2
CN2	B-1
IC1	A-1
LV1	B-1
LV2	B-1
Q1	B-1
Q2	A-2
Q3	A-2
Q4	A-1
Q5	B-1
Q6	A-2
Q7	A-2
Q8	A-1
RV1	B-1
RV2	A-1

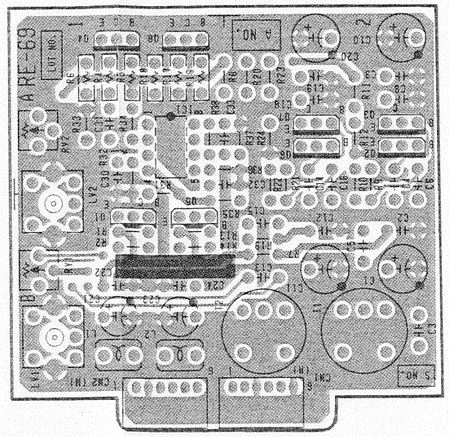

RE-69 1-633-949-11 A SIDE

A Side is the same as Component Side.

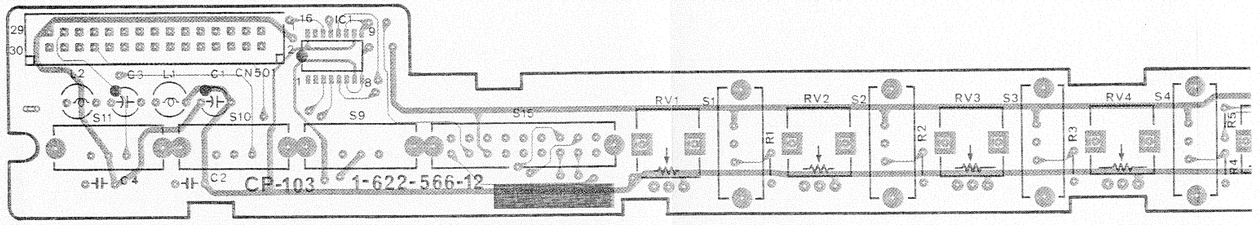

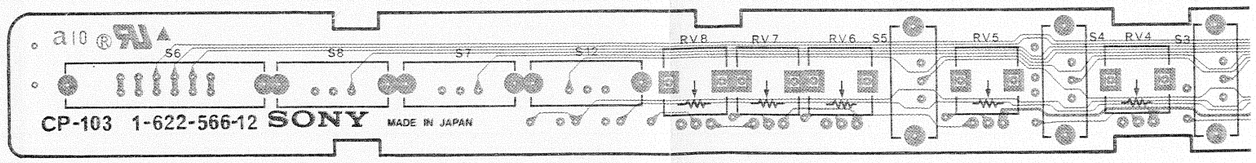

RE-69; ROTARY ERASE
CP-103P; SUB CONTROL PANEL

3-949-11)

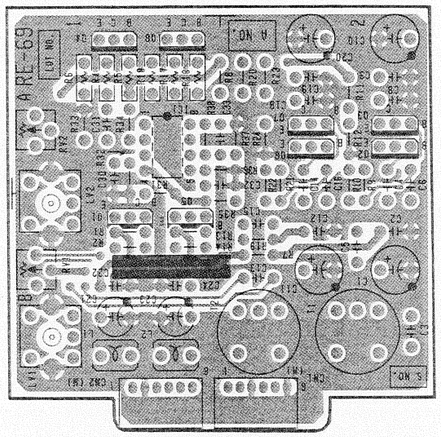

RE-69 1-633-949-11 A SIDE

A Side is the same as Component Side.

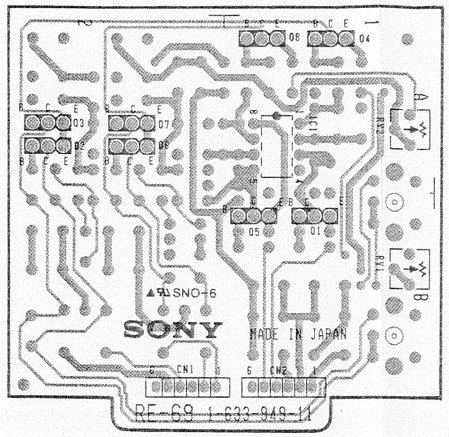

RE-69 1-633-949-11 B SIDE

B Side is the same as Solder Side.

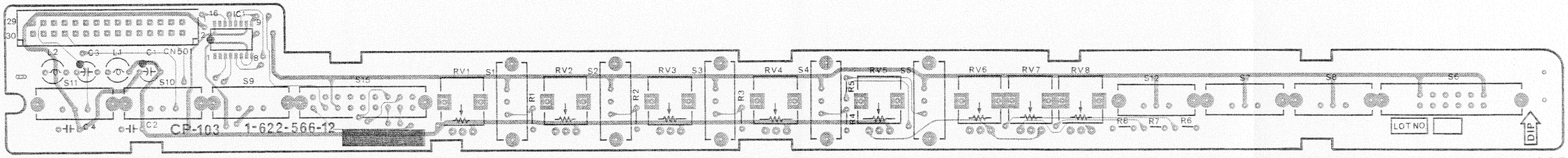

CP-103P 1-622-566-12 COMPONENT SIDE

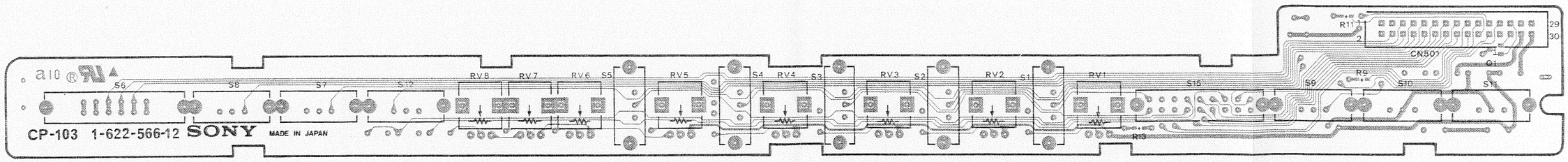

CP-103P 1-622-566-12 SOLDER SIDE

CP-101P(1/2); AUDIO INPUT
CP-101P(2/2); VIDEO INPUT

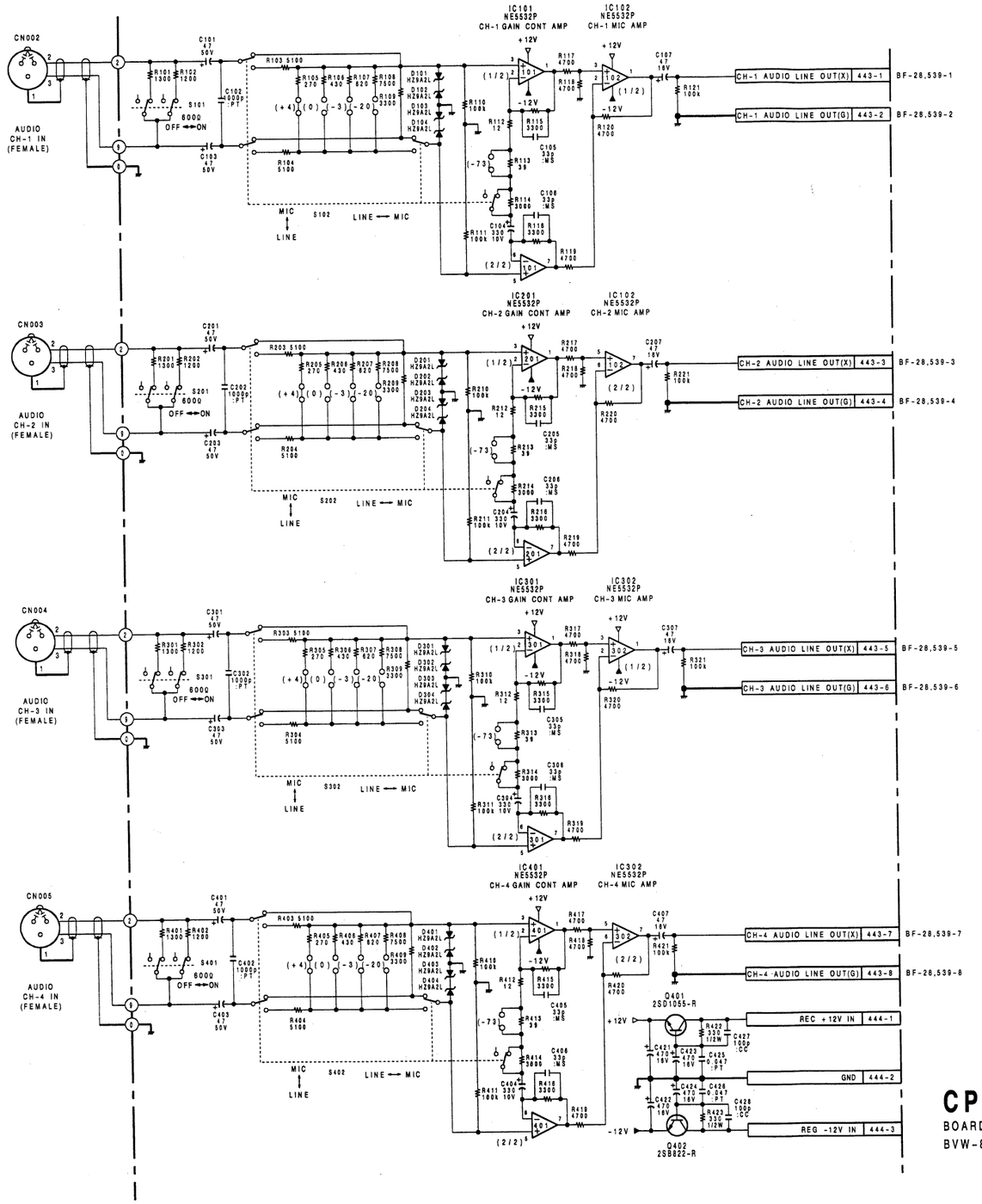

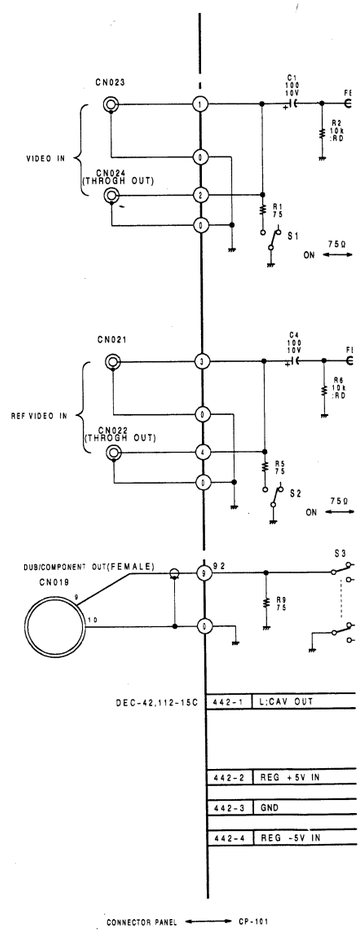

CP-101P BOARD **(1/2)**

BOARD NO.1-622-570-11

BVW-85P(EK) ;#10001-

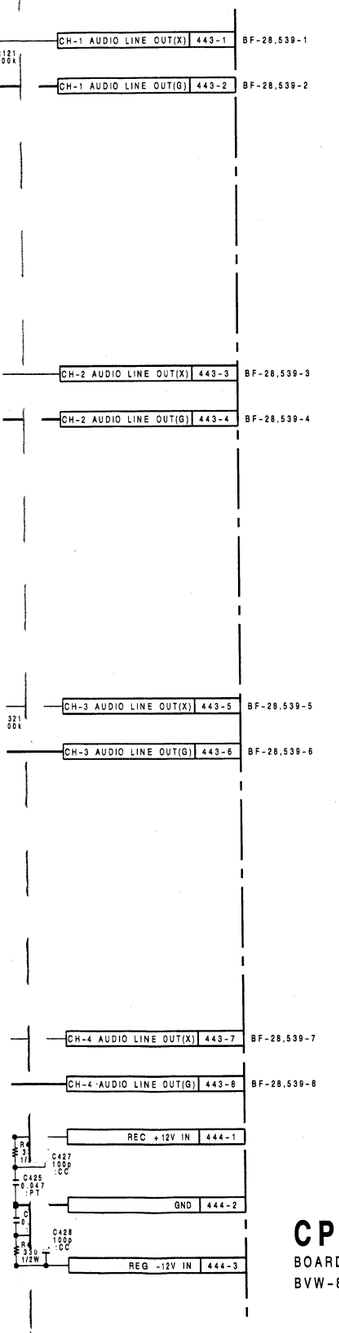

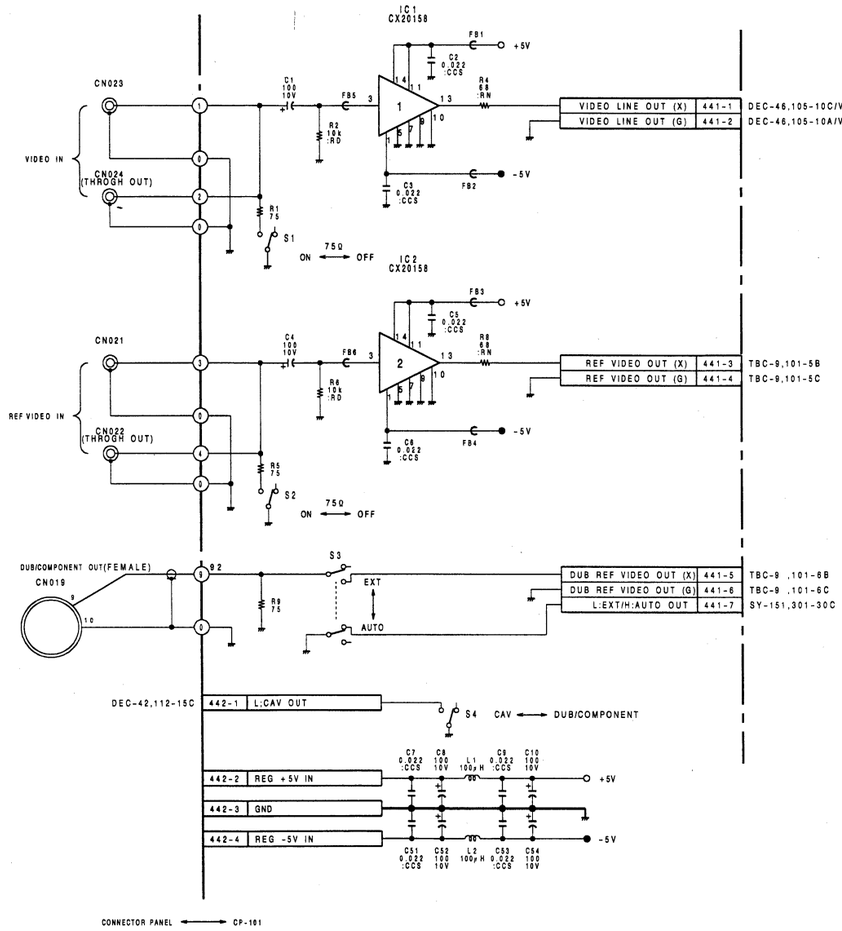

CP-101P BOARD (1/2)

BOARD NO.1-622-570-11
BVW-85P(EK) ;#10001-

CP-101P BOARD (2/2)

BOARD NO.1-622-570-11
BVW-85P(EK) ;#10001-

CP-101P; VIDEO/AUDIO INPUT

CP-101P(1-622-570-11)
BVW-85P

CN441	F-1
CN442	D-1
CN443	A-6
CN444	A-4
D101	F-4
D102	F-5
D103	F-5
D104	F-5
D201	E-4
D202	E-4
D203	E-5
D204	E-5
D301	D-4
D302	D-4
D303	D-5
D304	D-5
D401	C-4
D402	C-4
D403	C-5
D404	C-5
FB1	E-1
FB2	E-1
FB3	G-2
FB4	G-2
FB5	E-1
FB6	G-2
*IC1	E-1
*IC2	F-1
IC101	G-6
IC102	E-6
IC201	F-6
IC301	D-6
IC302	A-6
IC401	B-6
Q401	A-4
Q402	A-3
S1	E-2
S2	G-3
S3	G-1
S4	D-2
S101	G-4
S102	G-4
S201	F-4
S202	F-4
S301	E-4
S302	E-4
S401	D-4
S402	D-4

* : SOLDERING SIDE

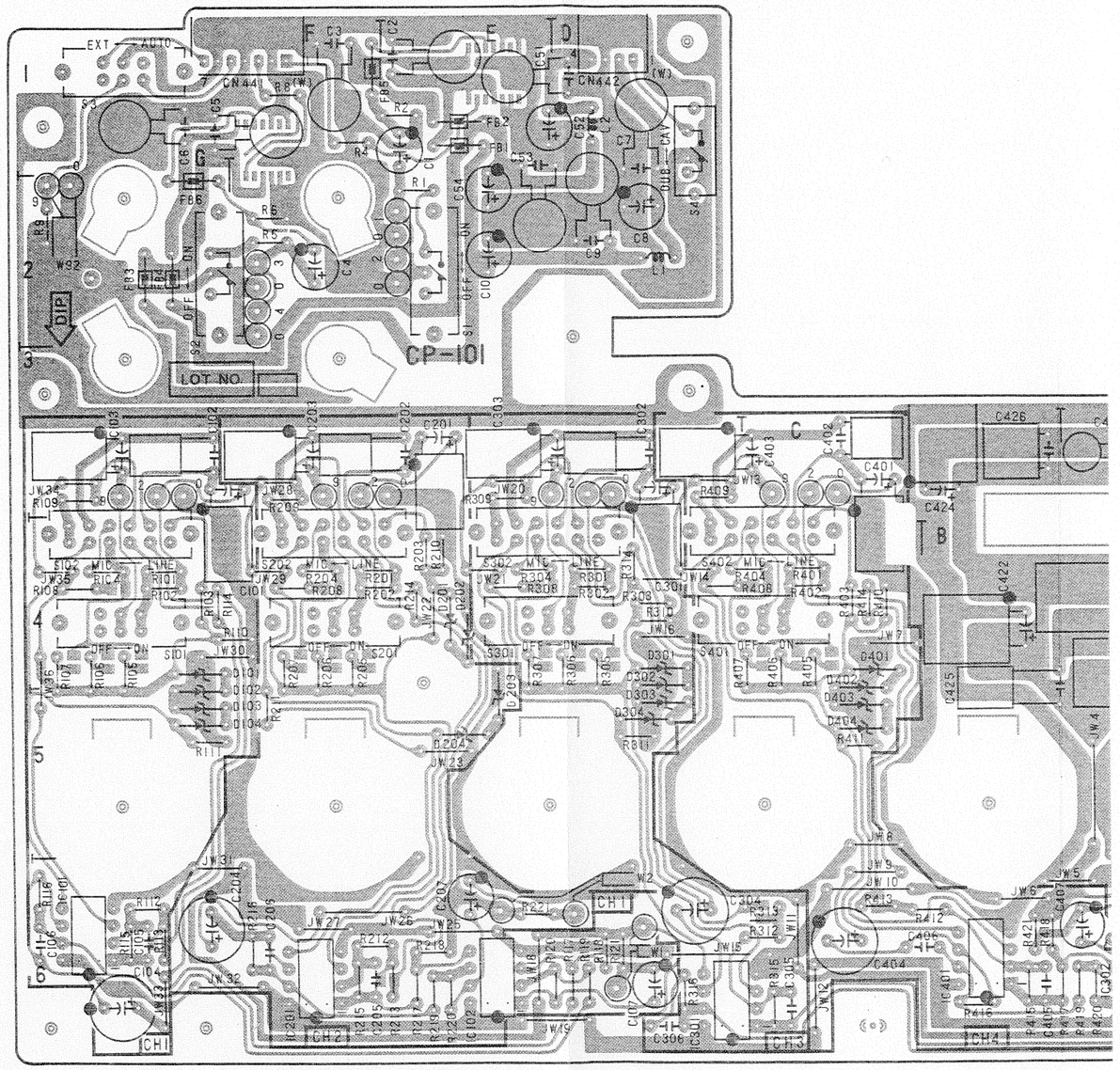

CP-101P 1-622-570-1

CP-101P; VIDEO/AUDIO INPUT

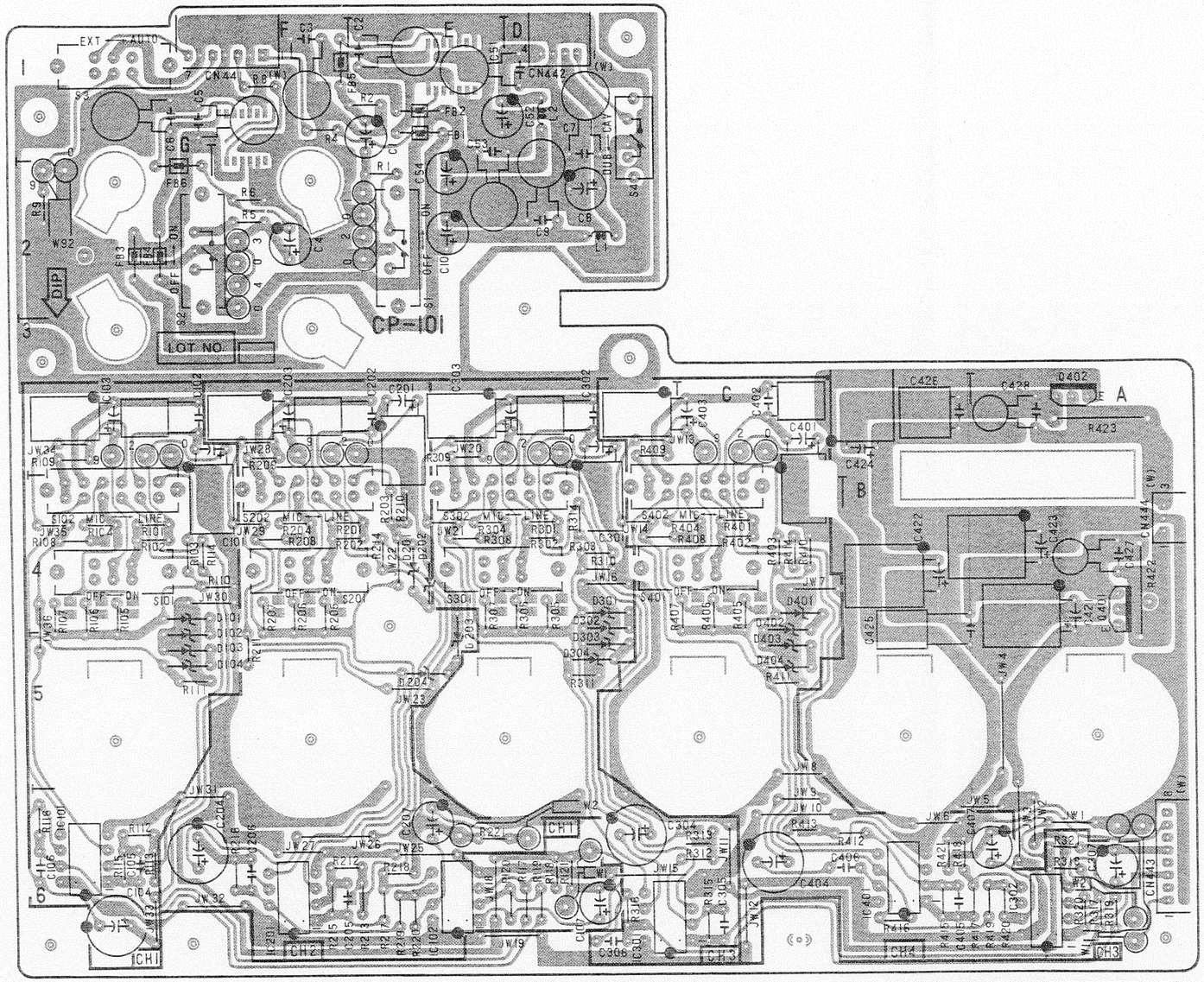

CP-153; DIGITAL AUDIO INPUT/OUTPUT BUFFER
DP-121; AUDIO SYSTEM INDICATOR

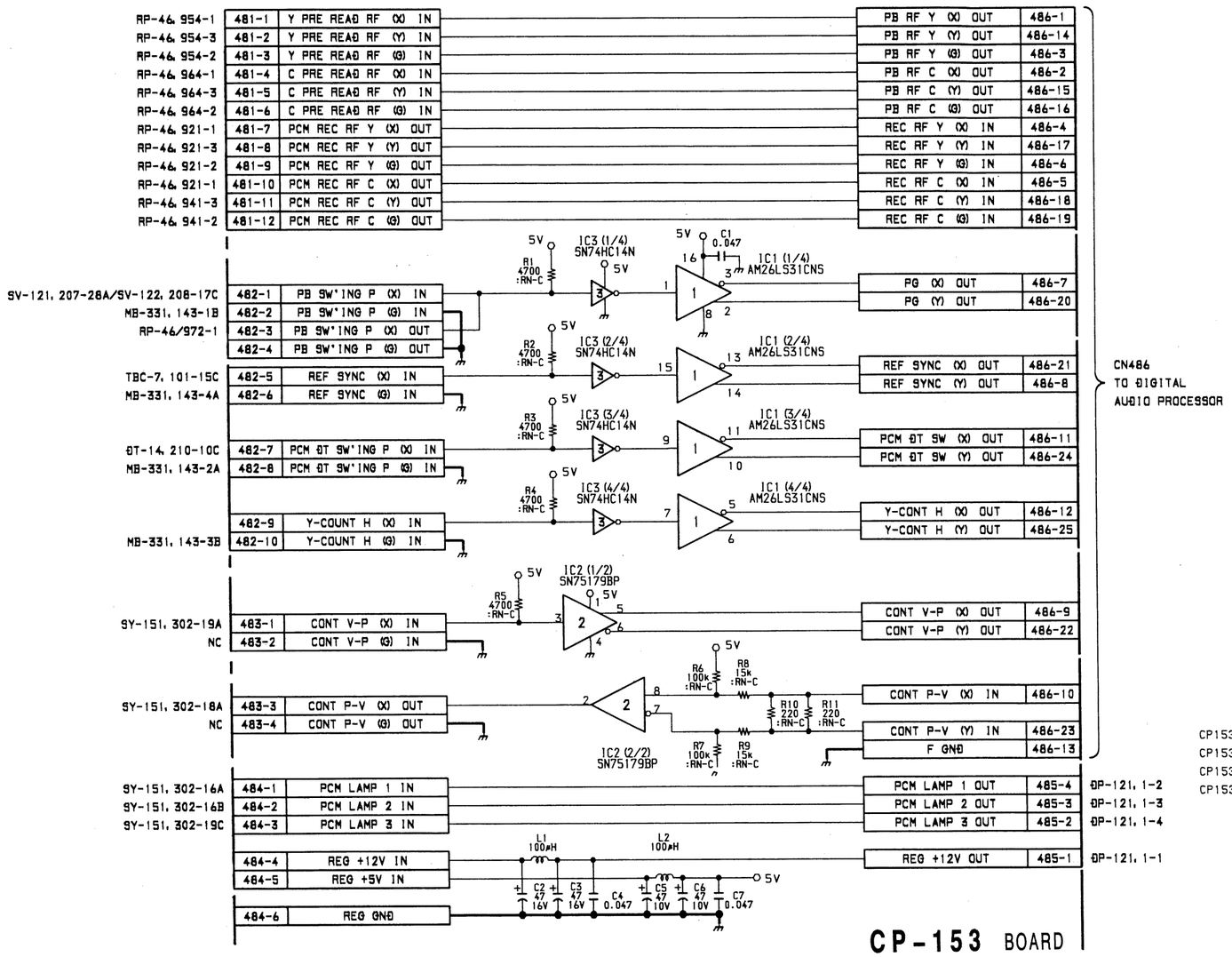

CP-153 BOARD
BOARD NO.1-635-402-11
BVW-85P(EK) ;#10001-

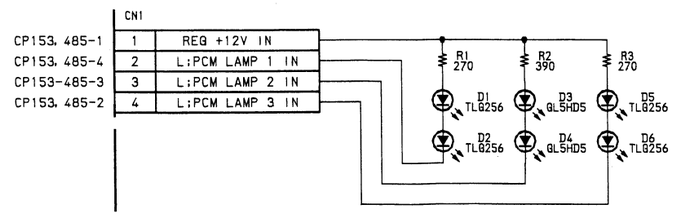

DP-121 BOARD
BOARD NO.1-635-405-11
BVW-85P(EK) ;#10001-

CP-153; DIGITAL AUDIO INPUT/OUTPUT BUFFER
DP-121; AUDIO SYSTEM INDICATOR

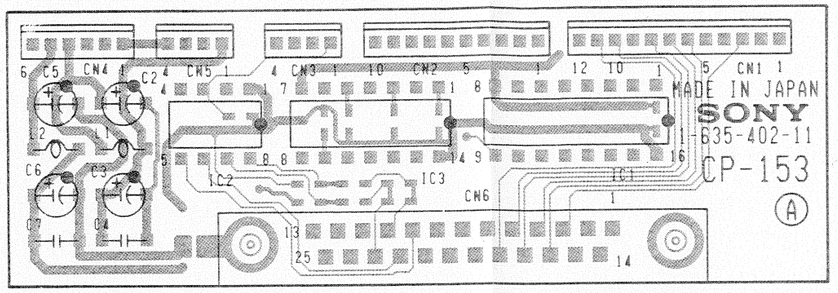

CP-153 1-635-402-11 A SIDE

A Side is the same as Component Side.

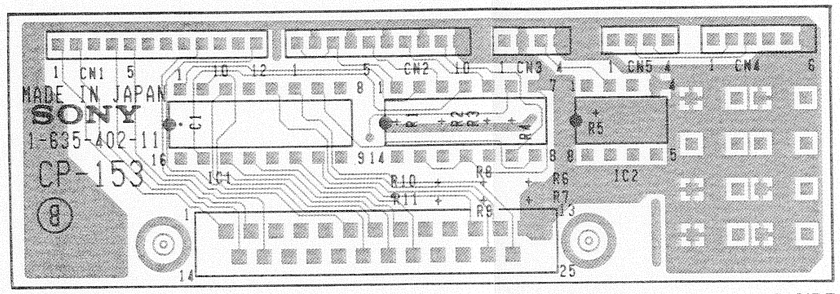

CP-153 1-635-402-11 B SIDE

B Side is the same as Solder Side.

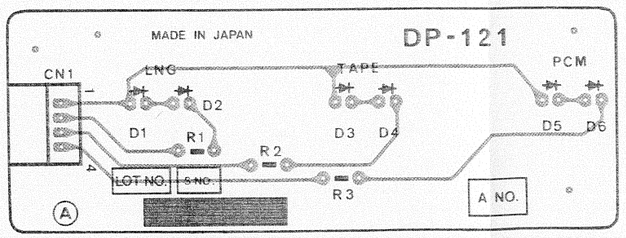

DP-121 1-635-405-11 A SIDE

A Side is the same as Component Side.

BF-28(1/3); AUDIO REC/PB LEVEL CONTROL
VR-42; AUDIO REC/PB VOLUME

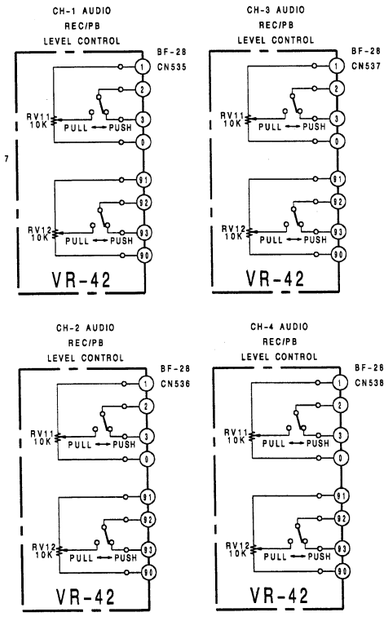

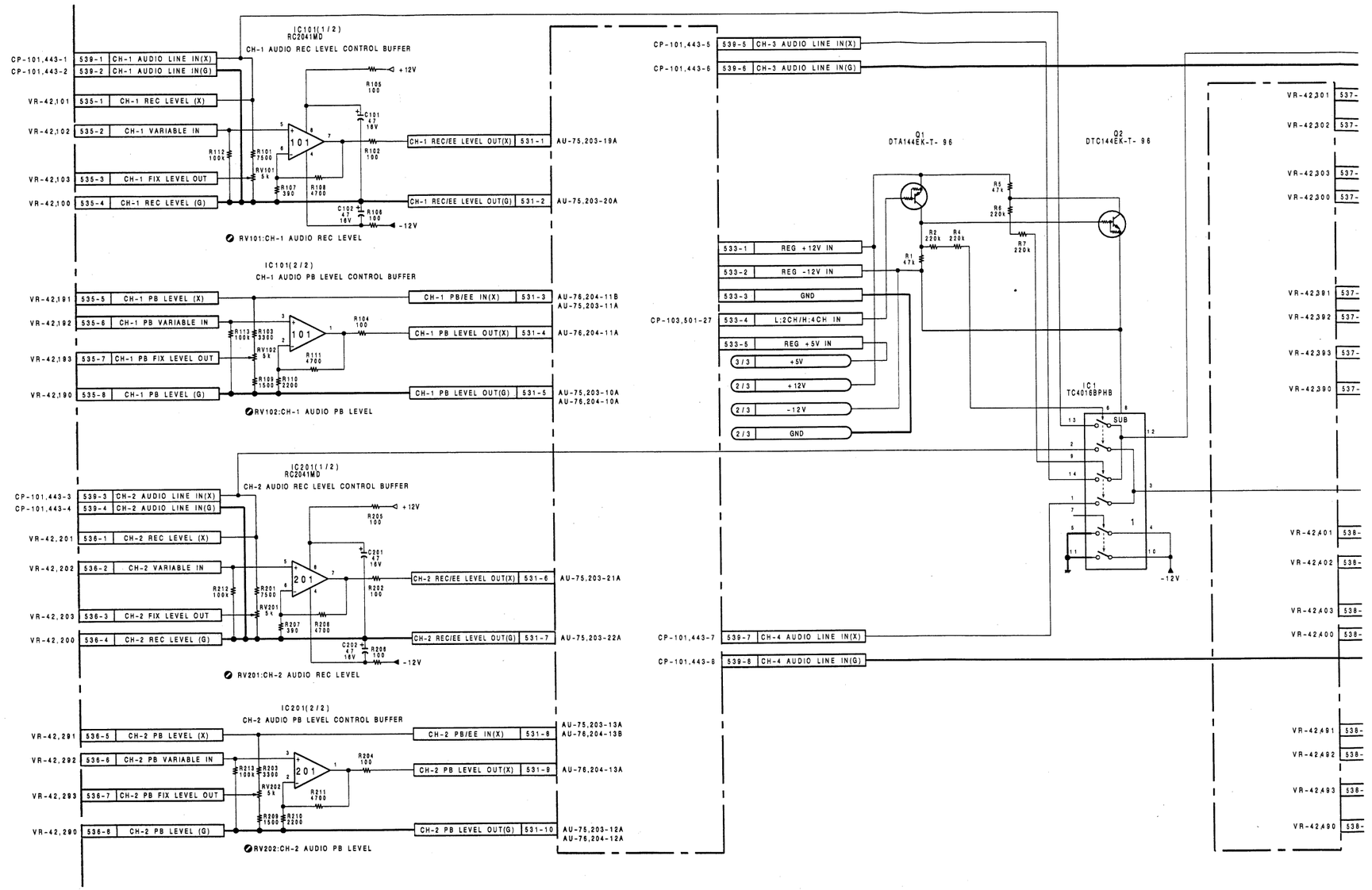

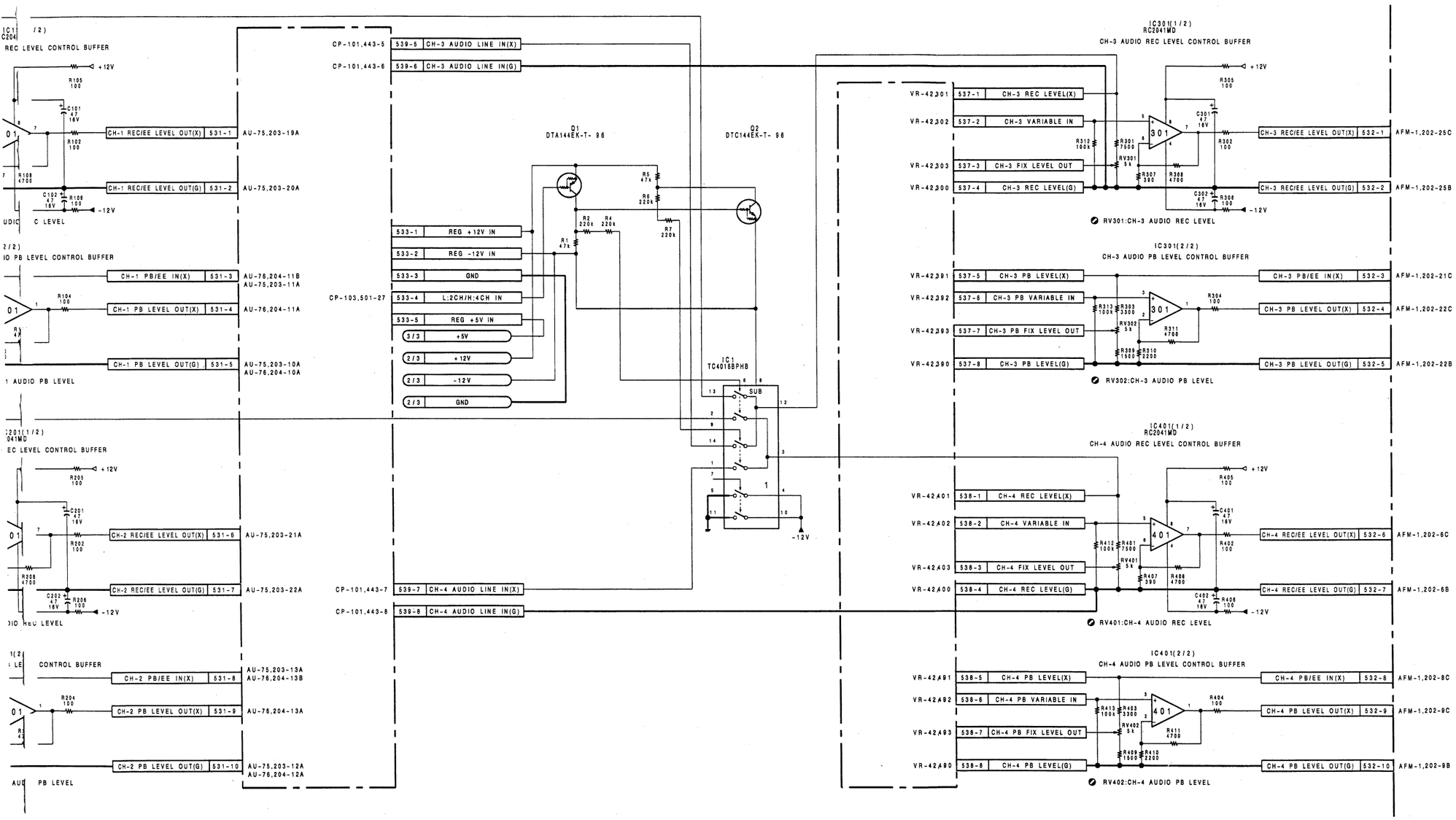

BF-28 BOARD (1/3)

BOARD NO.1-622-574-15
BVW-85P(EK) ;#10001-

BF-28(2/3); AUDIO LEVEL VU/dB DETECTOR

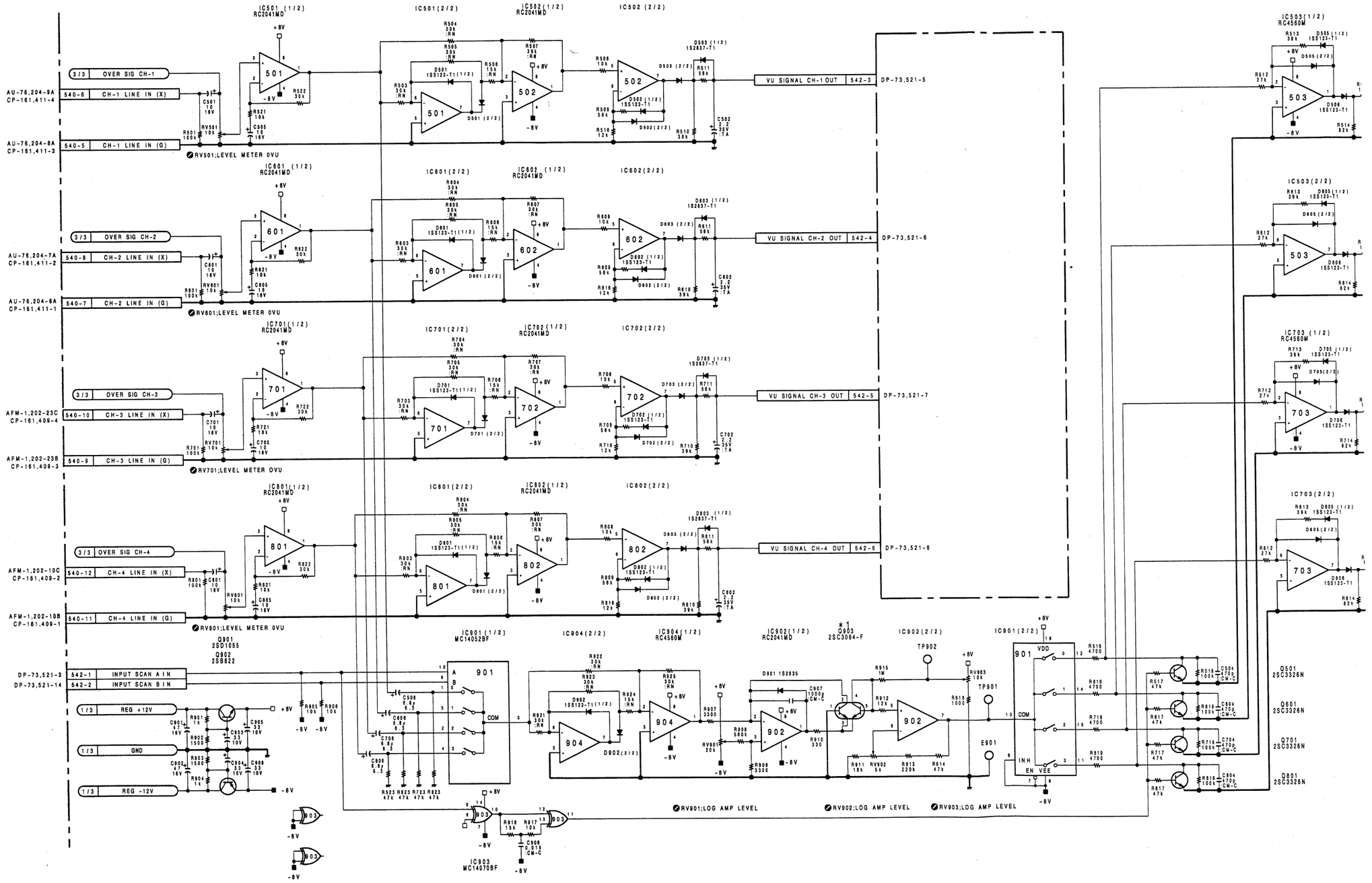

17-367 17-368

A B C D E F G H

BF-28(2/3)

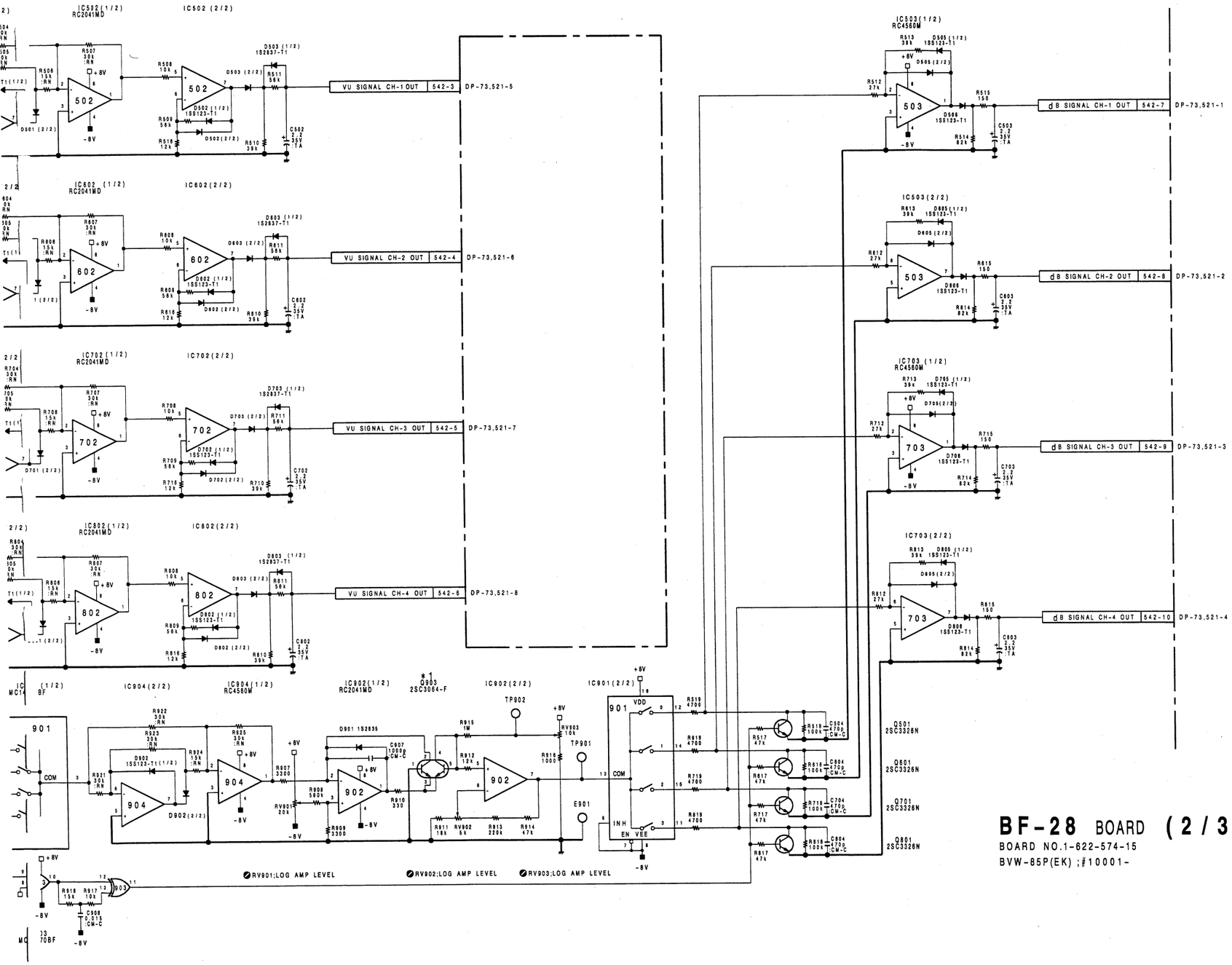

BF-28 BOARD (2/3)

BOARD NO.1-622-574-15

BVW-85P(EK) ;#10001-

NOTE;

ADDRESS	MARK	CHANGE INFORMATION	SERIAL NO.
F4	*1	TRANSISTOR TYPE CHANGE Q903:2SC2259-G TO 2SC3064-F	#10109-

BF-28(3/3); AUDIO LEVEL OVER DETECTOR

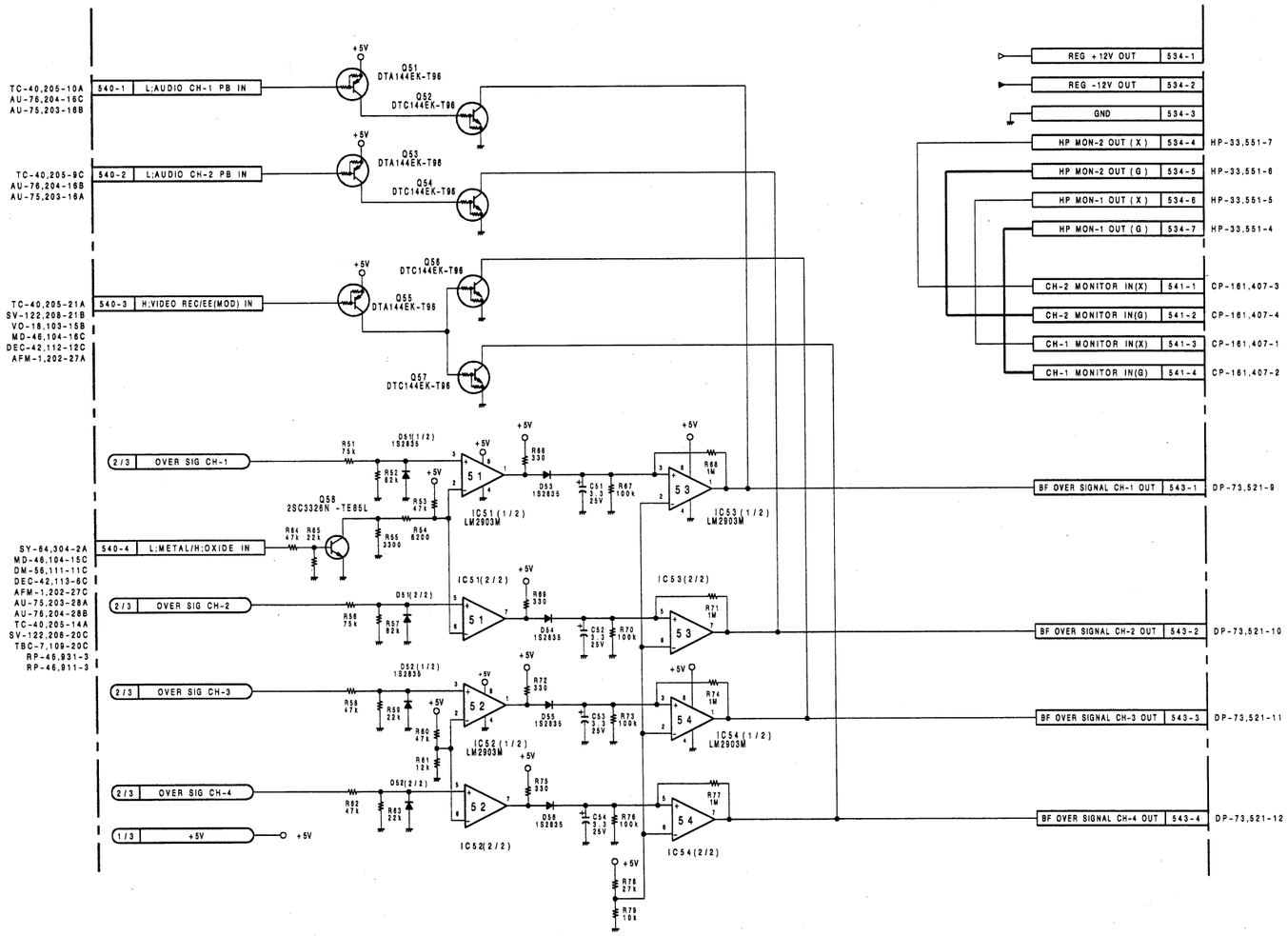

BF-28 BOARD **(3/3)**

BOARD NO.1-622-574-15

BVW-85P(EK) ;#10001-

17-373 17-374

A B C D E F G H

1 2 3 4 5

BF-28; AUDIO BUFFER/LEVEL METER DRIVER
VR-42; AUDIO REC/PB VOLUME

BF-28(1-622-574-15)

BVW-85P

CN531	B-5	IC703	C-3
CN532	B-2	IC801	H-1
CN533	C-5	IC802	F-1
CN534	E-4	IC901	G-3
CN535	A-5	IC902	F-3
CN536	A-4	IC903	J-1
CN537	A-2	IC904	F-5
CN538	A-1		
CN539	C-2	*Q1	B-5
CN540	K-2	*Q2	B-4
CN541	C-4	*Q51	K-4
CN542	E-2	*Q52	K-5
CN543	G-5	*Q53	K-4
		*Q54	K-5
*D51	J-3	*Q55	K-3
*D52	I-3	*Q56	K-5
*D53	K-4	*Q57	K-4
*D54	J-4	*Q58	K-4
*D55	J-4	*Q501	H-3
*D56	I-4	*Q601	H-3
*D501	H-2	*Q701	H-4
*D502	F-2	*Q801	H-4
*D503	F-2	Q901	D-5
*D505	D-2	Q902	D-4
*D506	D-2	Q903	F-4
*D601	H-2		
*D602	F-2	RV101	A-5
*D603	F-2	RV102	A-4
*D605	D-2	RV201	A-4
*D606	D-2	RV202	A-3
*D701	H-1	RV301	A-3
*D702	F-1	RV302	A-2
*D703	F-1	RV401	A-2
*D705	D-2	RV402	A-1
*D706	D-2	RV501	I-2
*D801	H-1	RV601	I-2
*D802	F-1	RV701	I-1
*D803	F-1	RV801	I-1
*D805	D-2	RV901	H-5
*D806	D-1	RV902	H-5
*D901	F-4	RV903	H-4
*D902	F-5		
		TP901	E-4
E901	E-5	TP902	G-4
IC1	B-3		
IC51	J-4		
IC52	I-4		
IC53	I-5		
IC54	I-5		
IC101	A-4		
IC201	A-3		
IC301	A-2		
IC401	A-1		
IC501	H-3		
IC502	F-3		
IC503	D-3		
IC601	H-2		
IC602	F-2		
IC701	H-1		
IC702	F-1		

* : SOLDERING SIDE

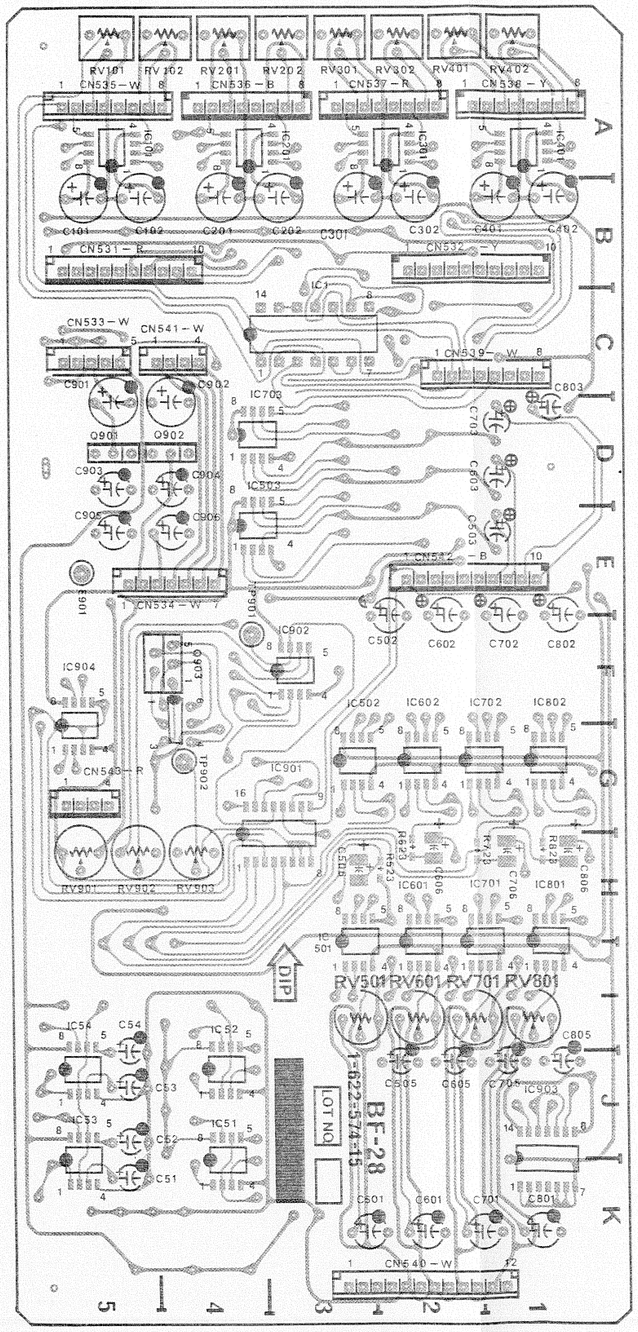

BF-28 1-622-574-15 COMPONENT SIDE

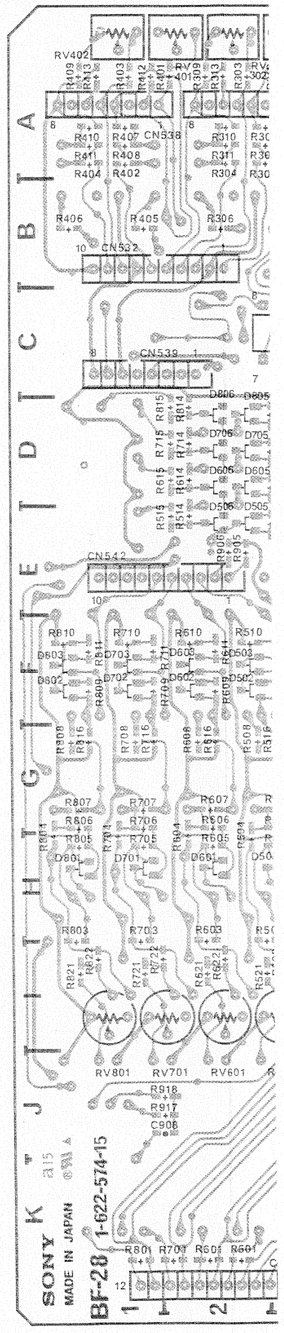

BF-28; AUDIO BUFFER/LEVEL METER DRIVER
VR-42; AUDIO REC/PB VOLUME

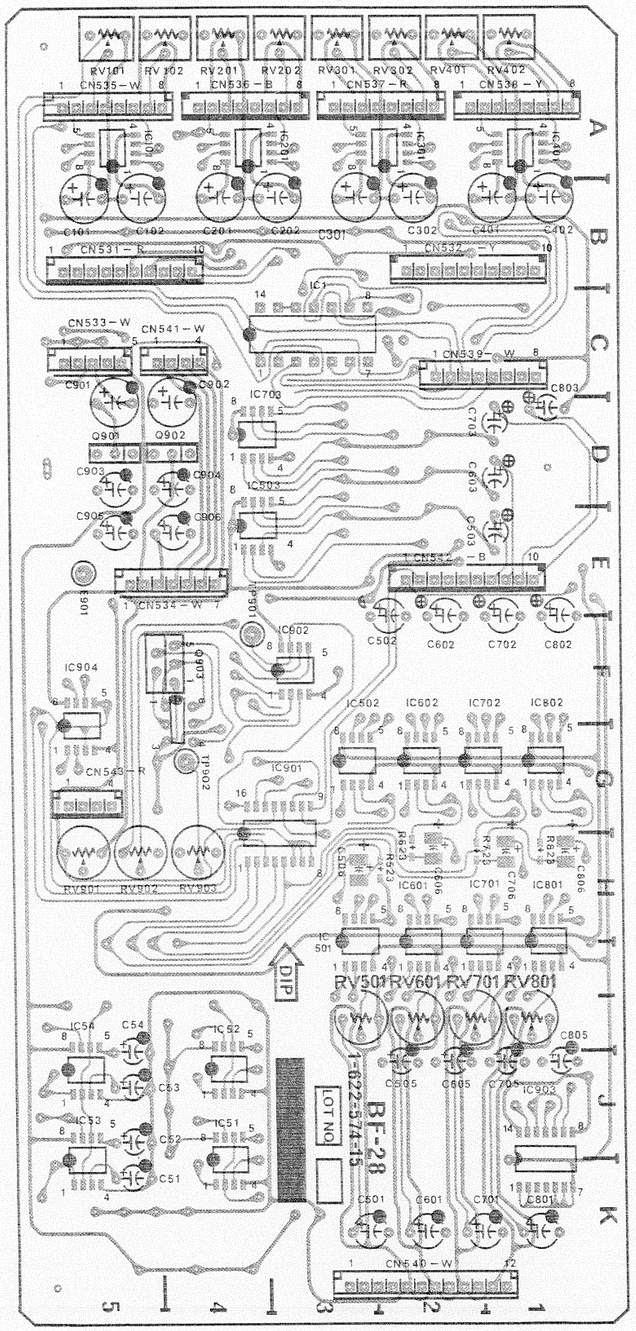

BF-28 1-622-574-15 COMPONENT SIDE

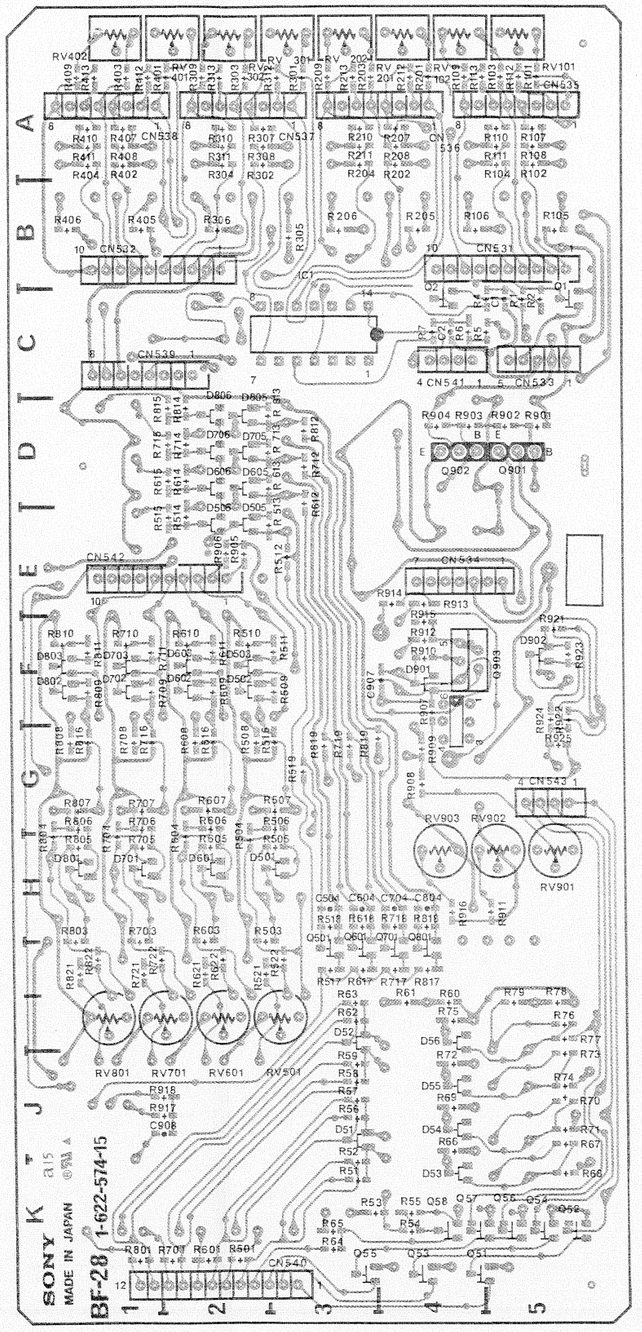

BF-28 1-622-574-15 SOLDER SIDE

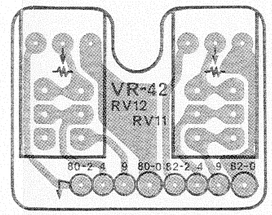

VR-42 1-622-592-12 COMPONENT SIDE

AU-75P; LNG AUDIO REC/PB AMPLIFIER
DUS-295; CROSS TALK CANCEL EQUALIZER

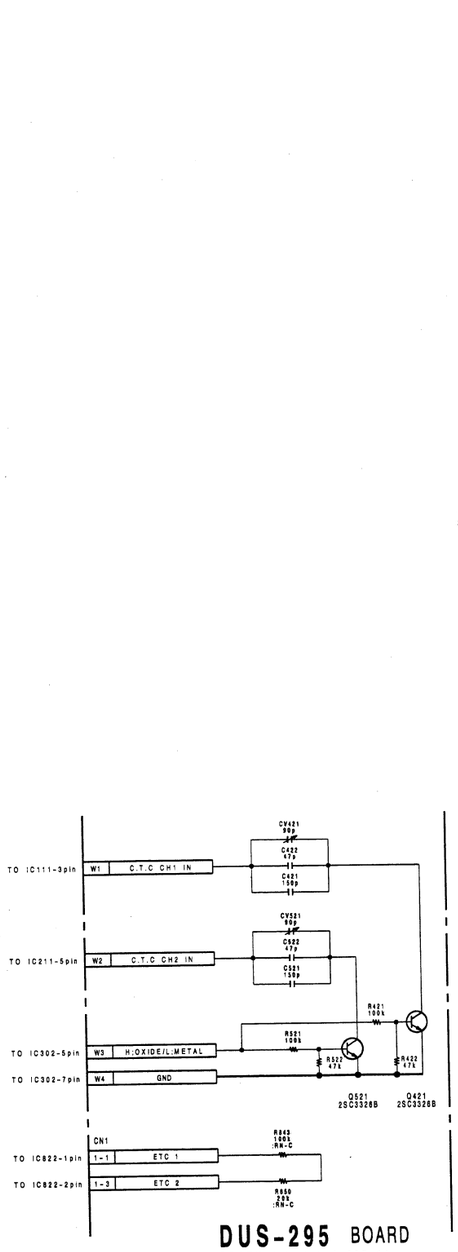

DUS-295 BOARD
BOARD NO. 1-630-205-11
BVW-85P(EK) ;#10001-

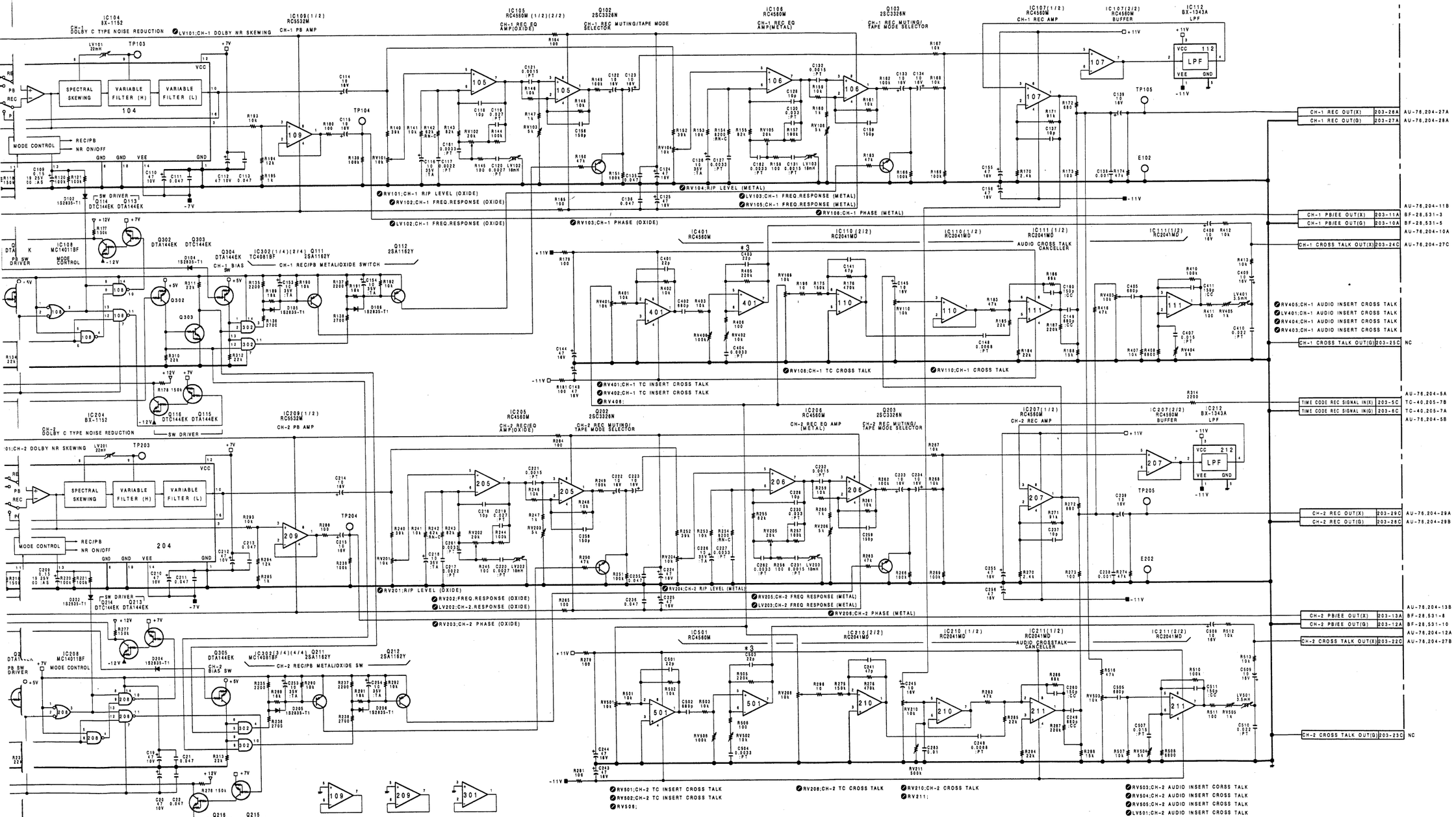

NOTE:

ADDRESS	MARK	CHANGE INFORMATION	SERIAL NO.
G1,G2	#1	R815:56K TO 150K,R816:150K TO 100K R818:150K TO 270K,R831:150K TO 75K R819:22K TO 18K,R833:130K TO 120K R834:18K TO 39K,R836:470K TO 820K R837:82K TO 68K	/10034-
G3	#2	R825:75K TO 220K,R828:270K TO 470K R829:56K TO 75K	/10034-
L2,L5	#3	C403,503:22P DELETED E101:ADDED	/10074-

AU-75P BOARD

BOARD NO.1-622-567-13

BVW-85P(EK) ;#10001-

AU-75P DUS-295

AU-75P(1-622-567-13)

BVW-85P

*D101	J-10	LV101	J-5	RV101	H-1
*D102	G-4	LV102	F-2	RV102	G-1
*D103	H-8	LV103	C-2	RV103	G-2
*D104	C-12	LV201	F-5	RV104	E-1
*D105	G-6	LV202	D-1	RV105	D-1
*D106	D-6	LV203	B-2	RV106	C-2
*D201	F-10	LV401	C-6	RV107	H-8
*D202	F-4	LV501	A-7	RV108	C-9
*D203	F-9			RV110	C-8
*D204	C-12	Q1	A-11	RV201	F-1
*D205	H-5	Q2	H-12	RV202	F-1
*D206	D-7	Q3	B-10	RV203	E-1
*D301	F-12	Q4	J-11	RV204	C-1
		Q101	J-10	RV205	B-1
E102	D-1	*Q102	G-3	RV206	A-2
E201	F-6	*Q103	C-3	RV207	F-9
E202	B-1	Q104	H-10	RV208	B-9
		*Q105	H-8	RV210	B-8
FL101	H-9	*Q106	G-9	RV211	B-8
FL201	H-7	Q107	G-9	RV401	B-10
		Q108	G-9	RV402	C-9
IC101	H-11	*Q109	D-11	RV403	D-4
IC104	H-4	*Q110	D-11	RV404	C-4
IC105	G-2	*Q111	G-5	RV405	C-6
IC106	D-3	*Q112	D-6	RV406	C-9
IC107	D-4	*Q113	E-10	RV501	A-9
IC108	D-10	*Q114	E-9	RV502	B-9
IC109	H-6	*Q115	E-10	RV503	B-6
IC110	C-8	*Q116	E-9	RV504	C-5
IC111	C-5	Q201	F-10	RV505	B-6
IC112	E-4	*Q202	D-3	RV506	B-9
IC201	E-10	*Q203	B-3	RV811	H-7
IC204	F-4	Q204	F-10	RV821	G-7
IC205	F-3	*Q205	F-8		
IC206	A-3	*Q206	F-8	TP101	J-8
IC207	B-3	Q207	E-9	TP102	J-5
IC208	D-9	Q208	E-9	TP103	H-1
IC209	E-5	*Q209	E-11	TP104	J-5
IC210	A-8	*Q210	D-11	TP105	C-1
IC211	B-5	*Q211	H-5	TP201	E-7
IC212	B-4	*Q212	E-6	TP202	G-6
IC301	F-10	*Q213	E-10	TP203	G-1
IC302	D-8	*Q214	F-9	TP204	E-6
IC401	C-9	*Q215	E-9	TP205	B-1
IC501	B-9	*Q216	F-9		
IC801	G-8	*Q301	F-11		
IC811	H-7	*Q302	D-9		
IC812	H-8	*Q303	E-8		
IC821	F-7	*Q304	D-8		
IC822	E-7	*Q305	D-8		

* : SOLDERING SIDE

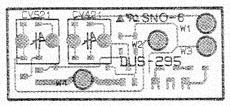

DUS-295 1-630-205-11 A SIDE

A Side is the same as Component Side.

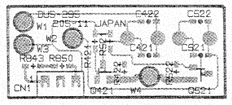

DUS-295 1-630-205-11 B SIDE

B Side is the same as Solder Side.

AU-75P; LNG AUDIO REC/PB AMPLIFIER
DUS-295; CROSS TALK CANCEL EQ.

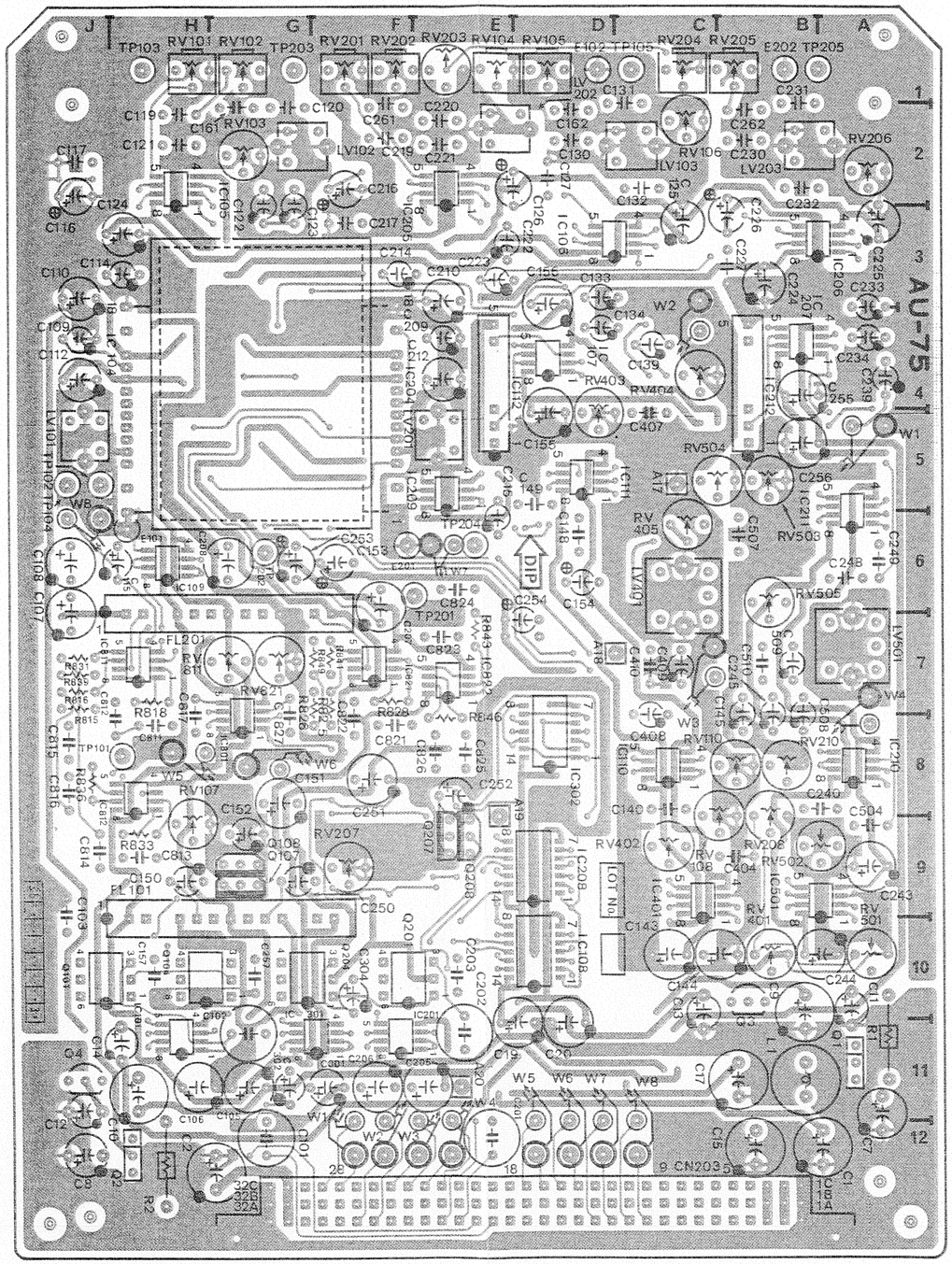

AU-75P 1-622-567-13 COMPONENT SIDE

AU-75P; LNG AUDIO REC/PB AMPLIFIER
DUS-295; CROSS TALK CANCEL EQ.

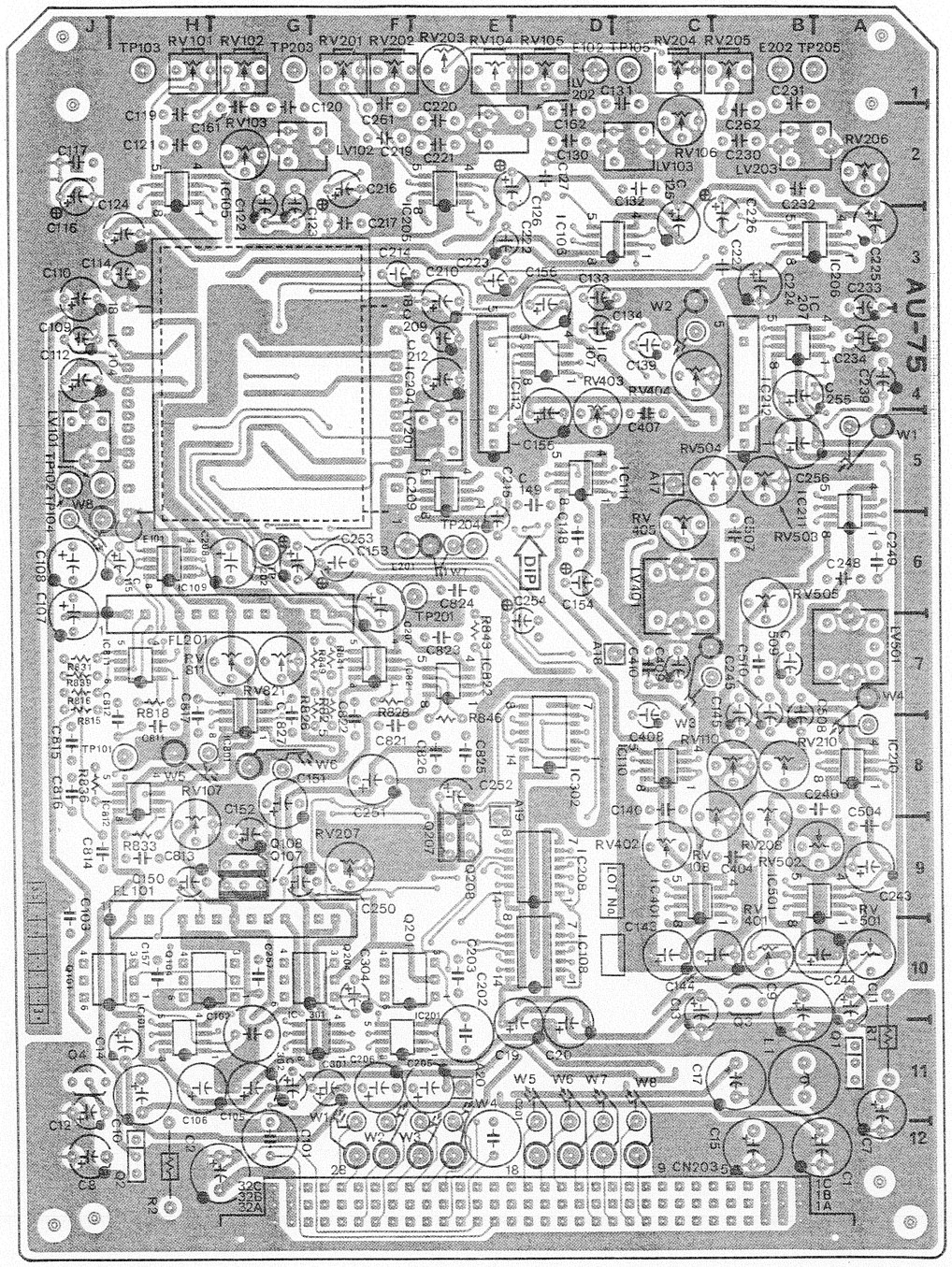

AU-75P 1-622-567-13 COMPONENT SIDE

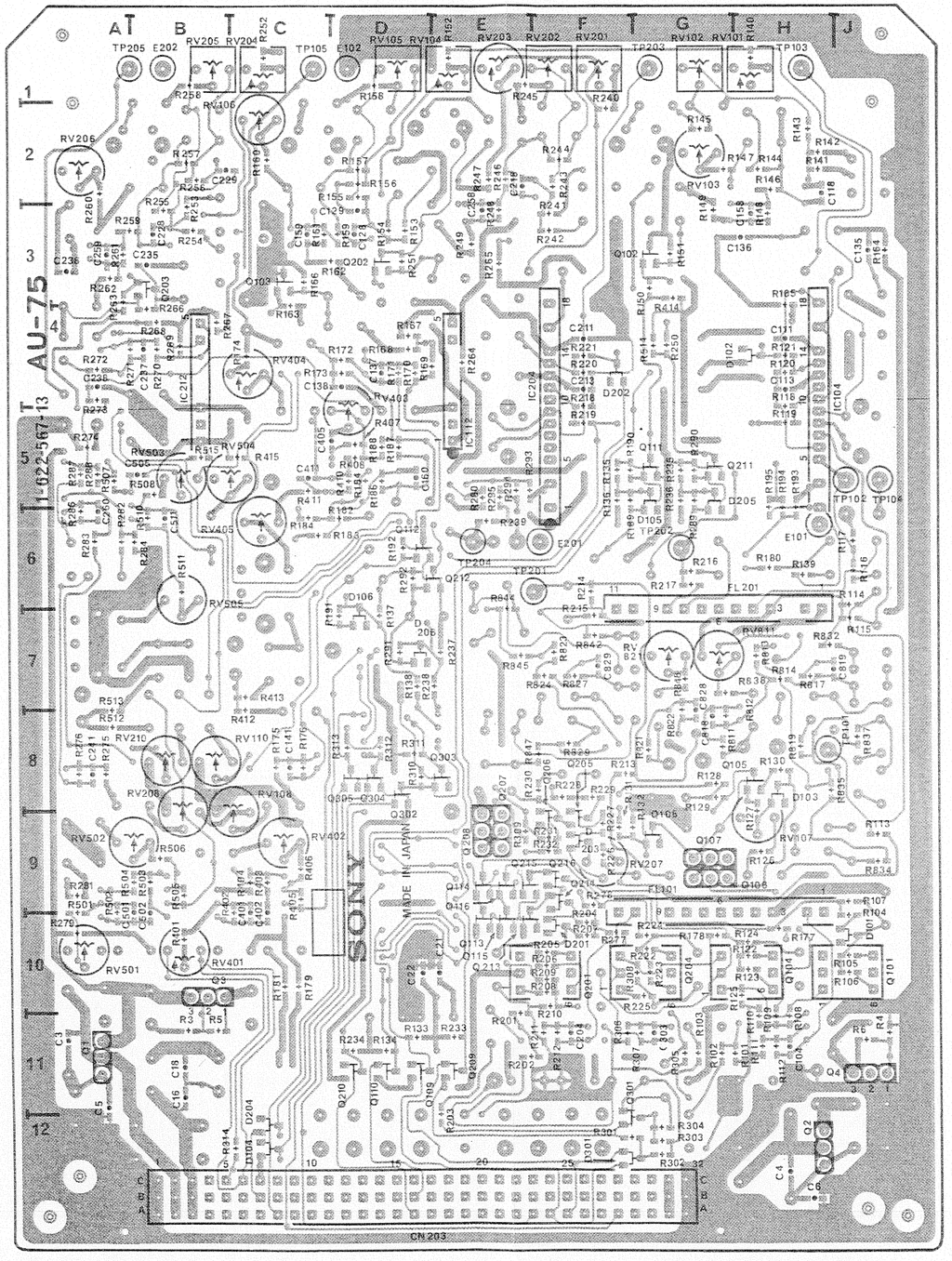

AU-75P 1-622-567-13 SOLDER SIDE

AU-76PC(1/3); LNG AUDIO CONFI PB AMPLIFIER

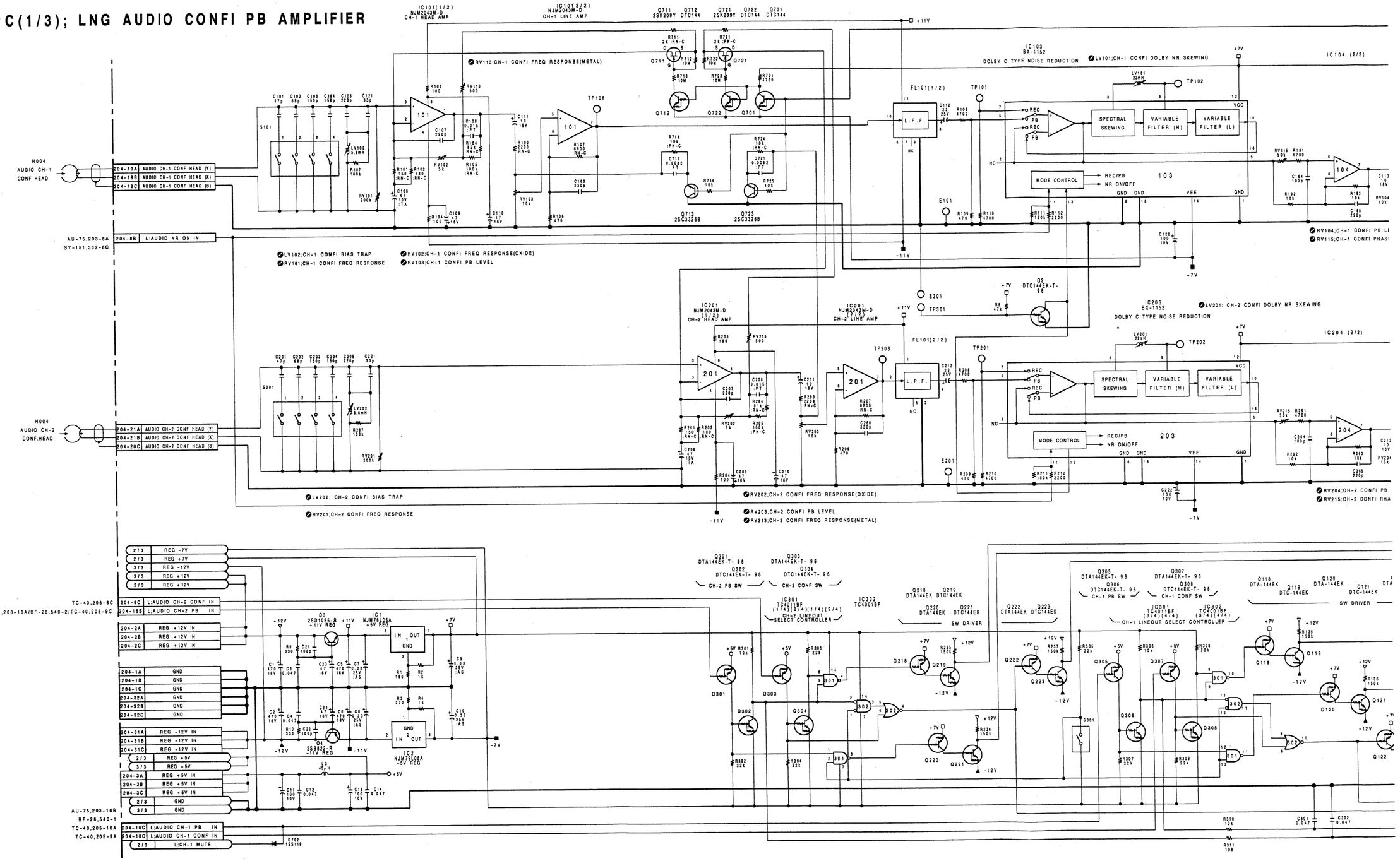

AU-76PC(1/3)

AU-76PC BOARD (1/3)

BOARD NO.1-622-568-16

BVW-85P(EK) ;#10001-

AU-76PC(2/3); LNG AUDIO HEAD AMPLIFIER

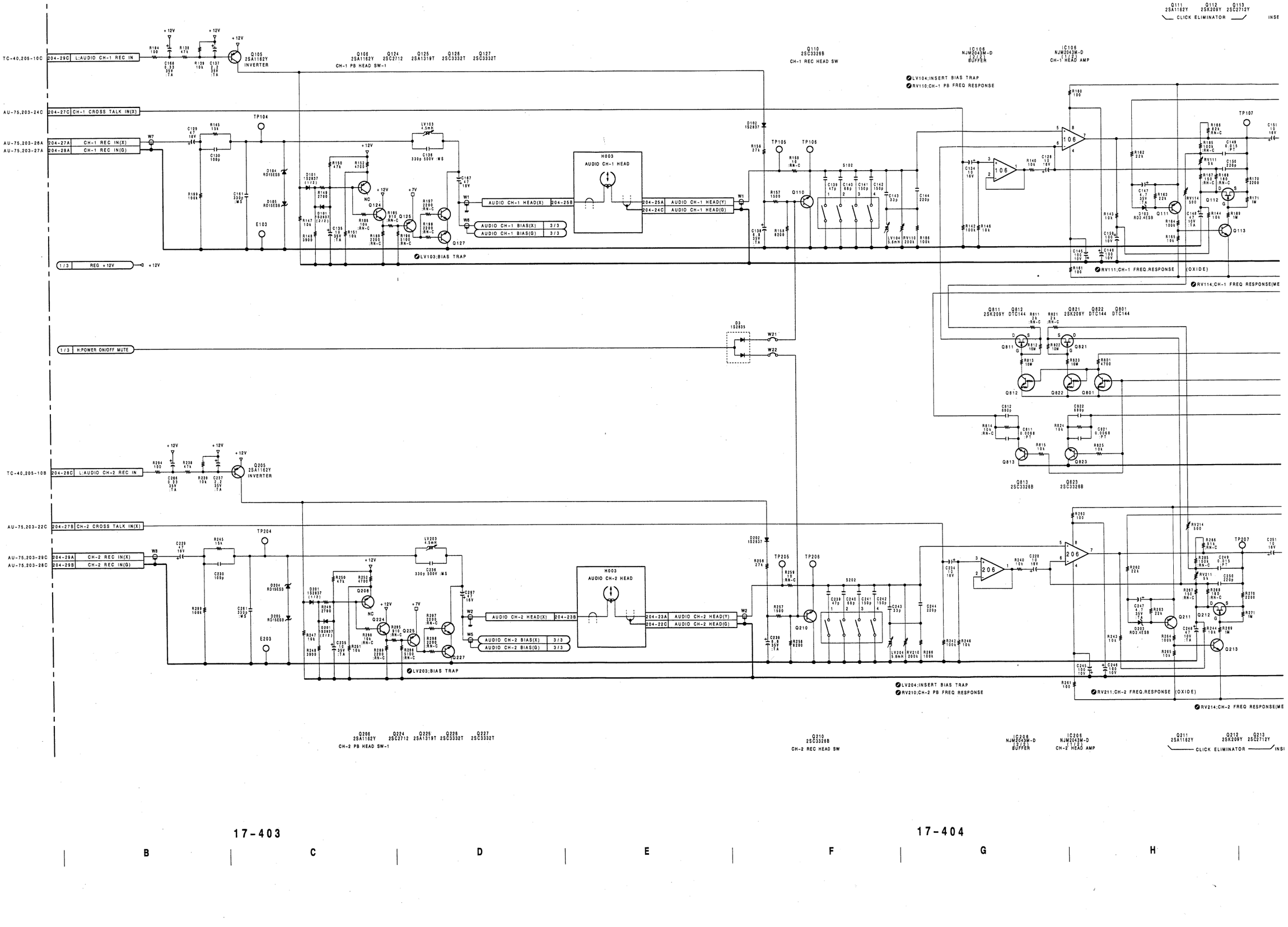

17-403 17-404

A B C D E F G H

AU-76PC(2/3)

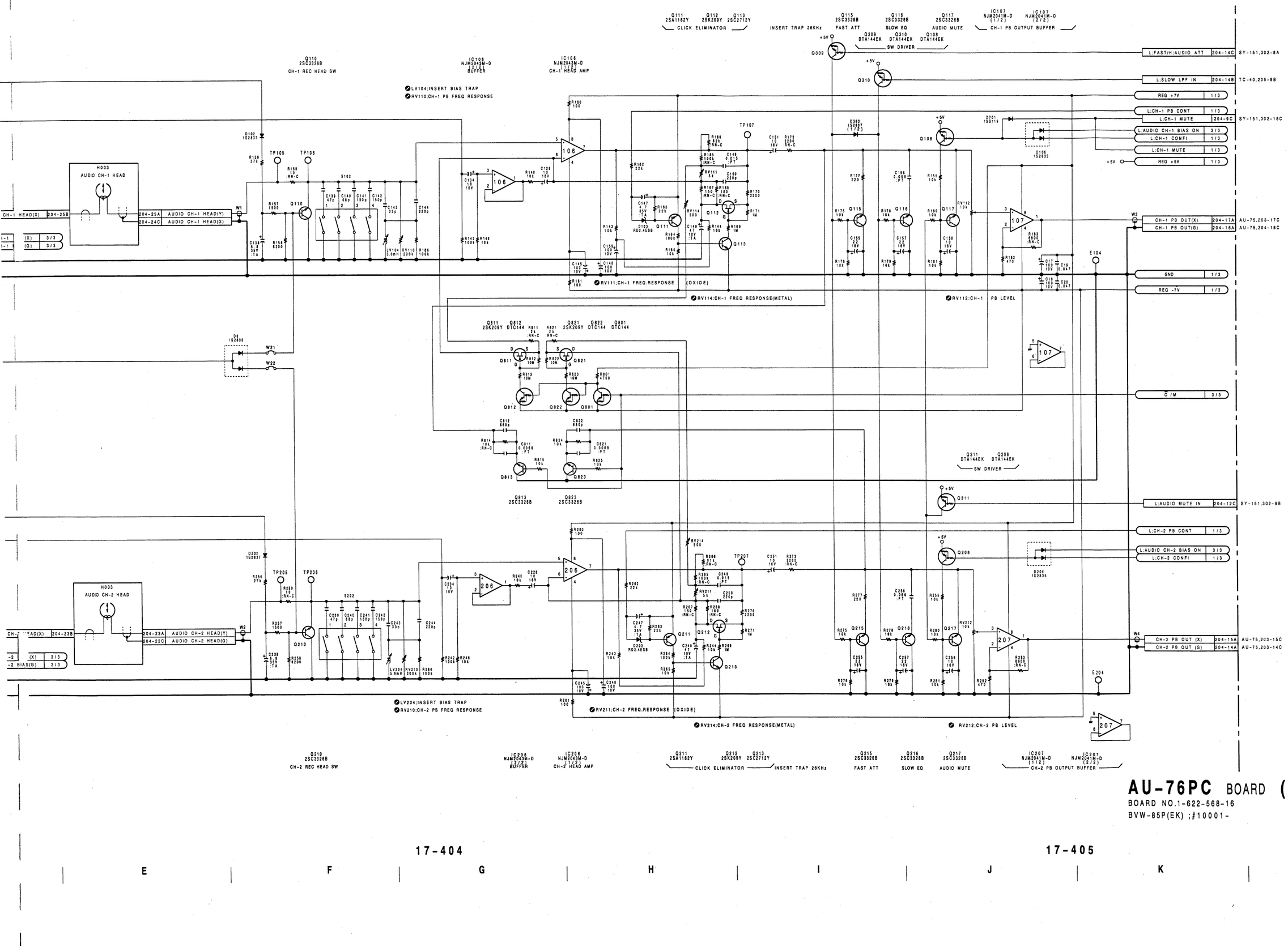

AU-76PC BOARD (2/3)

BOARD NO.1-622-568-16

BVW-85P(EK) ;#10001-

AU-76PC(3/3); LNG AUDIO BIAS OSCILLATOR

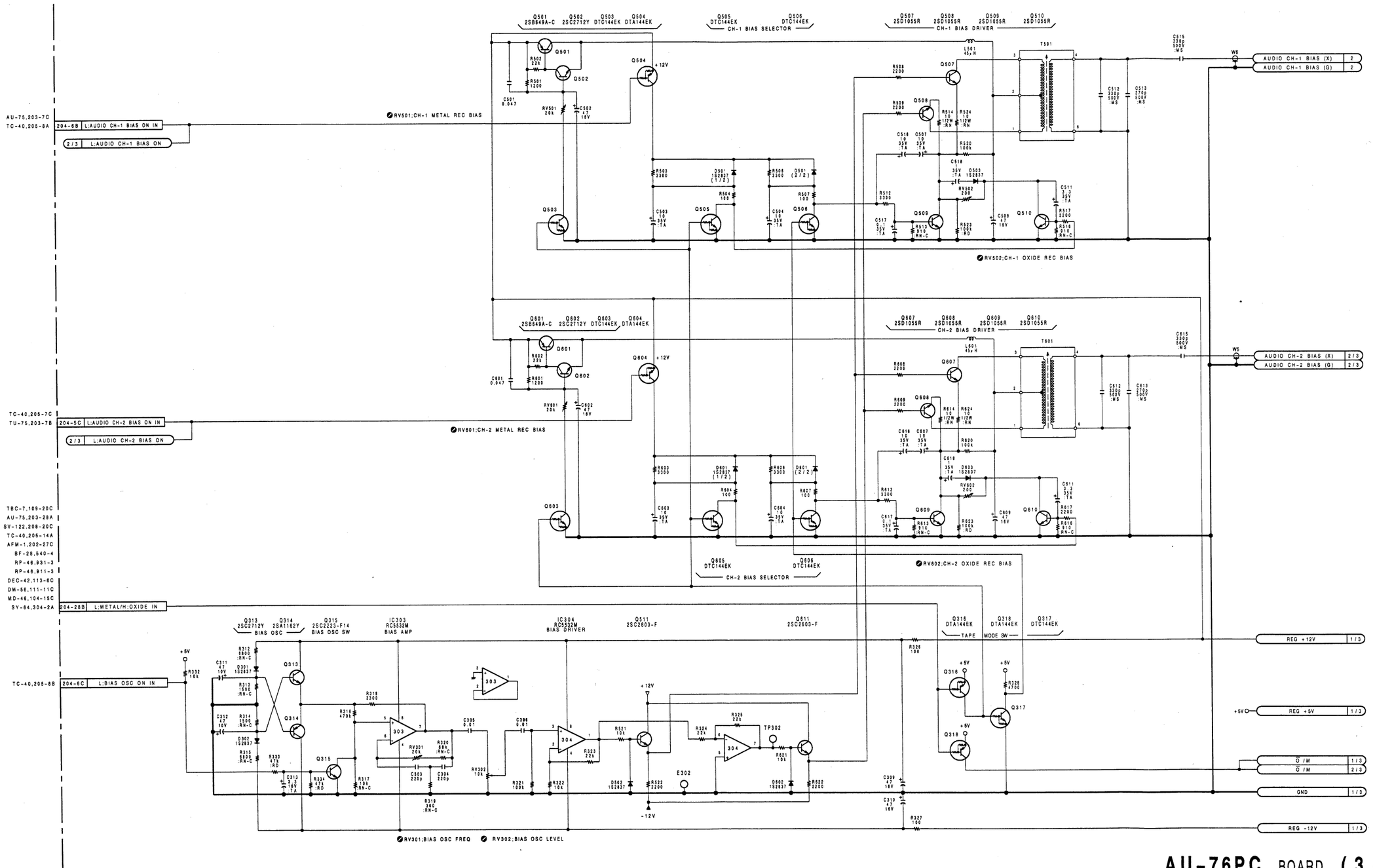

AU-76PC BOARD (3/3)

BOARD NO.1-622-568-16

BVW-85P(EK) ;#10001-

17-409 17-410

A B C D E F G H

AU-76PC; LNG AUDIO HEAD AMPLIFIER,BIAS OSCILLATOR

AU-76PC(1-622-568-16)
BVW-85P

CN204	F-9	LV203	F-4	*Q307	A-7	RV204	B-7
		LV204	F-2	*Q308	A-6	RV205	B-7
D1	B-7			*Q309	G-6	RV210	E-2
D2	A-7	*Q1	B-8	*Q310	G-6	RV211	F-1
*D3	D-5	*Q2	E-6	*Q311	G-6	RV212	F-1
*D101	C-4	Q3	A-8	*Q313	C-5	RV213	E-8
*D102	E-3	Q4	F-9	*Q314	C-4	RV214	F-2
*D103	E-1	Q101	C-6	*Q315	C-5	RV215	B-7
*D104	E-4	Q102	C-6	*Q316	A-1	RV301	B-4
*D105	E-4	Q103	C-6	*Q317	A-3	RV302	B-4
*D106	E-5	*Q104	C-8	*Q318	A-1	RV501	C-1
*D201	G-4	*Q105	D-3	*Q501	C-4	RV502	C-1
*D202	F-3	*Q106	D-4	*Q502	C-4	RV601	B-1
*D203	F-1	*Q108	G-5	*Q503	C-1	RV602	B-1
*D204	F-4	*Q110	E-3	*Q504	C-3		
*D205	G-4	*Q111	D-1	*Q505	C-3	S101	D-8
*D206	E-5	*Q112	E-1	*Q506	C-3	S102	D-3
*D301	C-4	*Q113	D-2	Q507	C-2	S201	F-8
*D302	C-4	*Q115	C-2	Q508	C-2	S202	E-3
*D303	G-6	*Q116	C-3	Q509	C-2	S301	B-1
*D501	C-3	*Q117	C-3	Q510	C-3		
*D502	B-4	*Q118	A-5	Q601	A-4	TP102	D-6
*D503	B-2	*Q119	A-5	*Q602	A-3	TP103	D-1
*D601	B-3	*Q120	A-5	*Q603	B-1	TP104	E-4
*D602	A-4	*Q121	A-5	*Q604	A-3	TP105	E-3
*D603	A-2	*Q122	A-6	*Q605	B-3	TP106	E-3
*D701	B-9	*Q123	A-6	*Q606	B-3	TP107	E-1
*D702	C-8	*Q124	D-5	Q607	B-2	TP108	E-7
		Q125	D-5	Q608	B-2	TP202	F-6
E101	D-7	Q126	E-4	Q609	B-2	TP203	D-1
E102	D-1	Q127	E-4	Q610	B-3	TP204	F-4
E103	E-5	Q201	B-6	Q611	A-4	TP205	F-3
E104	E-1	Q202	B-6	*Q701	E-6	TP206	F-3
E201	F-7	Q203	B-5	*Q711	D-7	TP207	F-1
E202	C-1	*Q204	B-8	*Q712	E-6	TP208	F-7
E203	G-5	*Q205	G-3	*Q713	E-6	TP302	B-4
E204	F-1	*Q206	G-4	*Q721	E-7		
E302	A-4	*Q208	G-5	*Q722	F-6		
		*Q210	F-3	*Q723	E-6		
FL101	F-7	*Q211	E-1	*Q801	D-2		
		*Q212	F-1	*Q811	E-2		
IC1	A-7	*Q213	F-2	*Q812	E-2		
IC2	G-8	*Q215	G-3	*Q813	D-2		
IC101	D-7	*Q216	G-3	*Q821	F-2		
IC103	E-5	*Q217	G-2	*Q822	F-2		
IC104	C-8	*Q218	A-5	*Q823	G-1		
IC106	E-1	*Q219	B-5				
IC107	D-2	*Q220	A-5	RV101	D-7		
IC201	F-7	*Q221	B-5	RV102	E-8		
IC204	C-8	*Q222	A-6	RV103	D-7		
IC206	F-1	*Q223	B-6	RV104	C-7		
IC207	G-1	*Q224	F-5	RV105	C-7		
IC301	B-5	Q225	F-4	RV110	D-2		
IC302	B-6	Q226	F-4	RV111	E-1		
IC303	C-4	Q227	F-4	RV112	D-1		
IC304	A-4	*Q301	A-7	RV113	E-8		
		*Q302	A-6	RV114	E-2		
LV102	D-8	*Q303	B-7	RV115	C-7		
LV103	E-4	*Q304	B-6	RV201	G-7		
LV104	E-2	*Q305	A-7	RV202	E-8		
LV202	F-8	*Q306	A-6	RV203	G-7		

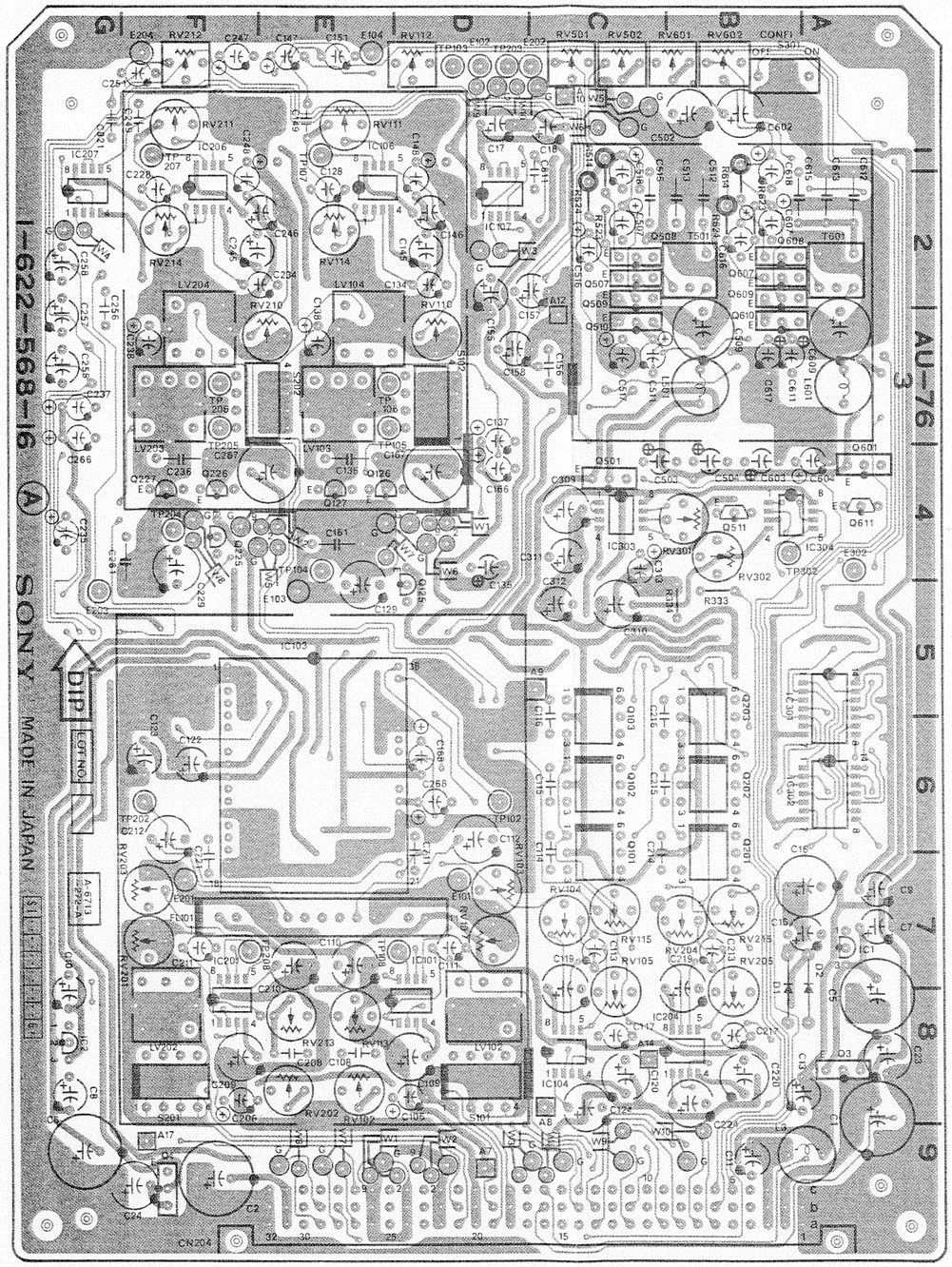

AU-76PC 1-622-568-16 A SIDE

A Side is the same as Component Side.

* : SOLDERING SIDE

AU-76PC

AU-76PC; LNG AUDIO HEAD AMPLIFIER,BIAS OSCILLATOR

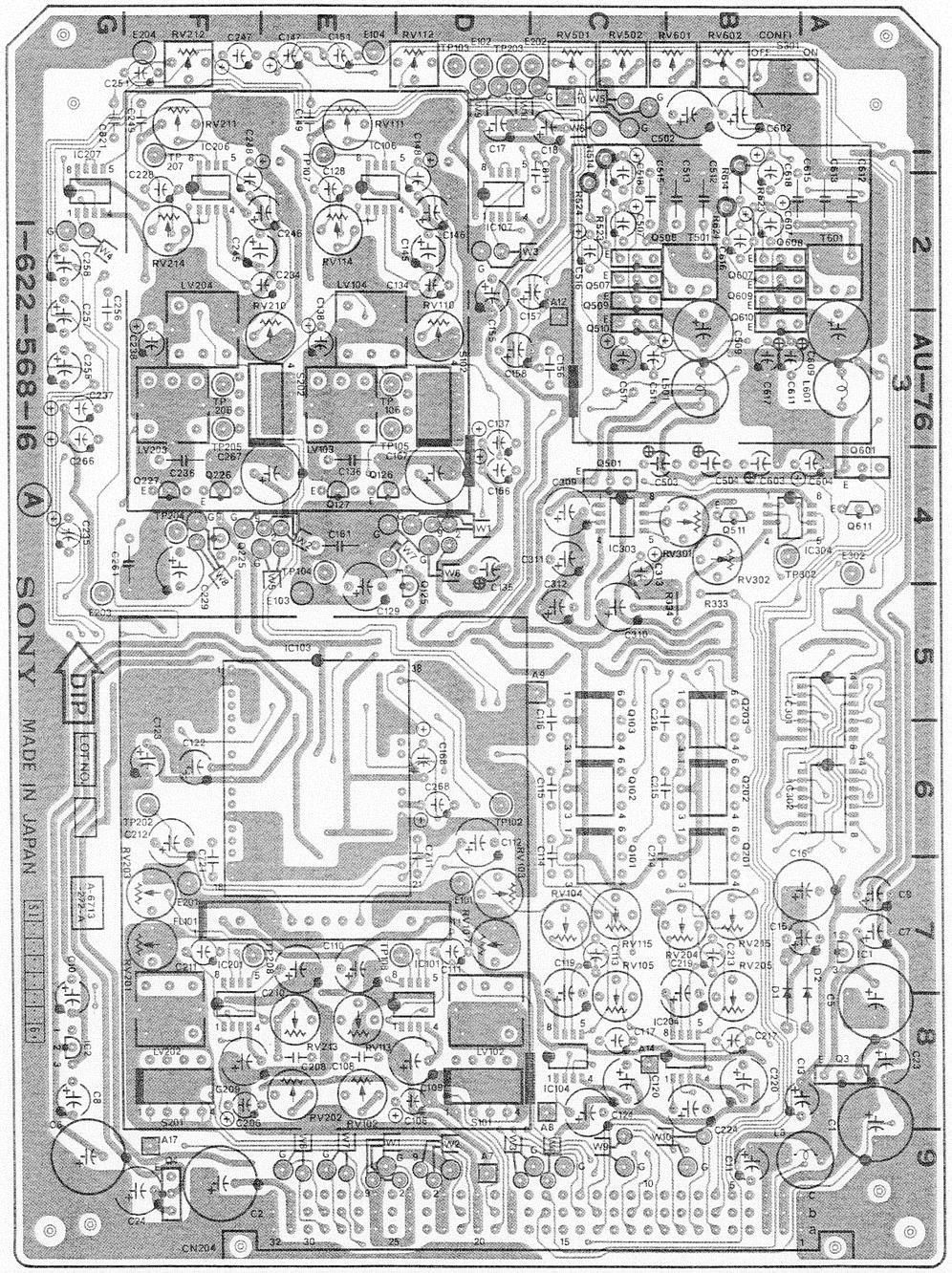

AU-76PC 1-622-568-16 A SIDE

A Side is the same as Component Side.

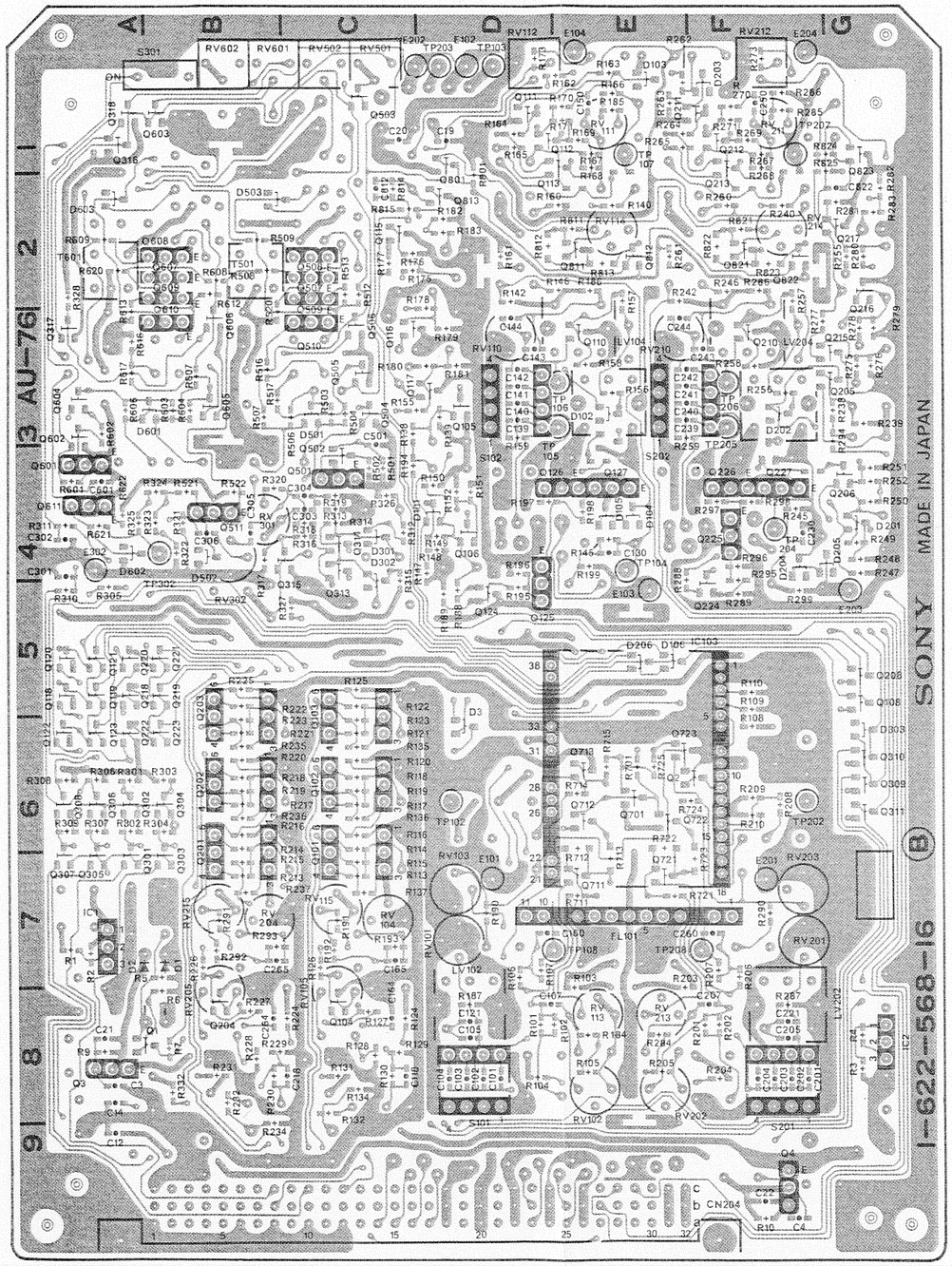

AU-76PC 1-622-568-16 B SIDE

B Side is the same as Solder Side.

AFM-1; AFM AUDIO MODULATOR/DEMODULATOR

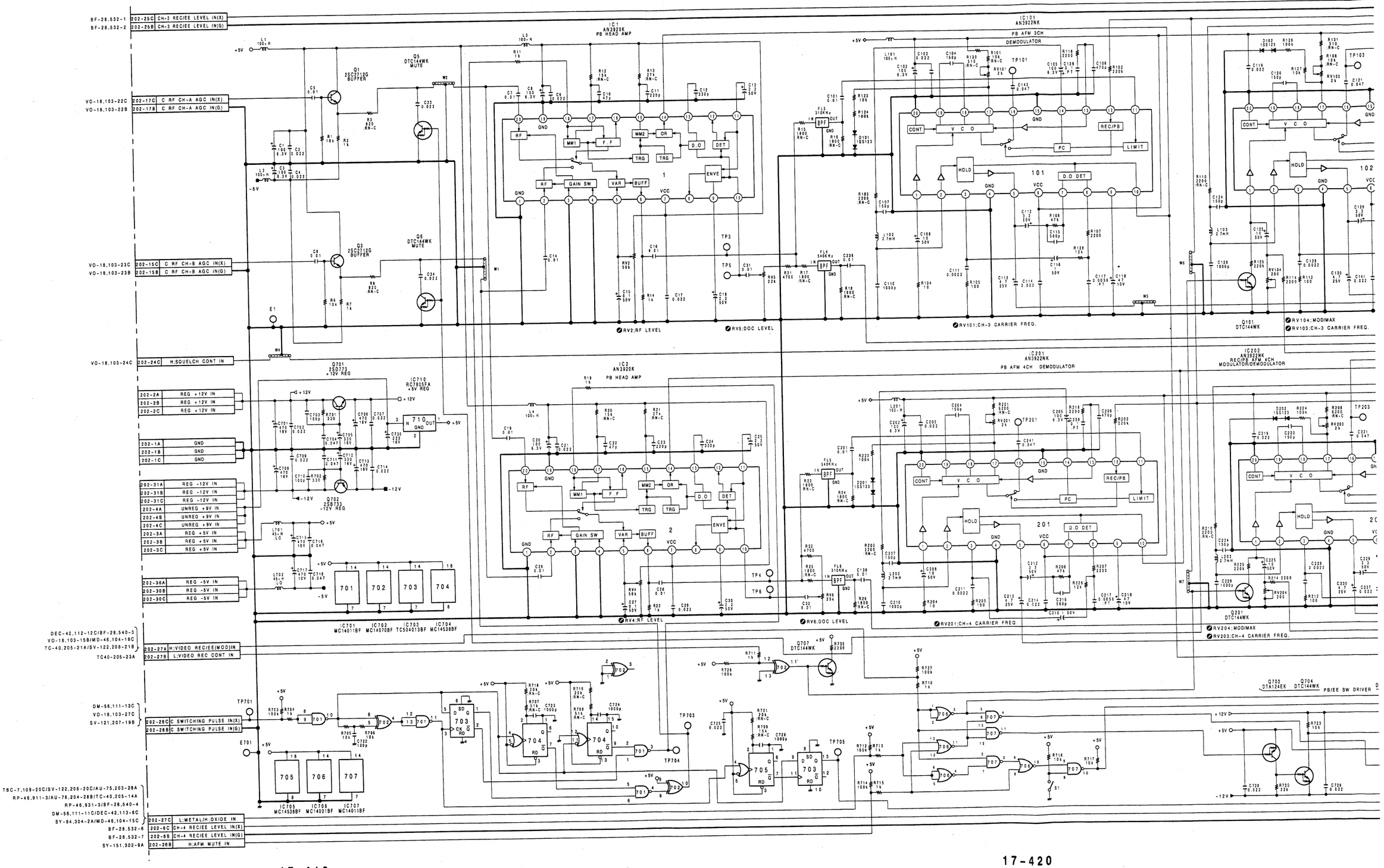

CH-3 PB OUT(X)	202-21C	BF-28,532-3
CH-3 PB OUT(G)	202-21B	NC
CH-3 LINE OUT(X)	202-23C	BF-28,540-10/CP-161,409-4
CH-3 LINE OUT(G)	202-23B	BF-28,540-9/CP-161,409-3
CH-3 PB LEVEL IN(X)	202-22C	BF-28,532-4
CH-3 PB LEVEL IN(G)	202-22B	BF-28,532-5

GND	202-8A
GND	202-8A
GND	202-9A
GND	202-10A
GND	202-15A
GND	202-16A
GND	202-17A
GND	202-21A
GND	202-22A
GND	202-23A
GND	202-25A
GND	202-26A
GND	202-28A
GND	202-29A
GND	202-29B

AFM REC RF OUT(X)	202-16C	RP-46,931-5
AFM REC RF OUT(G)	202-16B	RP-46,931-6

CH-4 PB OUT(X)	202-8C	BF-28,532-8
CH-4 PB OUT(G)	202-8B	NC
CH-4 LINE OUT(X)	202-10C	BF-28,540-12/CP-161,409-2
CH-4 LINE OUT(G)	202-10B	BF-28,540-11/CP-161,409-1
CH-4 PB LEVEL IN(X)	202-9C	BF-28,532-9
CH-4 PB LEVEL IN(G)	202-9B	BF-28,532-10

AFM-1 BOARD
BOARD NO.1-622-569-13
BVW-85P(EK) ;#10001-

17-421

17-422

AFM-1; AFM AUDIO MODULATOR/DEMODULATOR

AFM-1(1-622-569-13)
BVW-85P

CN202	C-7	Q302	C-4	TP402	D-5
		Q303	C-6	TP403	E-5
*D101	E-1	Q304	C-6	TP404	E-6
*D102	E-3	Q401	E-4	TP501	C-4
*D201	B-1	Q402	E-4	TP502	D-5
*D202	A-4	Q403	E-5	TP701	B-6
D301	B-5	Q404	E-6	TP703	A-1
D302	B-5	*Q601	D-3	TP704	B-1
D401	E-4	*Q602	D-2	TP705	A-5
D402	E-4	*Q603	D-3		
D501	D-4	*Q604	C-2		
D502	D-4	*Q605	C-3		
*D901	C-2	*Q606	C-2		
*D902	C-2	*Q607	B-3		
		*Q608	C-2		
E1	E-6	Q701	E-7		
E301	C-5	Q702	A-7		
E401	E-5	*Q703	A-5		
E501	D-5	*Q704	A-4		
E701	B-5	*Q705	A-5		
		*Q706	A-4		
FL3	E-1	*Q707	B-5		
FL4	B-1	*Q901	C-2		
FL5	A-1	*Q902	C-2		
FL6	E-1	*Q903	C-2		
FL7	D-2	*Q904	D-2		
FL8	B-2				
FL9	D-4	RV2	D-2		
		RV4	C-2		
IC1	D-1	RV5	D-1		
IC2	C-1	RV6	B-1		
IC101	E-1	RV101	E-2		
IC102	E-3	RV102	C-3		
IC103	B-4	RV103	D-2		
IC104	C-4	RV104	E-4		
IC201	A-2	RV105	B-4		
IC202	A-3	RV201	A-2		
IC301	B-5	RV202	C-4		
IC303	C-5	RV203	A-3		
IC304	B-6	RV204	A-4		
IC401	E-4	RV205	B-4		
IC403	E-5	RV501	C-3		
IC404	E-6	RV502	D-3		
IC501	C-5	RV602	C-3		
IC502	D-3	RV603	C-3		
IC701	B-6				
IC702	A-6	S1	B-1		
IC703	B-5				
IC704	B-6	TP3	D-1		
IC705	A-5	TP4	B-1		
IC706	A-6	TP5	D-1		
IC707	A-5	TP6	B-2		
IC710	E-4	TP101	E-1		
		TP103	D-2		
*Q1	C-7	TP201	B-1		
*Q3	D-7	TP203	B-3		
*Q5	C-7	TP301	B-5		
*Q6	D-7	TP302	D-5		
*Q101	E-4	TP303	B-5		
*Q201	A-4	TP304	B-6		
Q301	C-5	TP401	E-4		

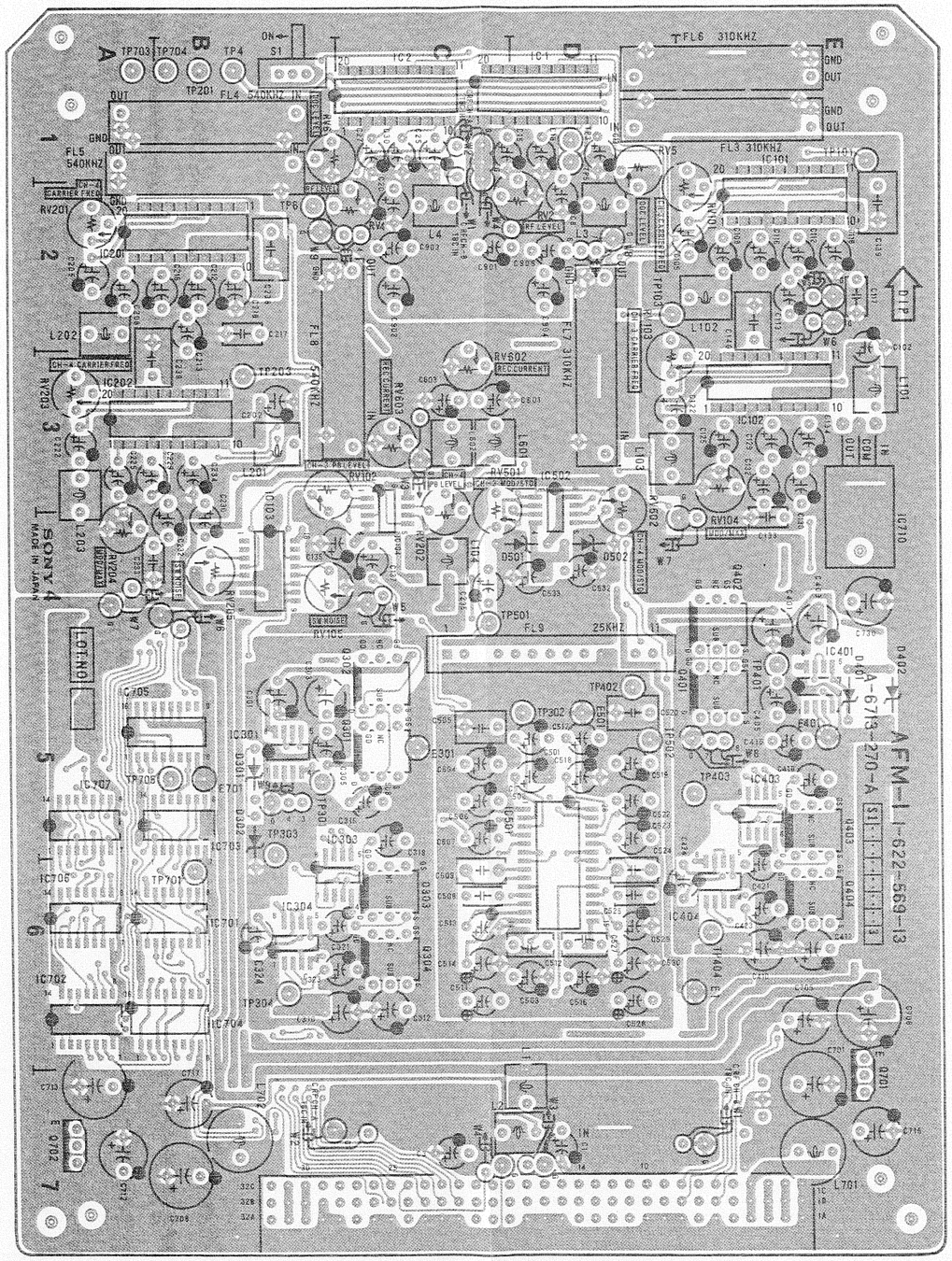

AFM-1 1-622-569-13 COMPONENT SIDE

* : SOLDERING SIDE

AFM-1; AFM AUDIO MODULATOR/DEMODULATOR

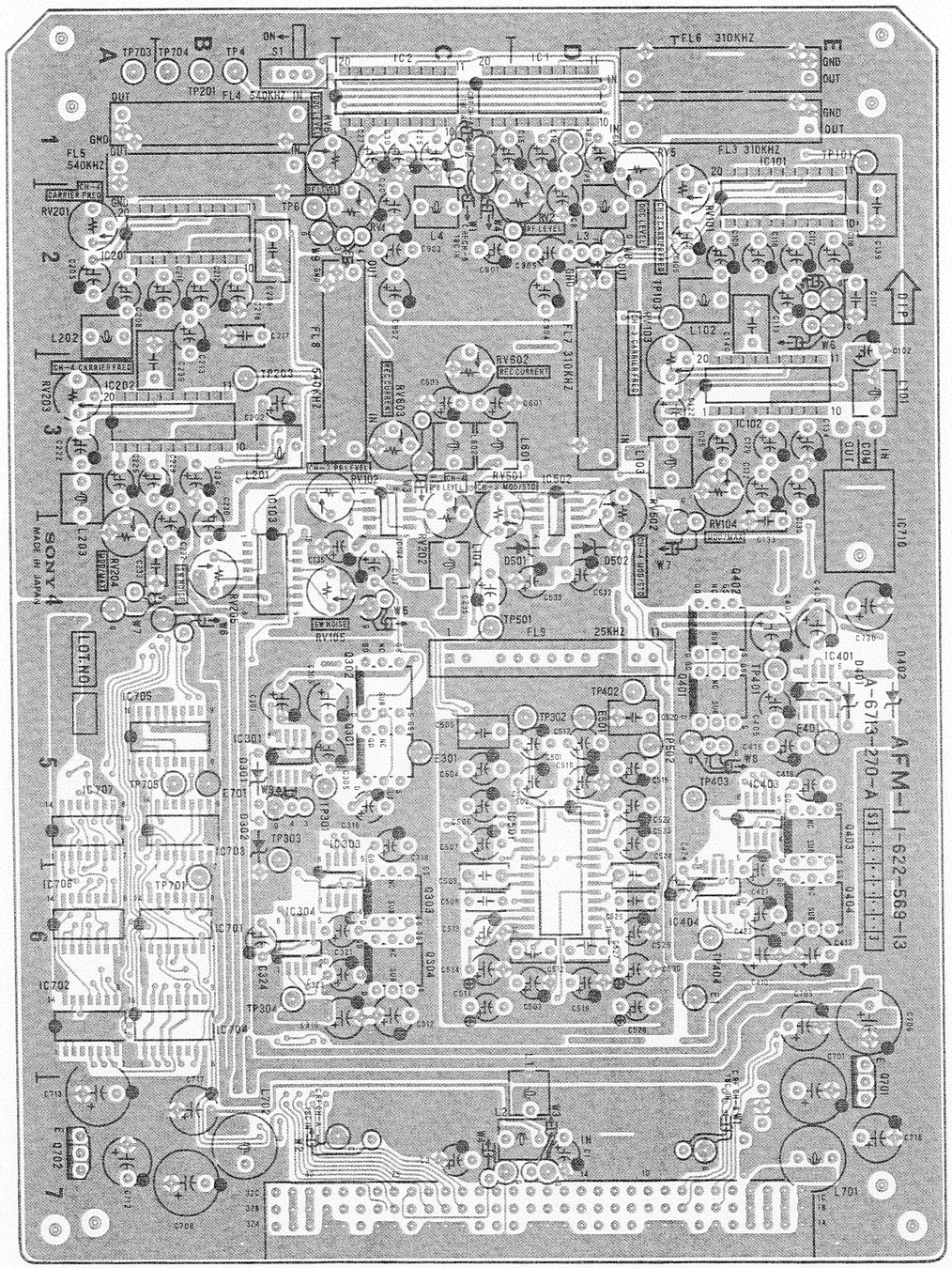

AFM-1 1-622-569-13 COMPONENT SIDE

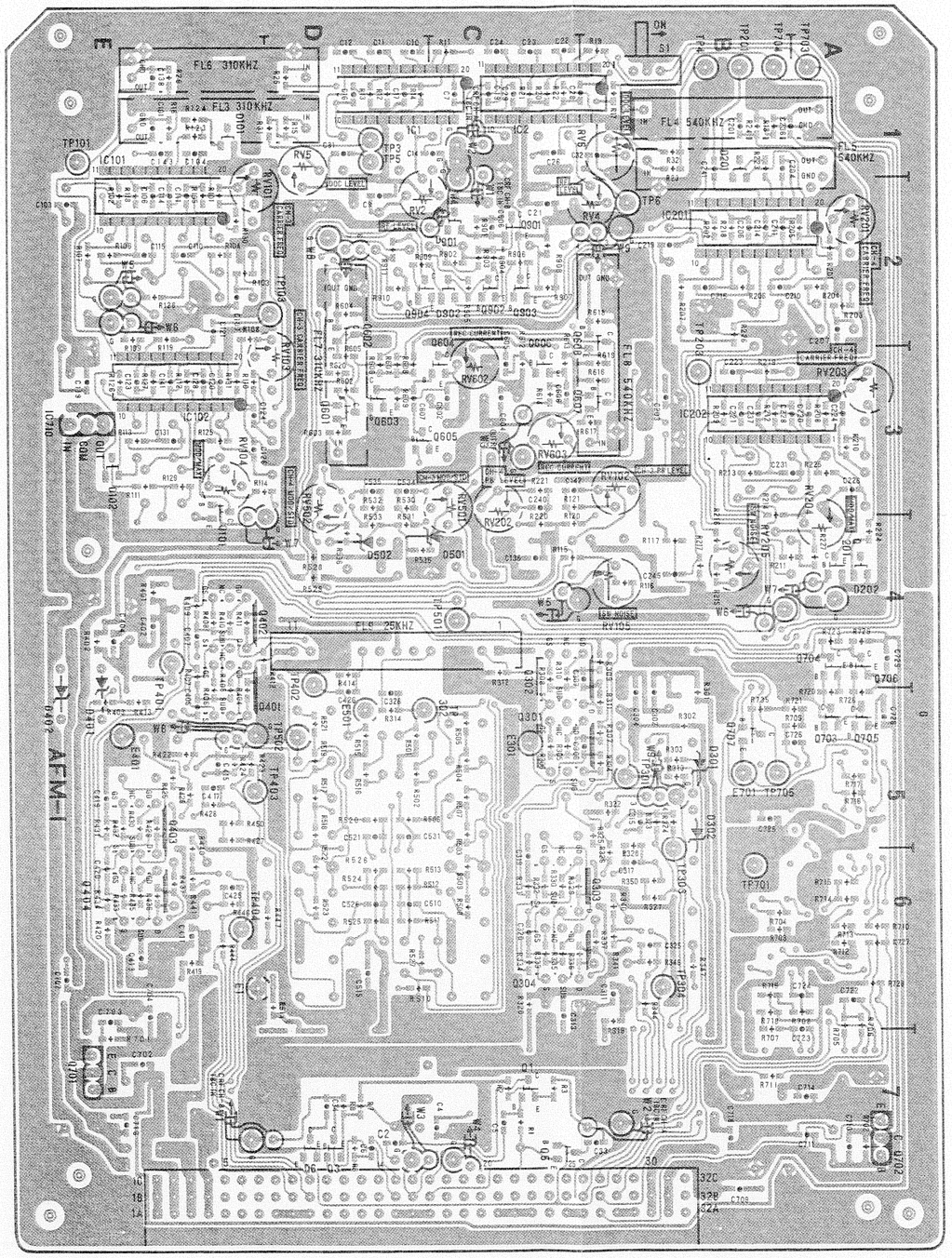

AFM-1 1-622-569-13 SOLDER SIDE

CP-154; DIGITAL AUDIO MONITOR INPUT BUFFER

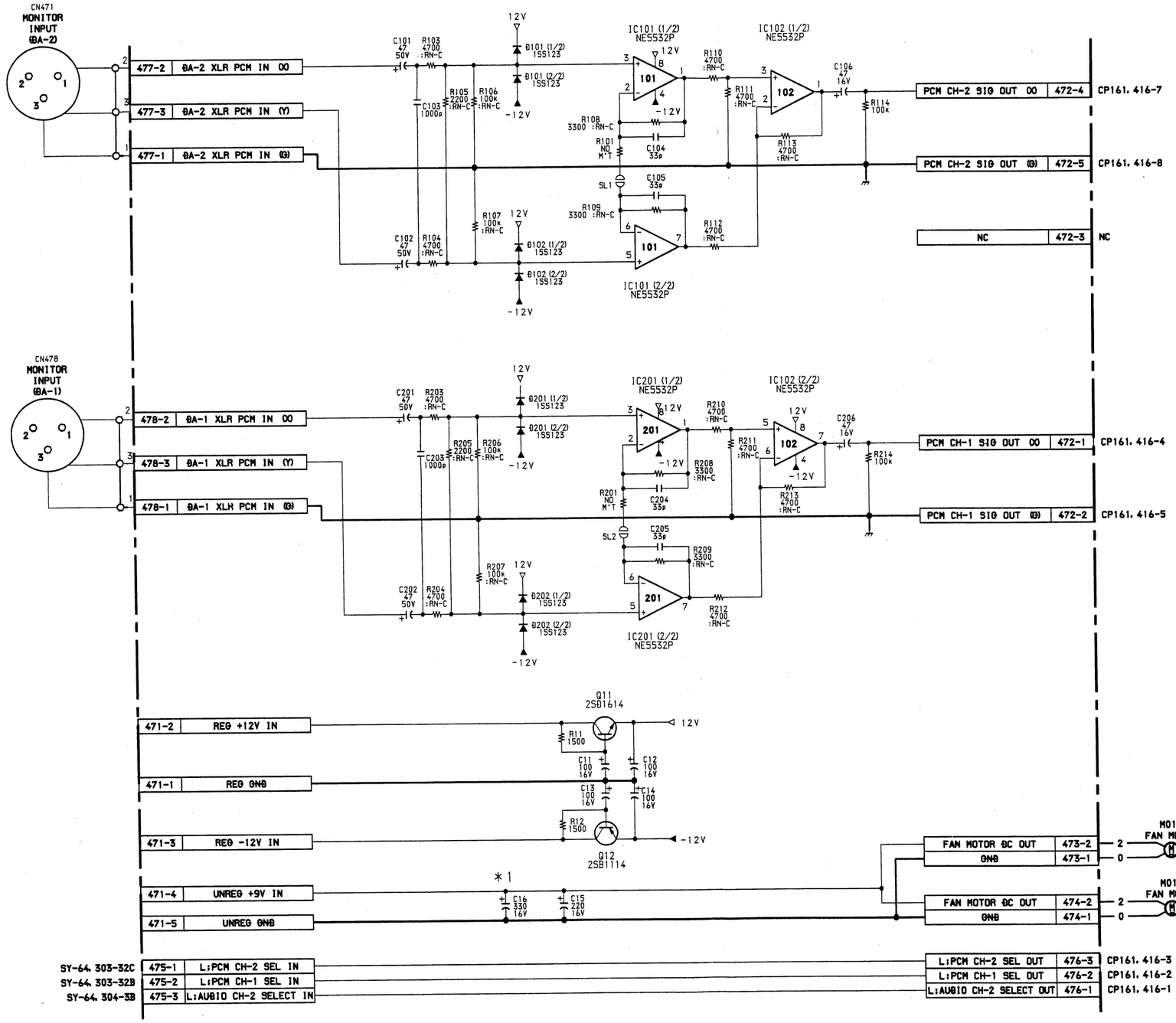

NOTE:

ADDRESS	MARK	CHANGE INFORMATION	SERIAL NO.
D5	*1	C16 ADDED:330μF 16V	#10034-

CP-154 BOARD
BOARD NO.1-635-403-11,12
BVW-85P(EK) ;#10001-

CP-154; DIGITAL AUDIO MONITOR INPUT BUFFER

S/N;10001 through 10033

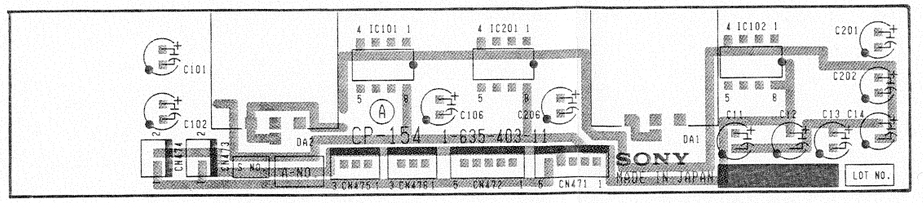

CP-154 1-635-403-11 A SIDE

A Side is the same as Component Side.

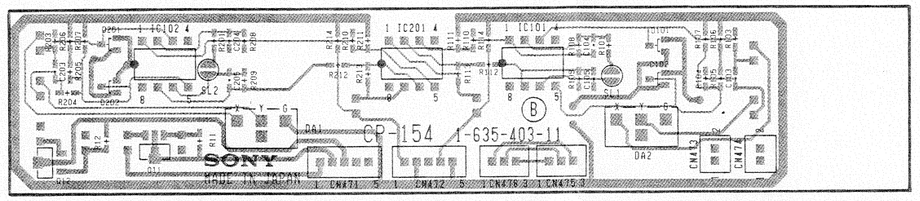

CP-154 1-635-403-11 B SIDE

B Side is the same as Solder Side.

S/N;10034 and higher

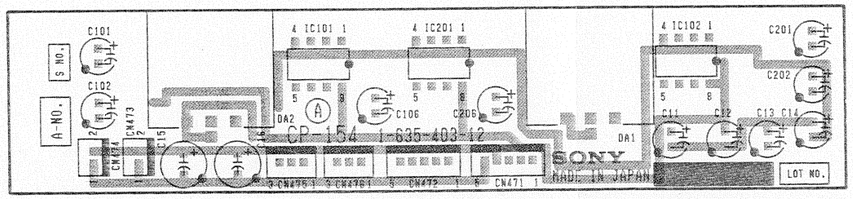

CP-154 1-635-403-12 A SIDE

A Side is the same as Component Side.

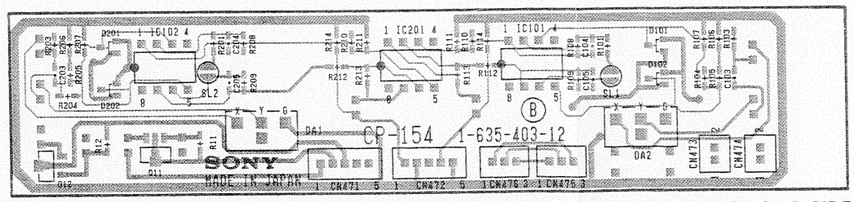

CP-154 1-635-403-12 B SIDE

B Side is the same as Solder Side.

CP-161(1/4); AUDIO OUTPUT AMPLIFIER/DRIVER

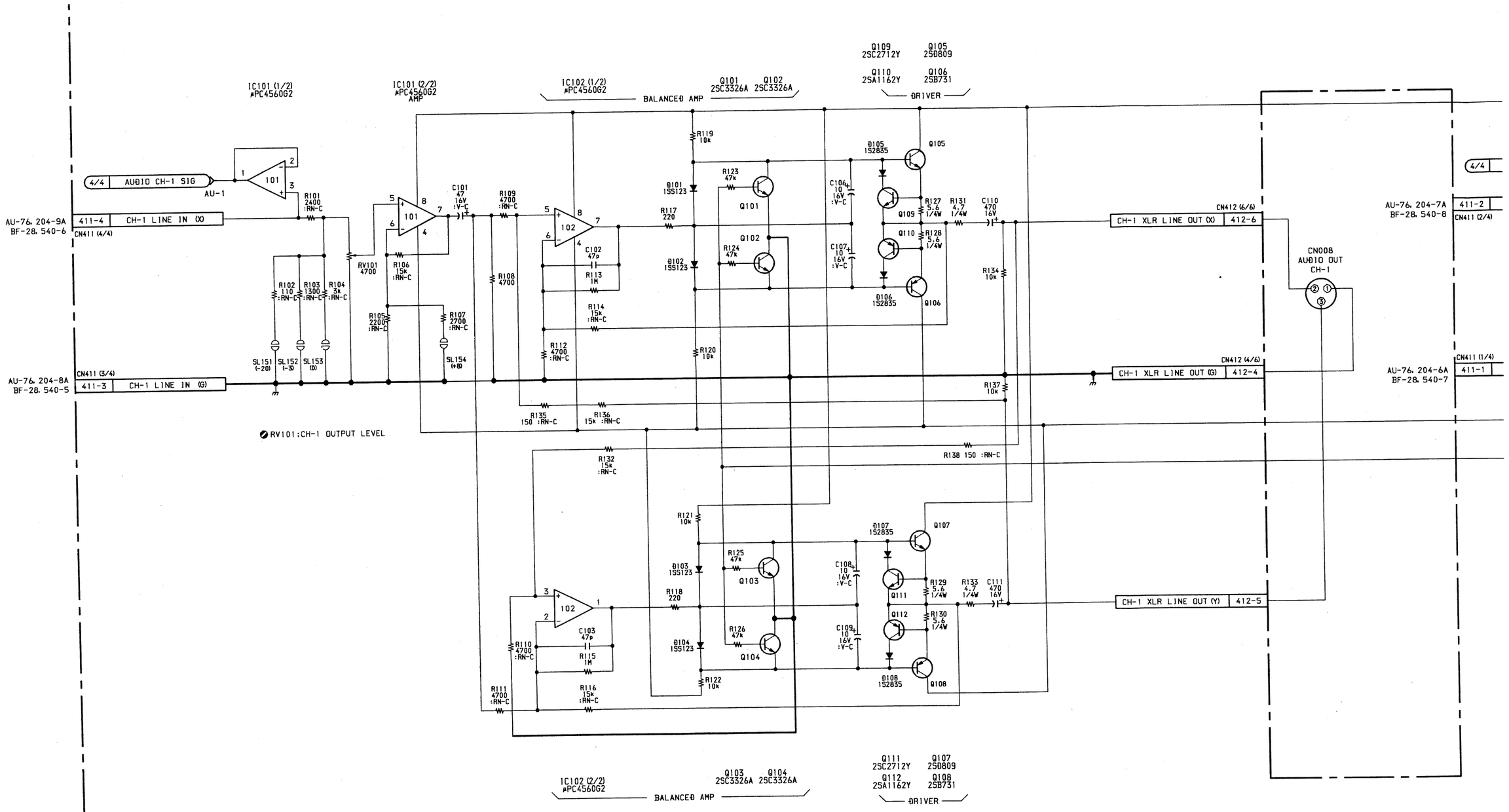

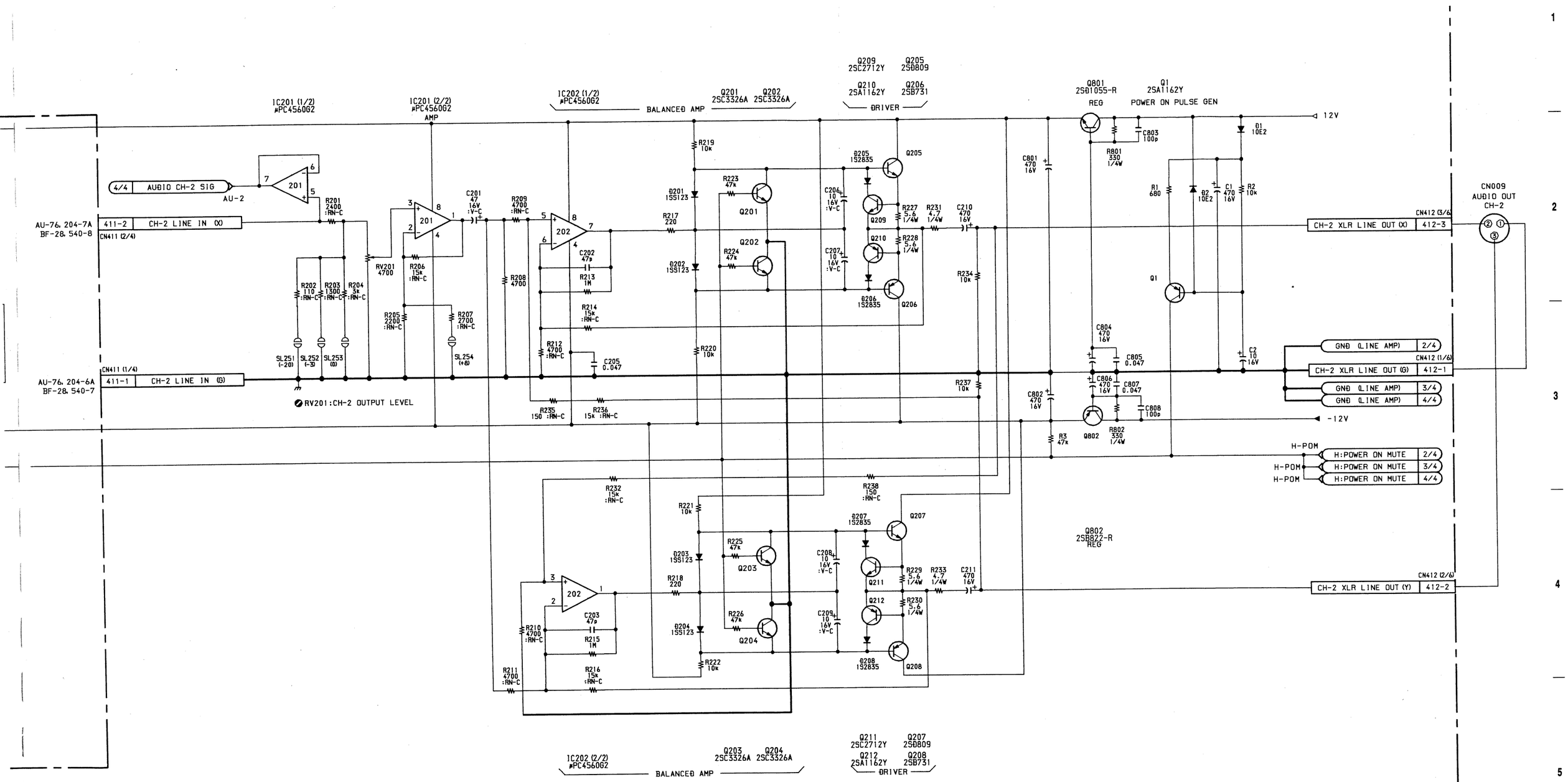

CP-161 BOARD (1/4)

BOARD NO.1-635-401-11,12
BVW-85P(EK) ;#10001-

CP-161(2/4); AUDIO OUTPUT AMPLIFIER/DRIVER

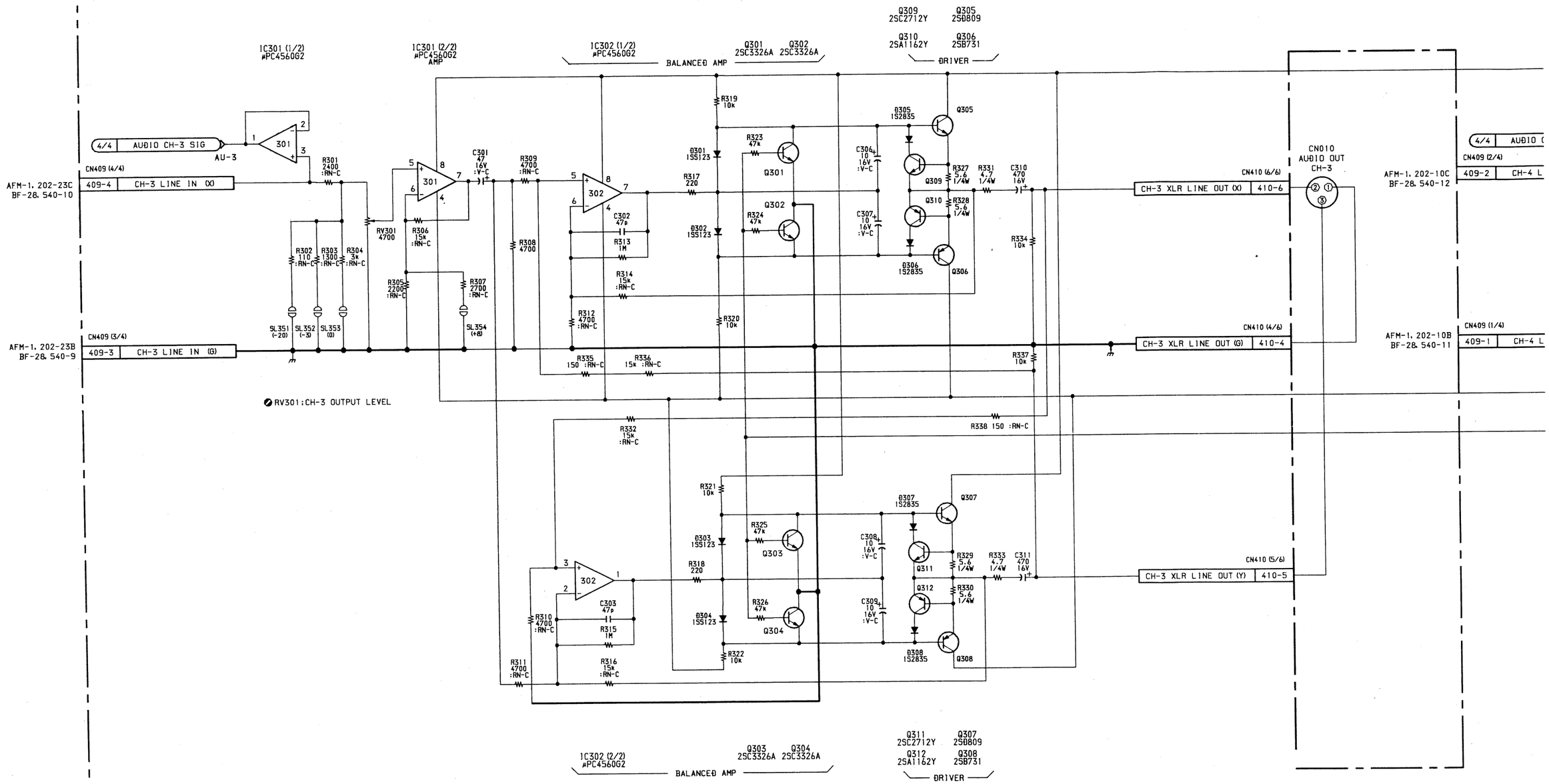

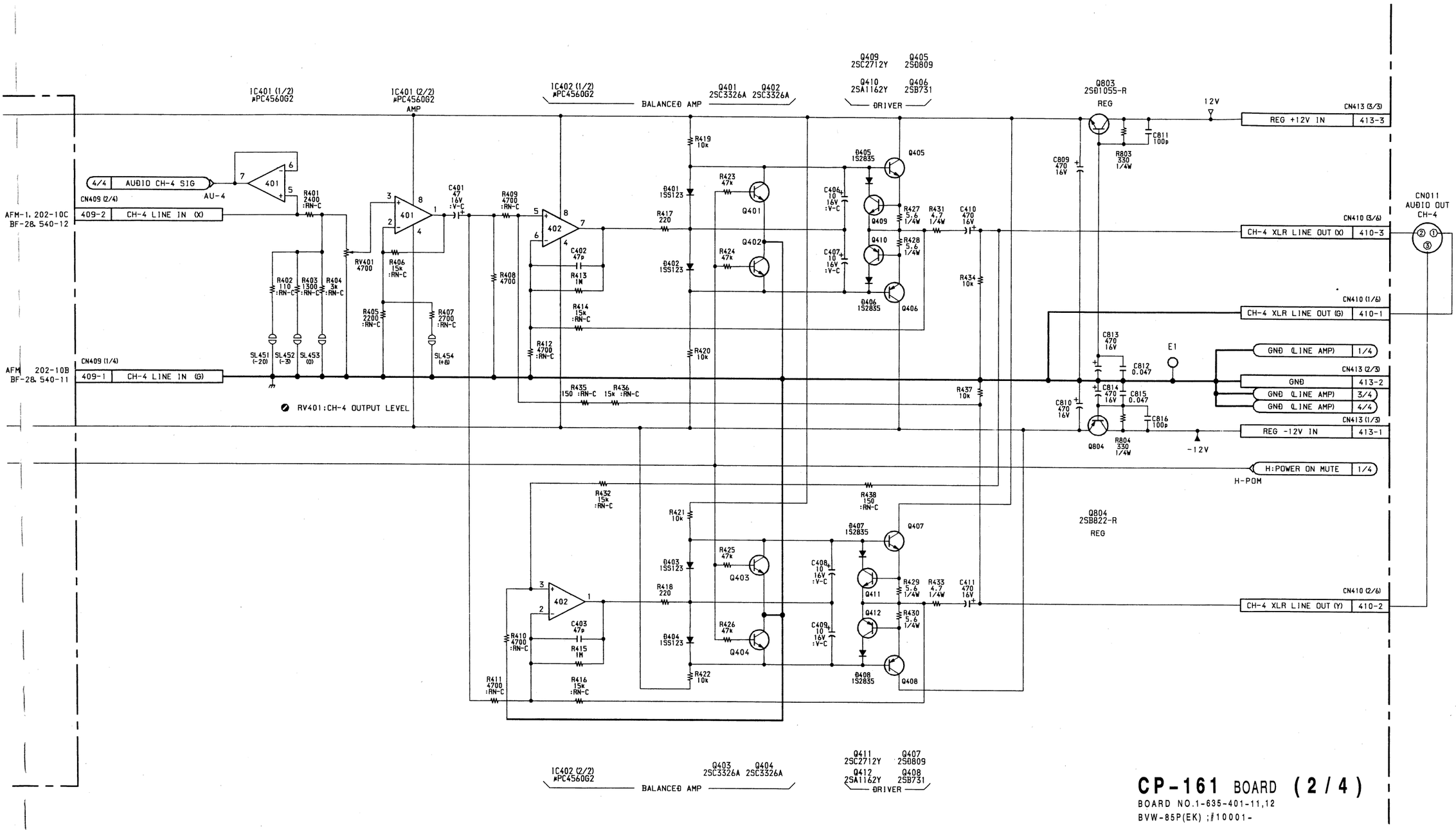

CP-161 BOARD (2/4)

BOARD NO.1-635-401-11,12
BVW-85P(EK) ;#10001-

17-451 17-452

I J K L M N O

1 2 3 4 5

CP-161(3/4); AUDIO OUTPUT AMPLIFIER/DRIVER

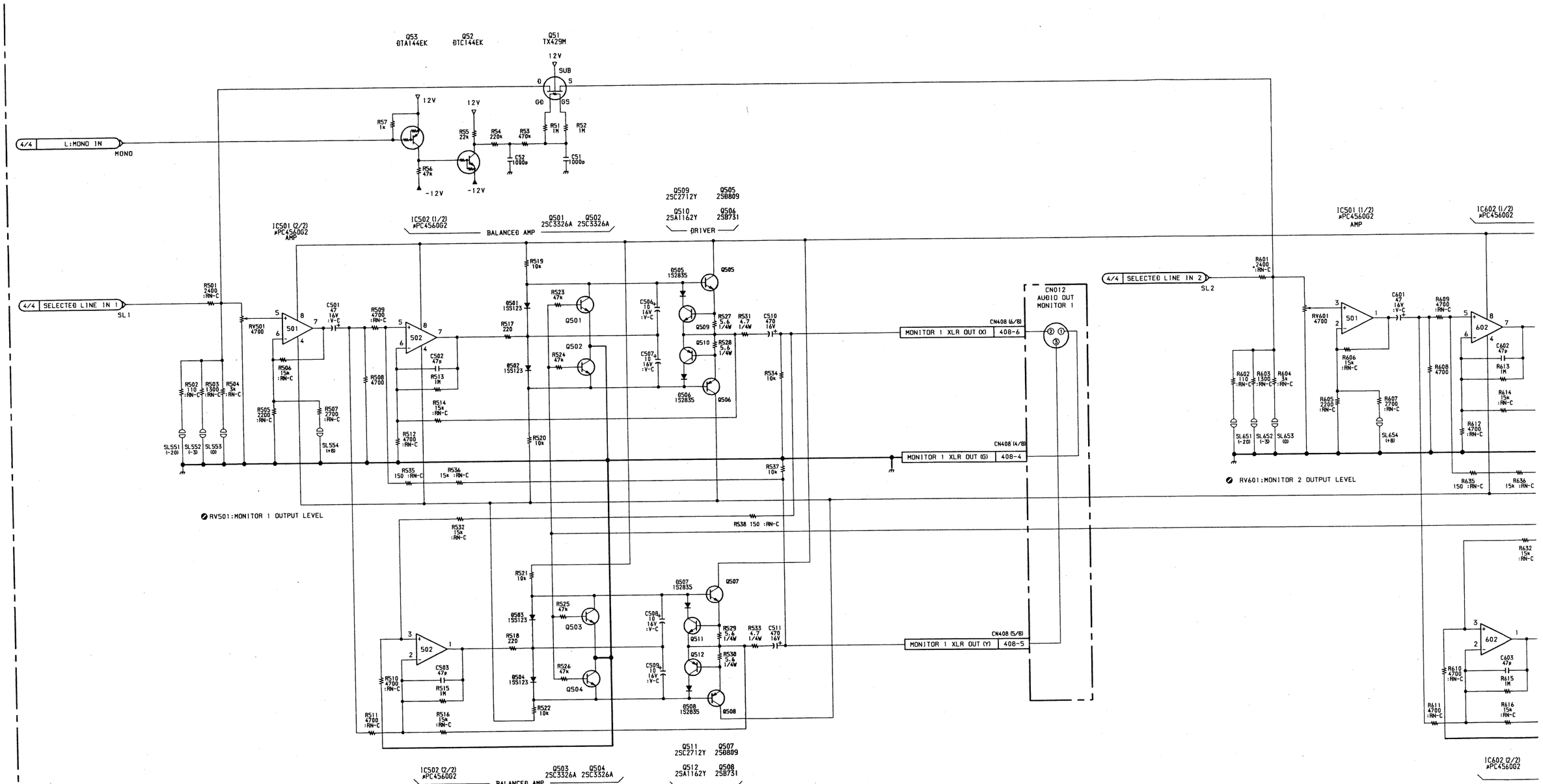

CP-161(3/4)

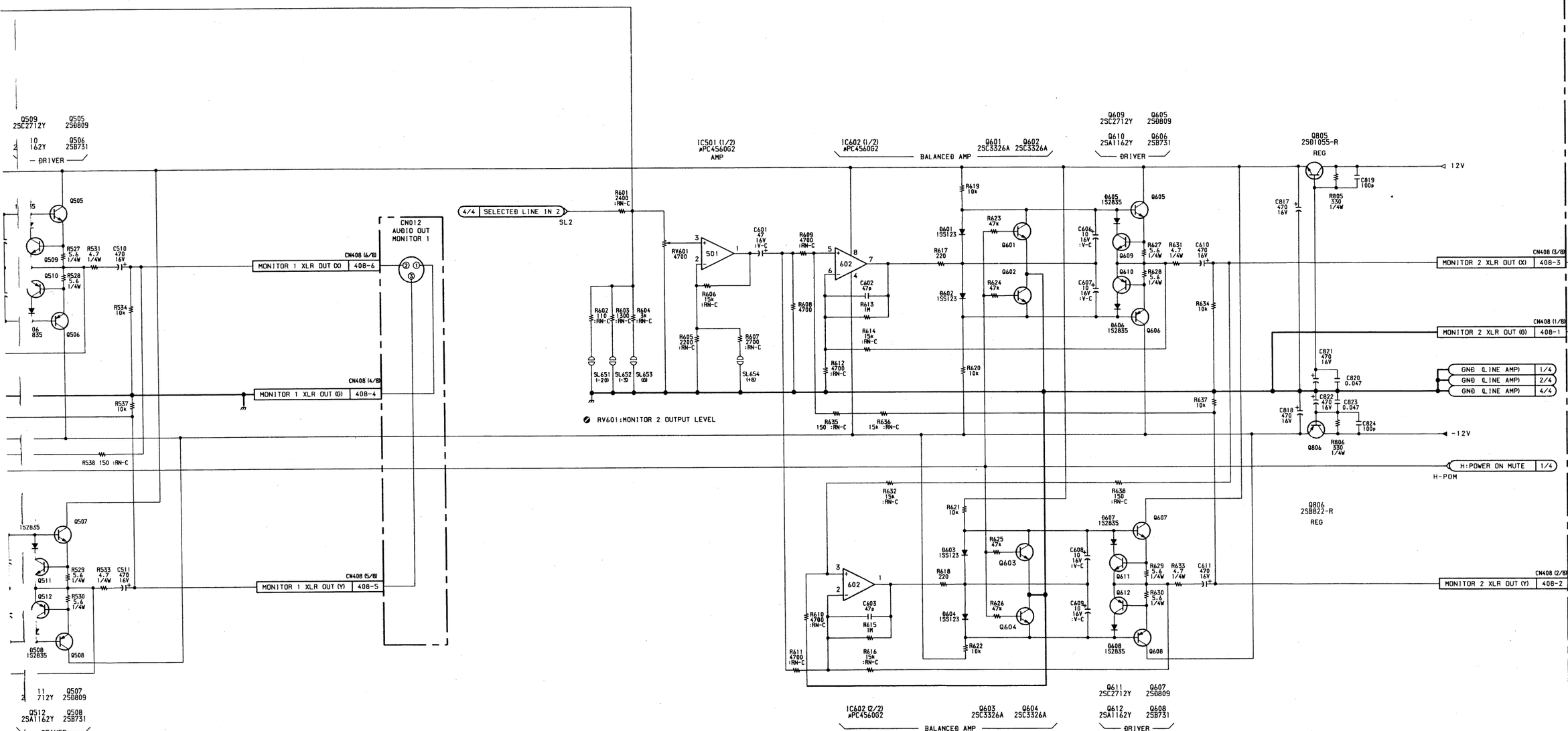

CP-161 BOARD (3/4)

BOARD NO.1-635-401-11,12
BVW-85P(EK) ;#10001-

CP-161(4/4); AUDIO OUTPUT BALANCED AMPLIFIER/DRIVER
HP-33; HEADPHONES AMPLIFIER/JACK
VR-62; HEADPHONES LEVEL VOLUME

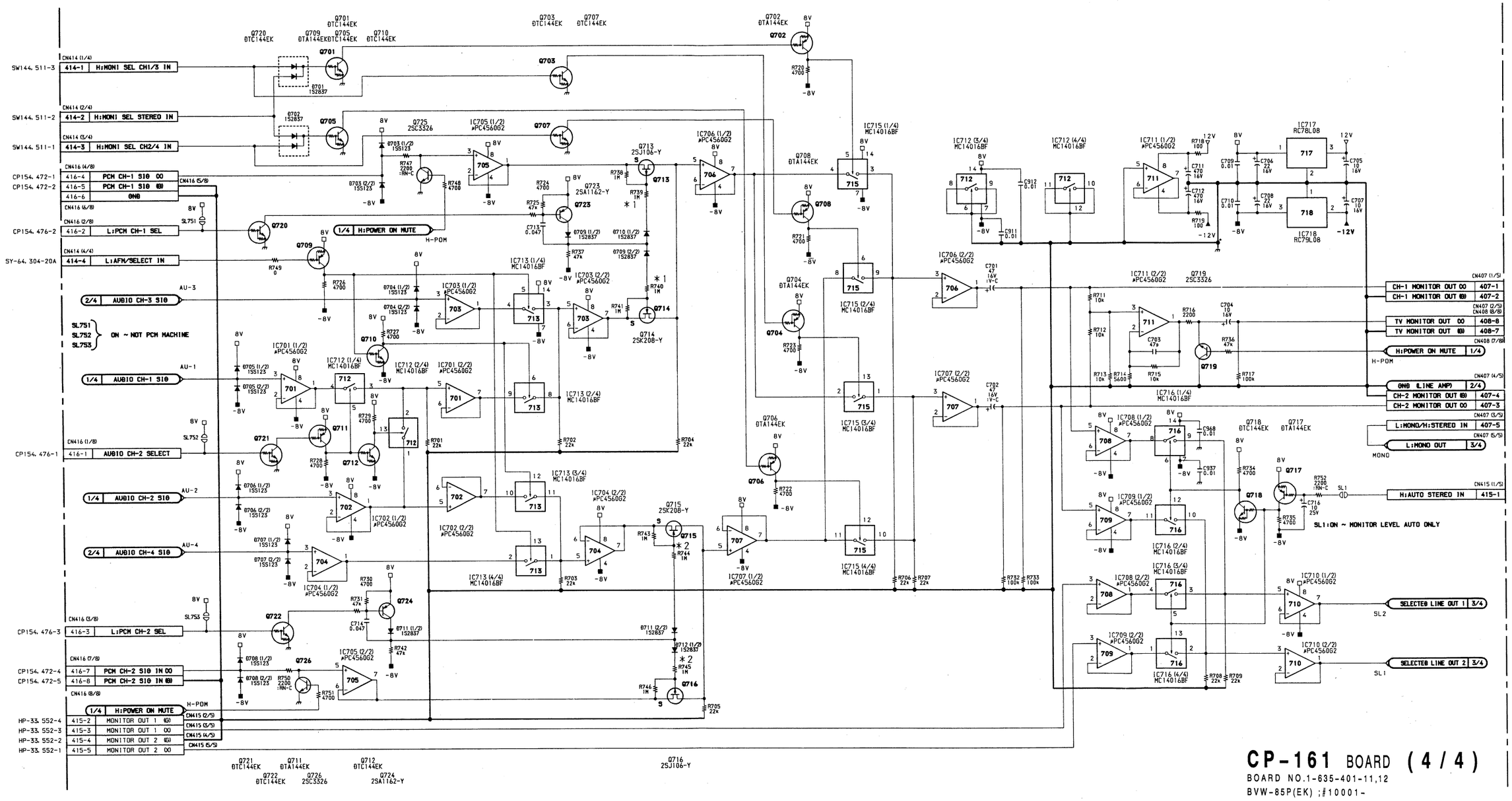

CP-161 BOARD (4/4)

BOARD NO.1-635-401-11,12
BVW-85P(EK) ;#10001-

NOTE:

ADDRESS	MARK	CHANGE INFORMATION	SERIAL NO.
D2,D3	*1	R739:1M TO 470K,R740:1M TO 470K	#10001-10033
D4,D5	*2	R744:1M TO 470K,R745:1M TO 470K	#10001-10033

CN407 (1/5)
CH-1 MONITOR OUT CO | 407-1 | BF-28, 541-3
CH-1 MONITOR OUT GD | 407-2 | BF-28, 541-4
CN407 (2/5) CN408 (6/8)
TV MONITOR OUT CO | 408-6 | CN014-1, MONITOR OUT
TV MONITOR OUT GD | 408-7 | CN014-5, MONITOR OUT
CN408 (7/8)
H:POWER ON MUTE | 1/4
CN407 (4/5)
GND (LINE AMP) | 2/4
CH-2 MONITOR OUT GD | 407-4 | BF-28, 541-2
CH-2 MONITOR OUT CO | 407-3 | BF-28, 541-1
CN407 (5/5)
L:MONO/H:STEREO IN | 407-5 | NC
CN407 (5/5)
L:MONO OUT | 3/4
MONO
CN415 (1/5)
H:AUTO STEREO IN | 415-1 | SW144, 511-8/SY-64, 304-22B/CP103, 501-25
TOR LEVEL AUTO ONLY
SELECTED LINE OUT 1 | 3/4
SELECTED LINE OUT 2 | 3/4
(4/4)

RV541 20K/20K
HEADPHONES LEVEL
VR-62

553-1 GND
553-2 SELE 2 VARIABLE
553-3 SELE 1 VARIABLE
553-4 SELE 2 IN
553-5 SELE 1 IN
BF-28,534-4 551-7 SELECTED IN 2 (X)
BF-28,534-5 551-6 SELECTED IN 2 (G)
BF-28,534-6 551-5 SELECTED IN 1 (X)
BF-28,534-7 551-4 SELECTED IN 1 (G)
BF-28,534-1 551-3 REG +12V IN
BF-28,543-3 551-1 GND
BF-28,534-2 551-2 REG -12V IN

IC2 NE5532P
+12V
-12V
(2/2)
(1/2)
JW1
JW2
R1 100
R2 100k
R3 100
R4 100k
C2 47 16V
C3 47 16V
R6 100 1/2W
R7 820 :RN
R8 12k :RN
R9 150
R10 100 1/2W
R12 820 :RN
R13 12k :RN
R14 150
C4 100 16V
C5 100 16V
C1 0.1 :PT
J1
IC1 RC4558D

MONITOR VR2 OUT(X) 552-1 CP-161,415-5
MONITOR VR2 OUT(G) 552-2 CP-161,415-4
MONITOR VR1 OUT(X) 552-3 CP-161,415-3
MONITOR VR1 OUT(G) 552-4 CP-161,415-2

HP-33 BOARD
BOARD NO.1-622-590-13
BVW-85P(EK) ;#10001-

S/N;10001 through 10033

CP-161(1-635-401-11)

BVW-85P

CN407	E-3	*D701	C-4	*Q202	B-1	*Q703	C-4
CN408	F-4	*D702	D-4	*Q203	B-1	*Q704	C-4
CN409	D-1	*D703	B-3	*Q204	B-1	*Q705	D-4
CN410	D-4	*D704	B-3	Q205	B-2	*Q706	D-4
CN411	B-1	*D705	A-3	Q206	B-2	*Q707	D-4
CN412	B-4	*D706	B-3	Q207	B-2	*Q708	D-4
CN413	D-2	*D707	C-3	Q208	B-2	*Q709	B-4
CN414	B-4	*D708	A-3	*Q209	B-2	*Q710	C-4
CN415	F-3	*D709	C-4	*Q210	B-2	*Q711	A-4
CN416	A-4	*D710	C-3	*Q211	B-2	*Q712	A-4
		*D711	C-4	*Q212	B-2	Q713	C-4
D1	B-2	*D712	C-3	*Q301	C-1	Q714	C-3
D2	B-2			*Q302	C-1	Q715	C-3
*D101	A-1	E1	D-2	*Q303	C-1	Q716	C-4
*D102	A-1			*Q304	C-1	*Q717	F-3
*D103	A-1	IC101	A-1	Q305	C-2	*Q718	F-3
*D104	A-1	IC102	A-1	Q306	C-2	*Q719	E-3
*D105	A-2	IC201	B-1	Q307	C-2	*Q720	C-4
*D106	A-2	IC202	B-1	Q308	C-2	*Q721	A-4
*D107	A-2	IC301	C-1	*Q309	C-2	*Q722	C-4
*D108	A-2	IC302	C-1	*Q310	C-2	*Q723	C-4
*D201	B-1	IC401	D-1	*Q311	C-2	*Q724	C-4
*D202	B-1	IC402	D-1	*Q312	C-2	*Q725	B-4
*D203	B-1	IC501	F-1	*Q401	D-1	*Q726	A-3
*D204	B-1	IC502	E-1	*Q402	D-1	*Q801	A-2
*D205	B-2	IC602	F-1	*Q403	D-1	*Q802	A-2
*D206	B-2	IC701	A-3	*Q404	D-1	*Q803	C-2
*D207	B-2	IC702	A-3	Q405	D-2	*Q804	C-2
*D208	B-2	IC703	B-3	Q406	D-2	*Q805	E-2
*D301	C-1	IC704	C-3	Q407	D-2	*Q806	E-2
*D302	C-1	IC705	A-3	Q408	D-2		
*D303	C-1	IC706	C-3	*Q409	D-2	RV101	A-1
*D304	C-1	IC707	C-3	*Q410	D-2	RV201	B-1
*D305	C-2	IC708	E-3	*Q411	D-2	RV301	C-1
*D306	C-2	IC709	E-3	*Q412	D-2	RV401	D-1
*D307	C-2	IC710	F-3	*Q501	E-1	RV501	E-1
*D308	C-2	IC711	E-3	*Q502	E-1	RV601	F-1
*D401	D-1	IC712	A-3	*Q503	E-1		
*D402	D-1	IC713	B-3	*Q504	E-1		
*D403	D-1	IC715	D-3	Q505	E-2		
*D404	D-1	IC716	F-3	Q506	E-2		
*D405	D-2	IC717	E-4	Q507	E-2		
*D406	D-2	IC718	F-4	Q508	E-2		
*D407	D-2			*Q509	E-2		
*D408	D-2	*Q1	B-2	*Q510	E-2		
*D501	E-1	*Q51	E-1	*Q511	E-2		
*D502	E-1	*Q52	F-1	*Q512	E-2		
*D503	E-1	*Q53	D-1	*Q601	F-1		
*D504	E-1	*Q101	A-1	*Q602	F-1		
*D505	E-2	*Q102	A-1	*Q603	F-1		
*D506	E-2	*Q103	A-1	*Q604	F-1		
*D507	E-2	*Q104	A-1	Q605	F-2		
*D508	E-2	Q105	A-2	Q606	F-2		
*D601	F-1	Q106	A-2	Q607	F-2		
*D602	F-1	Q107	A-2	Q608	F-2		
*D603	F-1	Q108	A-2	*Q609	F-2		
*D604	F-1	*Q109	A-2	*Q610	F-2		
*D605	F-2	*Q110	A-2	*Q611	F-2		
*D606	F-2	*Q111	A-2	*Q612	F-2		
*D607	F-2	*Q112	A-2	*Q701	D-4		
*D608	F-2	*Q201	B-1	*Q702	D-4		

*: SOLDERING SIDE

CP-161; AUDIO OUTPUT BALANCED AMPLIFIER/DRIVER
HP-33; HEADPHONES AMPLIFIER/JACK
VR-62; HEADPHONES LEVEL VOLUME

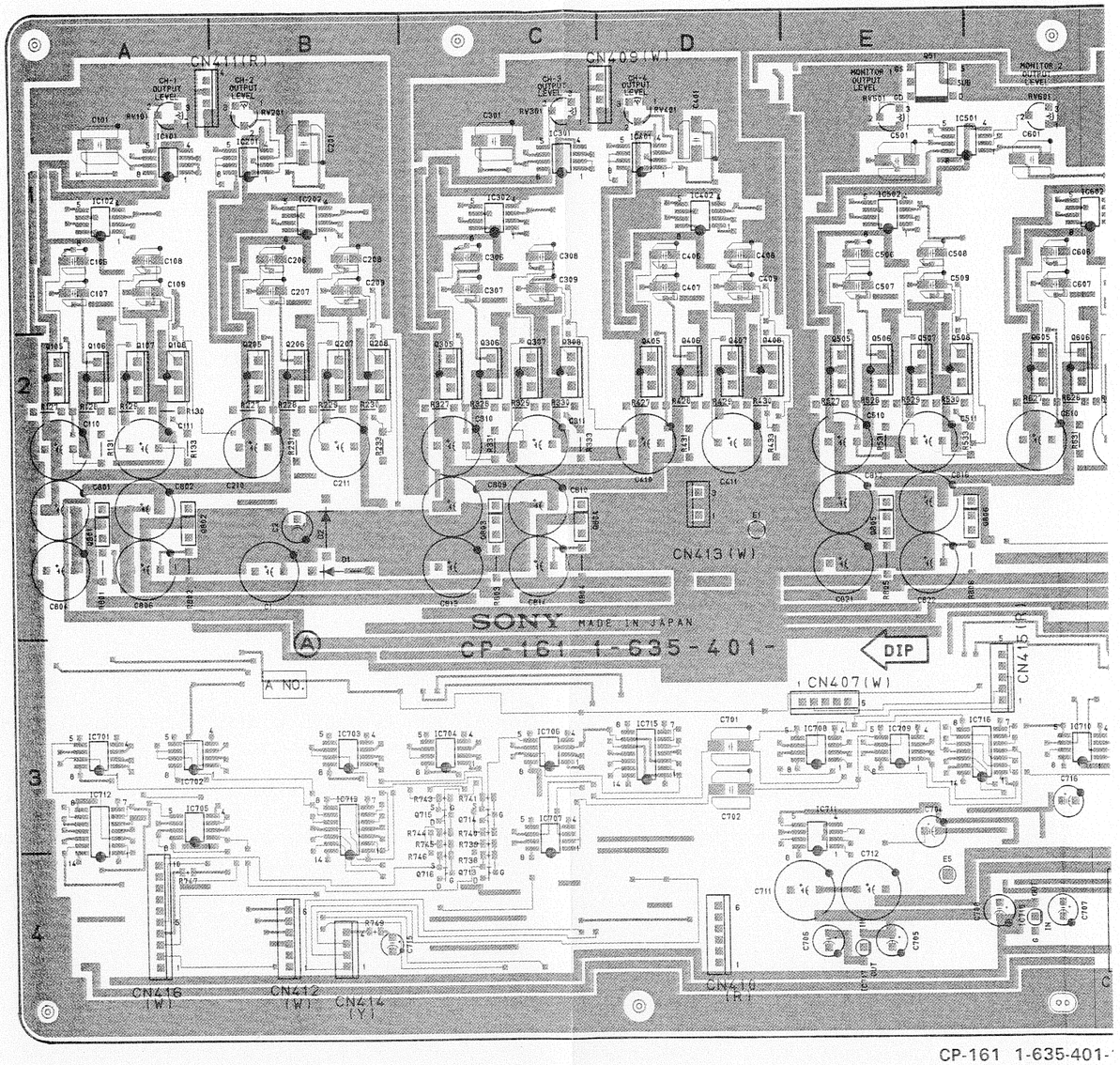

CP-161 1-635-401-

A Side is the same as Componen

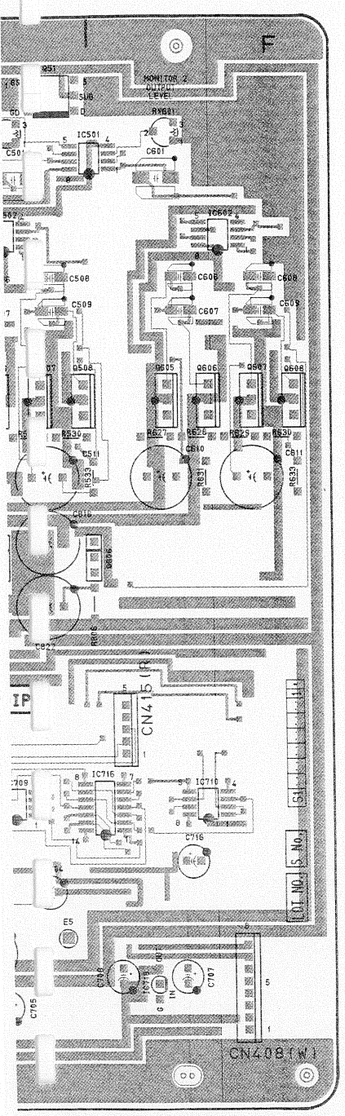
CN408 (W)
CN415 (R)
CN716
IC710
C716
C707
C705
C709
C708
C706
C704
C703
C702
C701
C700
C710
C711
C712
C713
C714
C715
C717
C718
C719
C720
C721
C722
C723
C724
C725
C726
C727
C728
C729
C730
C731
C732
C733
C734
C735
C736
C737
C738
C739
C740
C741
C742
C743
C744
C745
C746
C747
C748
C749
C750
C751
C752
C753
C754
C755
C756

S/N;10034 and higher

CP-161(1-635-401-12)

BVW-85P

CN407	E-3	*D701	C-4	*Q202	B-1	*Q703	C-4
CN408	F-4	*D702	D-4	*Q203	B-1	*Q704	C-4
CN409	D-1	*D703	B-3	*Q204	B-1	*Q705	D-4
CN410	D-4	*D704	B-3	Q205	B-2	*Q706	D-4
CN411	B-1	*D705	A-3	Q206	B-2	*Q707	D-4
CN412	B-4	*D706	B-3	Q207	B-2	*Q708	D-4
CN413	D-2	*D707	C-3	Q208	B-2	*Q709	B-4
CN414	B-4	*D708	A-3	*Q209	B-2	*Q710	C-4
CN415	F-3	*D709	C-4	*Q210	B-2	*Q711	A-4
CN416	A-4	*D710	C-3	*Q211	B-2	*Q712	A-4
		*D711	C-4	*Q212	B-2	Q713	C-4
D1	B-2	*D712	C-3	*Q301	C-1	Q714	C-3
D2	B-2			*Q302	C-1	Q715	C-3
*D101	A-1	E1	D-2	*Q303	C-1	Q716	C-4
*D102	A-1			*Q304	C-1	*Q717	F-3
*D103	A-1	IC101	A-1	Q305	C-2	*Q718	F-3
*D104	A-1	IC102	A-1	Q306	C-2	*Q719	E-3
*D105	A-2	IC201	B-1	Q307	C-2	*Q720	C-4
*D106	A-2	IC202	B-1	Q308	C-2	*Q721	A-4
*D107	A-2	IC301	C-1	*Q309	C-2	*Q722	C-4
*D108	A-2	IC302	C-1	*Q310	C-2	*Q723	C-4
*D201	B-1	IC401	D-1	*Q311	C-2	*Q724	C-4
*D202	B-1	IC402	D-1	*Q312	C-2	*Q725	B-4
*D203	B-1	IC501	F-1	*Q401	D-1	*Q726	A-3
*D204	B-1	IC502	E-1	*Q402	D-1	*Q801	A-2
*D205	B-2	IC602	F-1	*Q403	D-1	*Q802	A-2
*D206	B-2	IC701	A-3	*Q404	D-1	*Q803	C-2
*D207	B-2	IC702	A-3	Q405	D-2	*Q804	C-2
*D208	B-2	IC703	B-3	Q406	D-2	*Q805	E-2
*D301	C-1	IC704	C-3	Q407	D-2	*Q806	E-2
*D302	C-1	IC705	A-3	Q408	D-2		
*D303	C-1	IC706	C-3	*Q409	D-2	RV101	A-1
*D304	C-1	IC707	C-3	*Q410	D-2	RV201	B-1
*D305	C-2	IC708	E-3	*Q411	D-2	RV301	C-1
*D306	C-2	IC709	E-3	*Q412	D-2	RV401	D-1
*D307	C-2	IC710	F-3	*Q501	E-1	RV501	E-1
*D308	C-2	IC711	E-3	*Q502	E-1	RV601	F-1
*D401	D-1	IC712	A-3	*Q503	E-1		
*D402	D-1	IC713	B-3	*Q504	E-1		
*D403	D-1	IC715	D-3	Q505	E-2		
*D404	D-1	IC716	F-3	Q506	E-2		
*D405	D-2	IC717	E-4	Q507	E-2		
*D406	D-2	IC718	F-4	Q508	E-2		
*D407	D-2			*Q509	E-2		
*D408	D-2	*Q1	B-2	*Q510	E-2		
*D501	E-1	*Q51	E-1	*Q511	E-2		
*D502	E-1	*Q52	F-1	*Q512	E-2		
*D503	E-1	*Q53	D-1	*Q601	F-1		
*D504	E-1	*Q101	A-1	*Q602	F-1		
*D505	E-2	*Q102	A-1	*Q603	F-1		
*D506	E-2	*Q103	A-1	*Q604	F-1		
*D507	E-2	*Q104	A-1	Q605	F-2		
*D508	E-2	Q105	A-2	Q606	F-2		
*D601	F-1	Q106	A-2	Q607	F-2		
*D602	F-1	Q107	A-2	Q608	F-2		
*D603	F-1	Q108	A-2	*Q609	F-2		
*D604	F-1	*Q109	A-2	*Q610	F-2		
*D605	F-2	*Q110	A-2	*Q611	F-2		
*D606	F-2	*Q111	A-2	*Q612	F-2		
*D607	F-2	*Q112	A-2	*Q701	D-4		
*D608	F-2	*Q201	B-1	*Q702	D-4		

*: SOLDERING SIDE

CP-161; AUDIO OUTPUT BALANCED AMPLIFIER/DRIVER
HP-33; HEADPHONES AMPLIFIER/JACK
VR-62; HEADPHONES LEVEL VOLUME

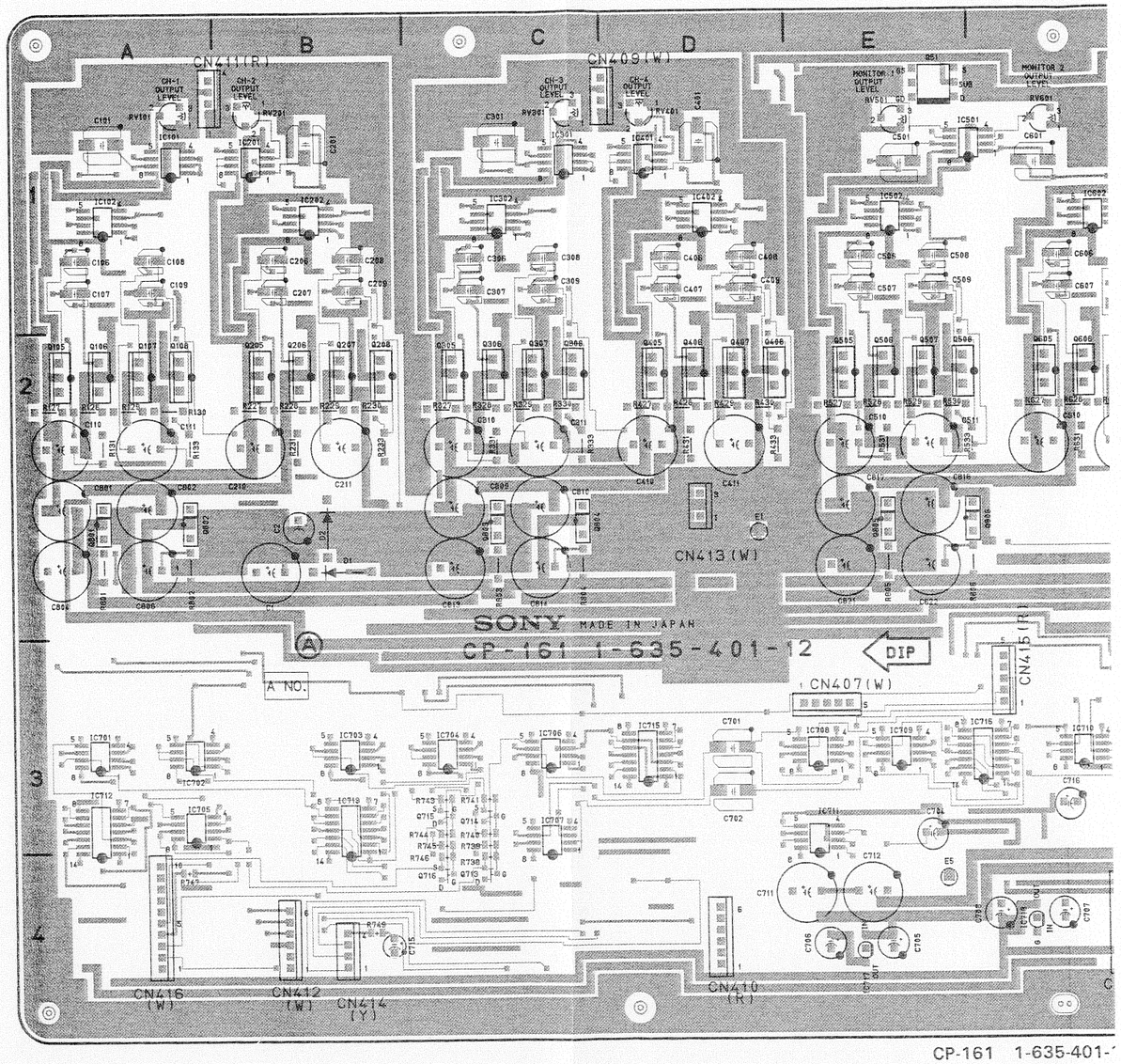

CP-161 1-635-401-

A Side is the same as Componer

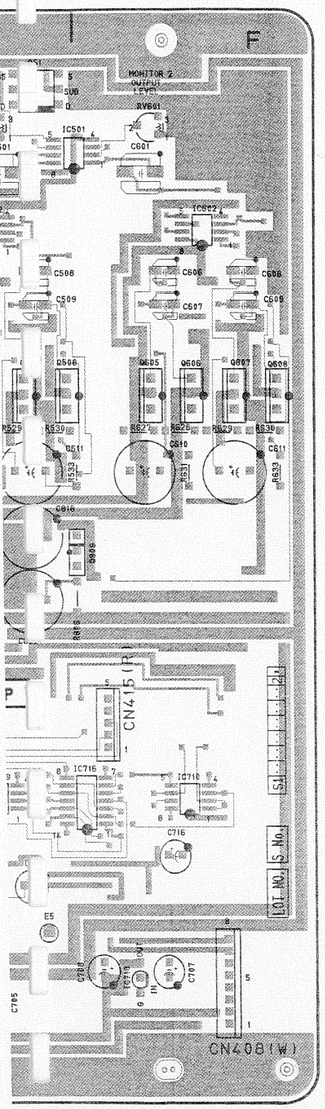

CP-161 1-635-401-12 A SIDE

t same as Component Side.

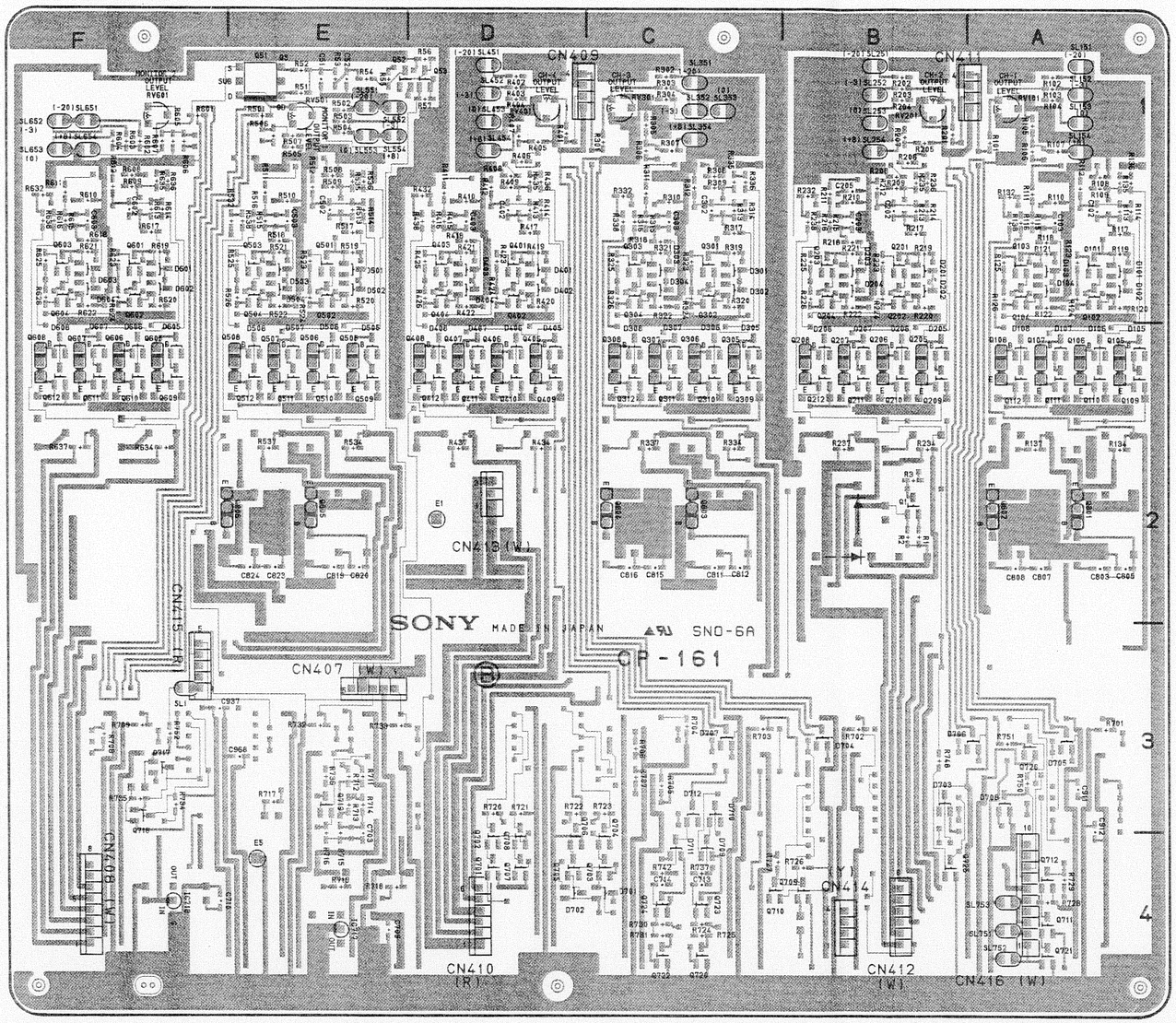

CP-161 1-635-401-12 B SIDE

B Side is the same as Solder Side.

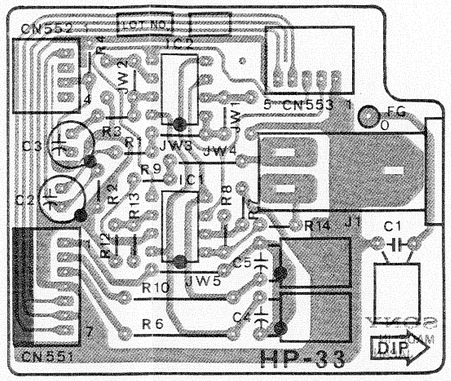

HP-33 1-622-590-13 COMPONENT SIDE

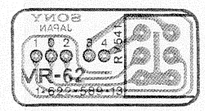

VR-62 1-622-589-13 COMPONENT SIDE

SW-144PC; SELECT SWITCH/DISPLAY
VR-61; VIDEO/TRACKING CONTROL VOLUME
DP-72; VIDEO/RF METER LED
DP-74; AUDIO LEVEL METER CONTROLLER/DRIVE
DP-73; DC-AC CONVERTER

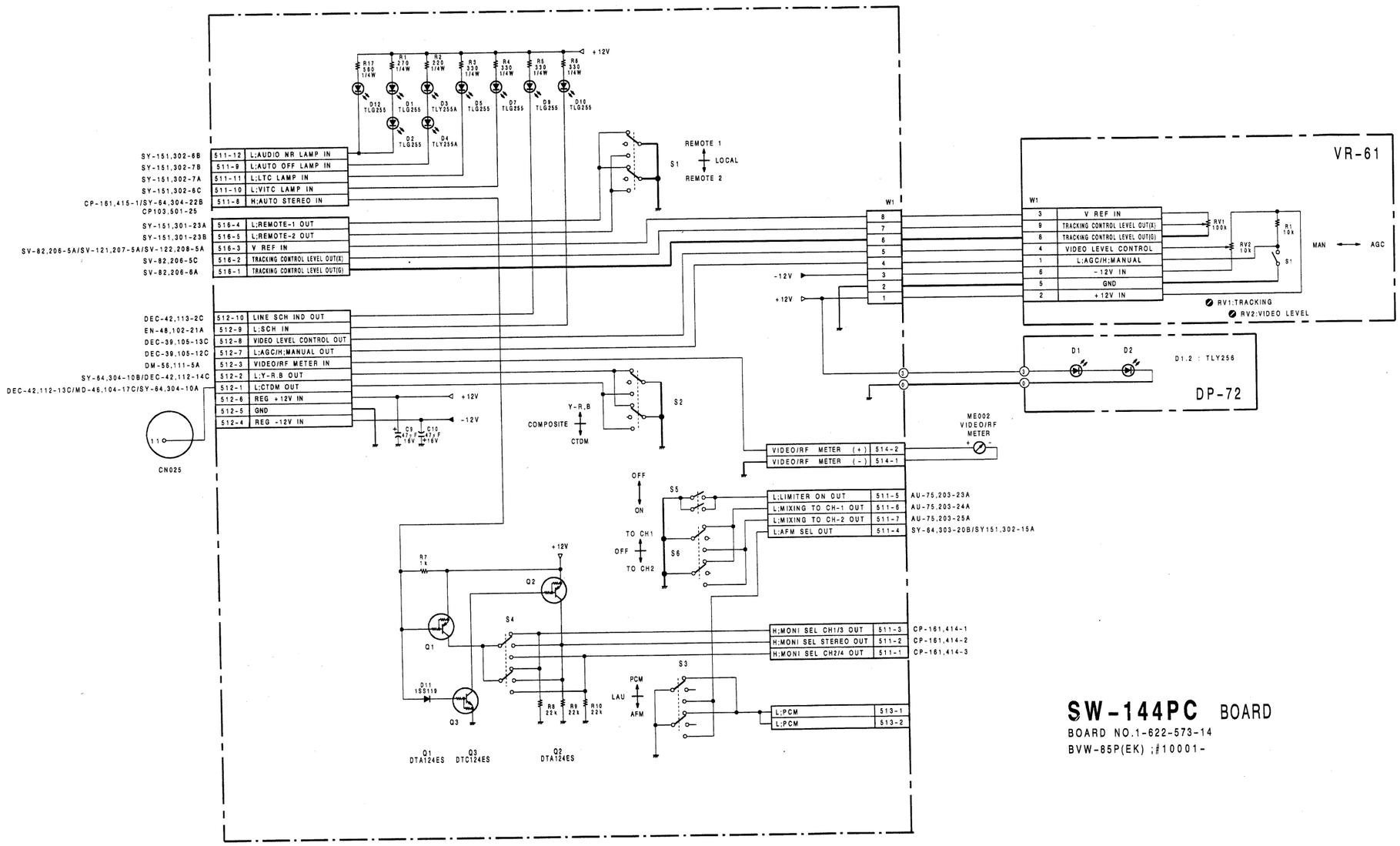

SW-144PC BOARD

BOARD NO.1-622-573-14
BVW-85P(EK) ;#10001-

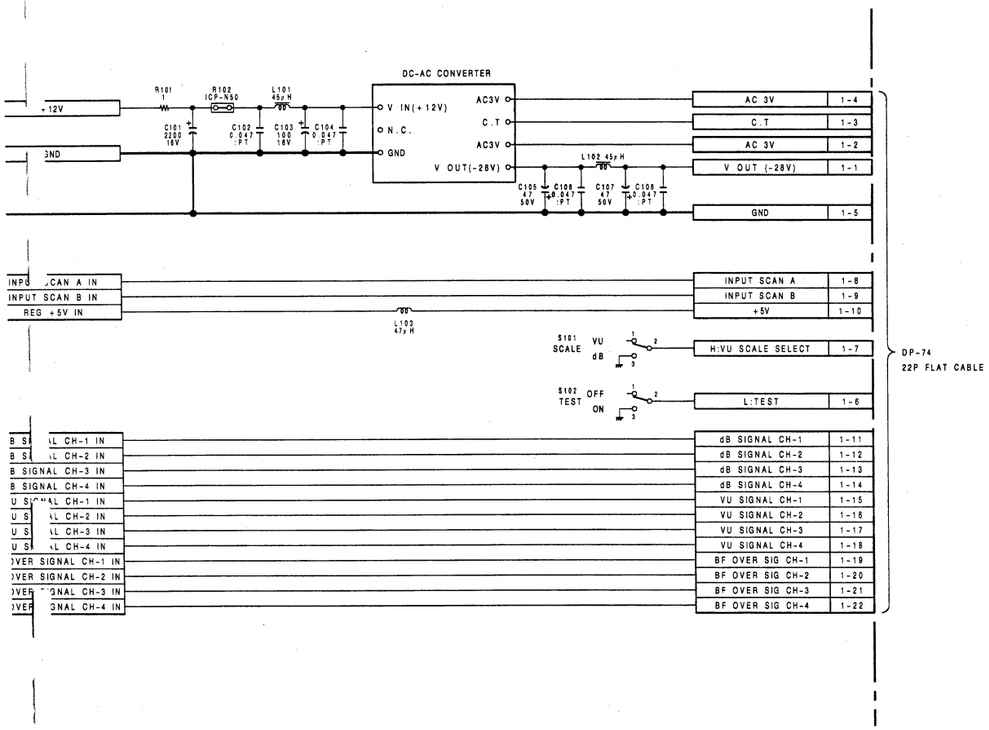

DP-73 BOARD
BOARD NO.1-622-575-12
BVW-85P(EK) ;#10001-

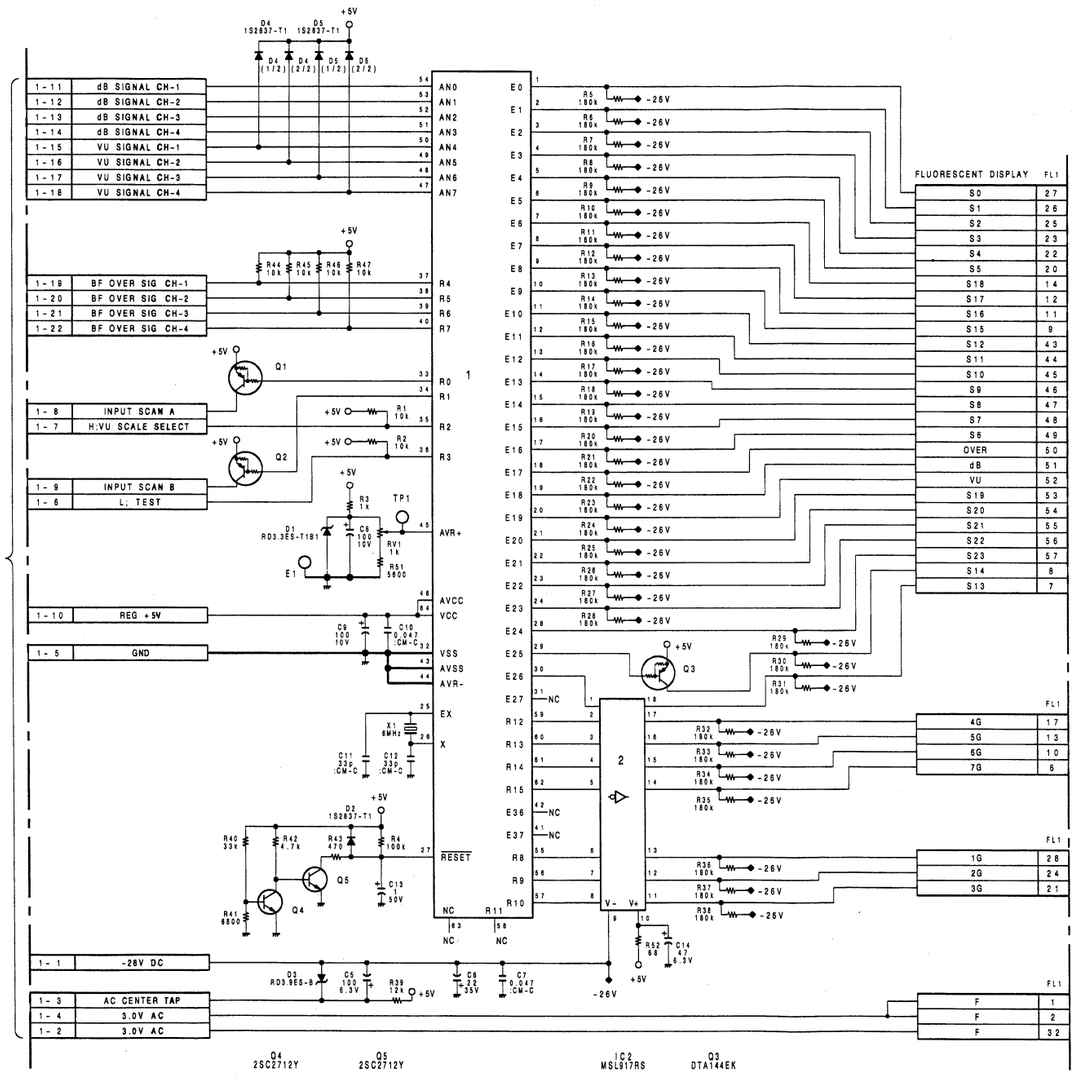

DP-74 BOARD
BOARD NO.1-622-576-12
BVW-85P(EK) ;#10001-

SW-144PC; SELECT SWITCH/DISPLAY
DP-72; VIDEO/RF METER LED
VR-61; VIDEO/TRACKING CONTROL VOLUME

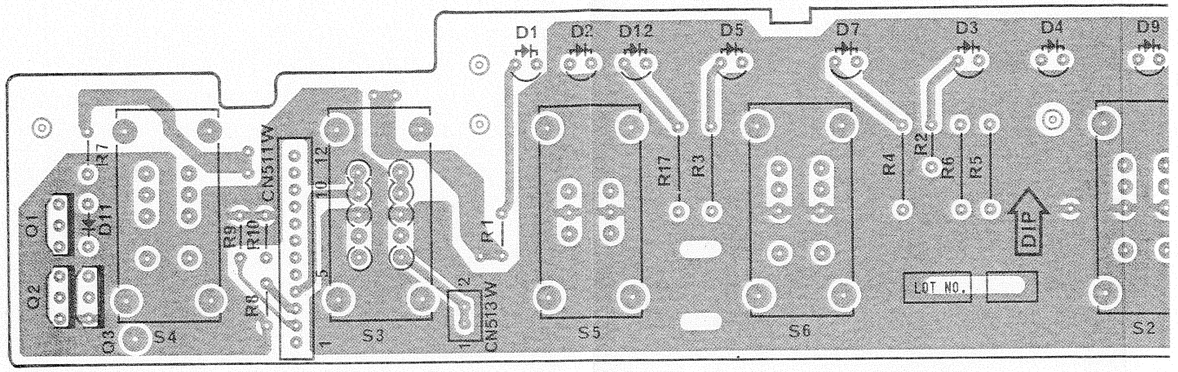

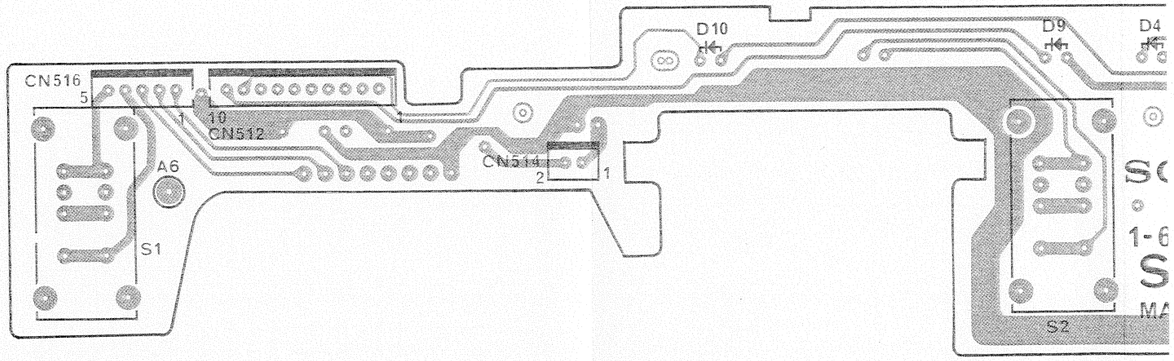

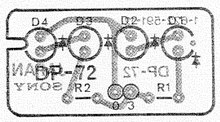

DP-72 1-622-591-12
COMPONENT SIDE

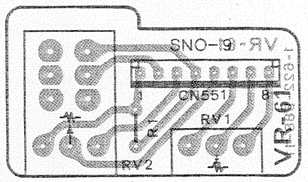

VR-61 1-622-588-11 COMPONENT SIDE

SW-144PC; SELECT SWITCH/DISPLAY
DP-72; VIDEO/RF METER LED
VR-61; VIDEO/TRACKING CONTROL VOLUME

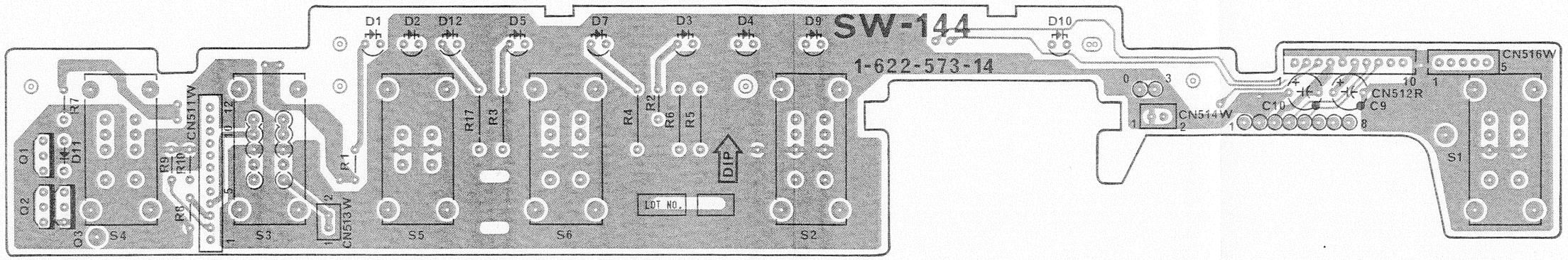

SW-144PC 1-622-573-14 COMPONENT SIDE

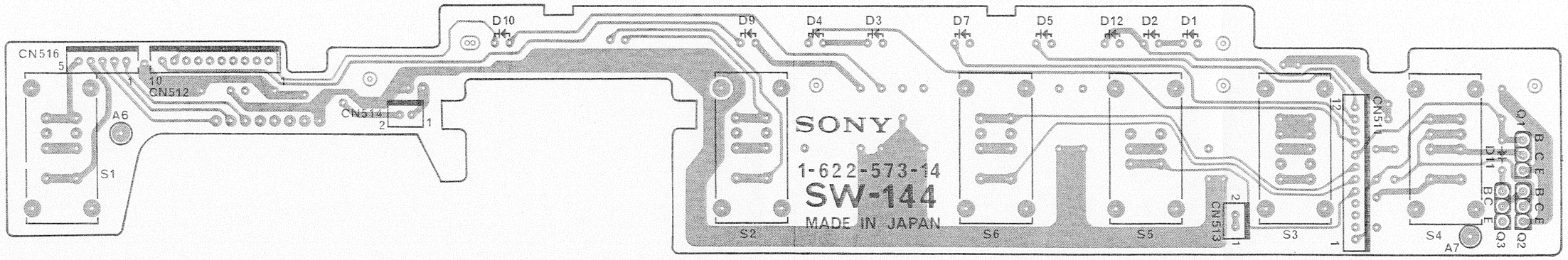

SW-144PC 1-622-573-14 SOLDER SIDE

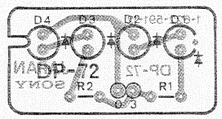

DP-72 1-622-591-12
COMPONENT SIDE

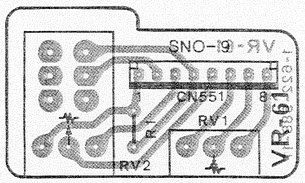

VR-61 1-622-588-11 COMPONENT SIDE

DP-74; AUDIO LEVEL METER
DP-73; DC-AC/DC CONVERTER

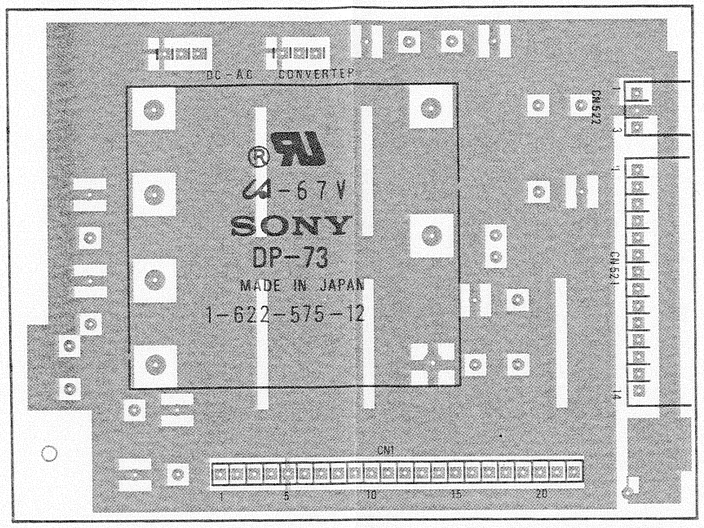

DP-73 1-622-575-12 COMPONENT SIDE

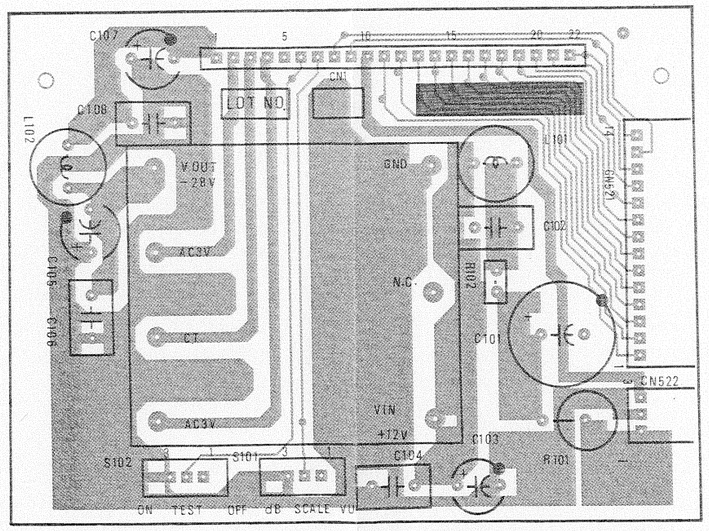

DP-73 1-622-575-12 SOLDER SIDE

DP-74; AUDIO LEVEL METER
DP-73; DC-AC/DC CONVERTER

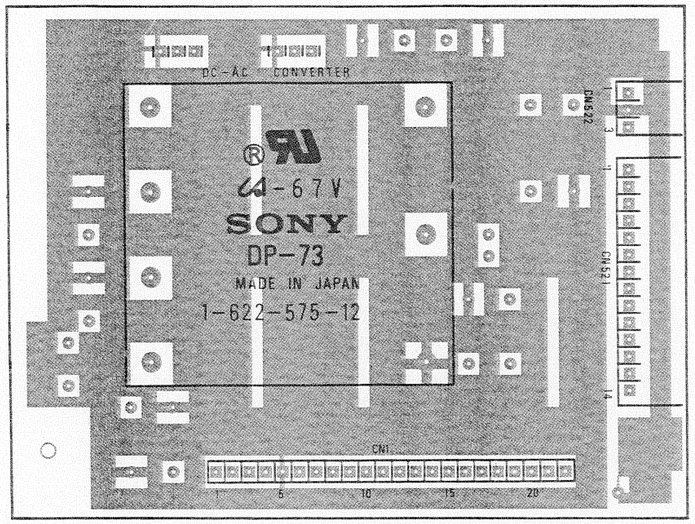

DP-73 1-622-575-12 COMPONENT SIDE

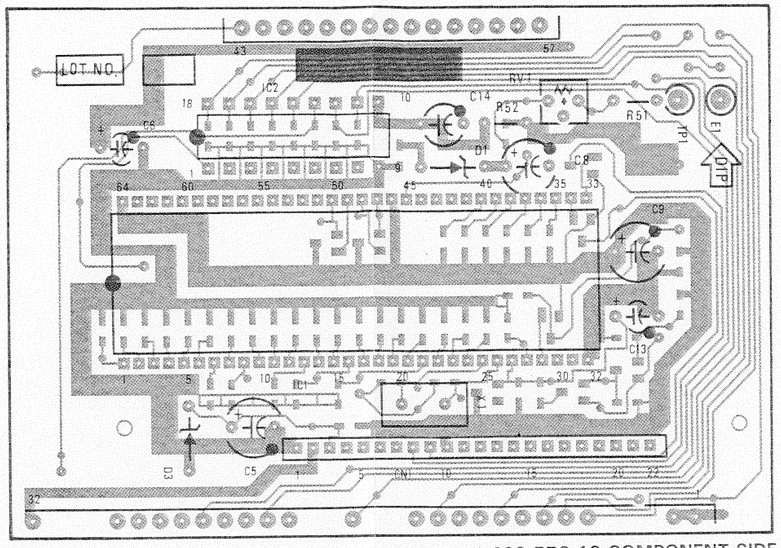

DP-74 1-622-576-12 COMPONENT SIDE

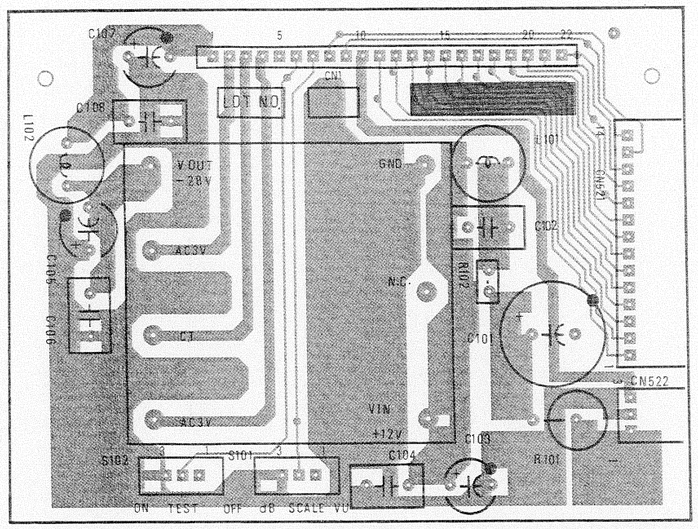

DP-73 1-622-575-12 SOLDER SIDE

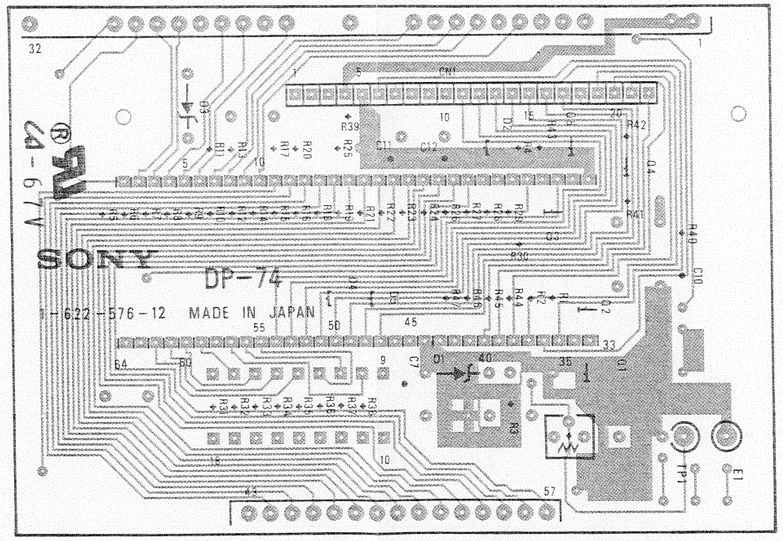

DP-74 1-622-576-12 SOLDER SIDE

SV-82PC(1/2); COUNTER

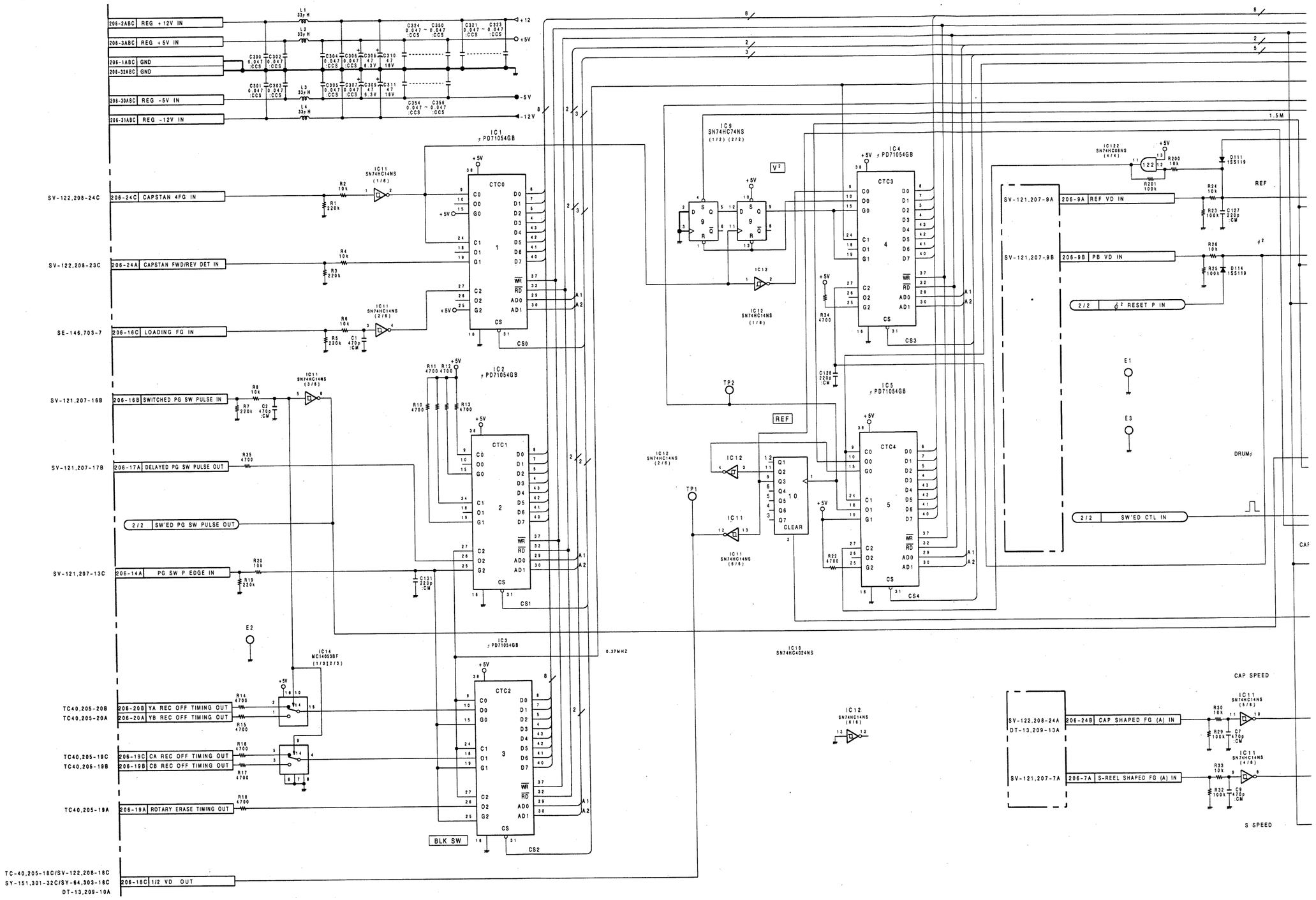

A | B | C | D | E | F | G | H

SV-82PC(1/2)

D0~D7	2/2
L:WR	2/2
L:RD	2/2
A0~A2	2/2
CS6~CS4,CS8~CSA	2/2
φ 6MHz	2/2
φ 1.5MHz	2/2
φ 0.37MHz	2/2
φ 0.19MHz	2/2
240Hz INT CLOCK	2/2
V² START	2/2
1/2VD RESET	2/2
REF TIMER SET	2/2

SV-121,207-9A	206-9A REF VD IN
SV-121,207-9B	206-9B PB VD IN
2/2	φ² RESET P IN
2/2	SW'ED CTL IN
SV-122,208-24A DT-13,209-13A	206-24B CAP SHAPED FG (A) IN
SV-121,207-7A	206-7A S-REEL SHAPED FG (A) IN

SV-82PC BOARD (1/2)

BOARD NO.1-622-582-14

BVW-85P(EK) ;#10001-

SV-82PC(2/2); MICROCOMPUTER SERVO

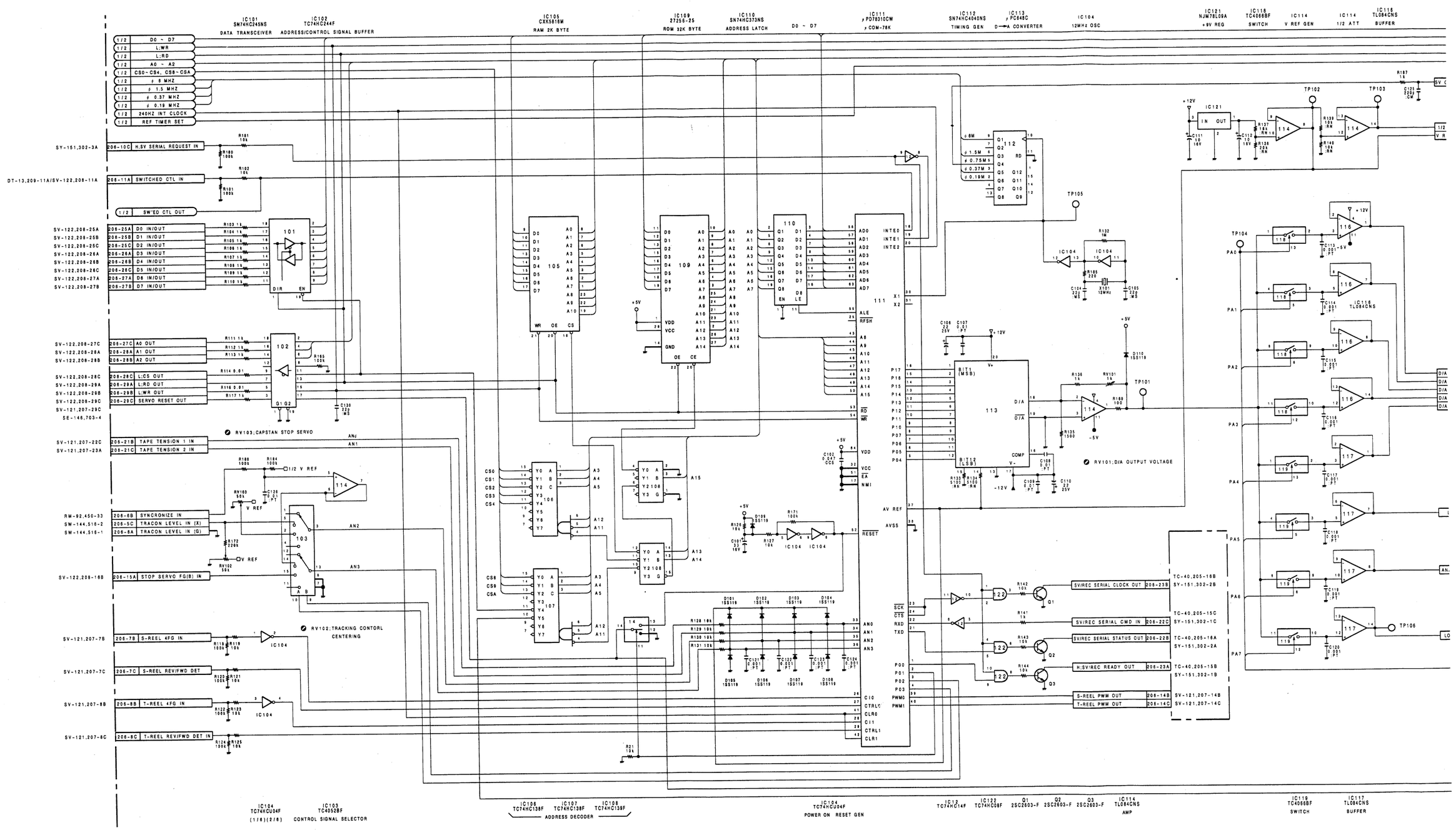

SV-82PC(2/2)

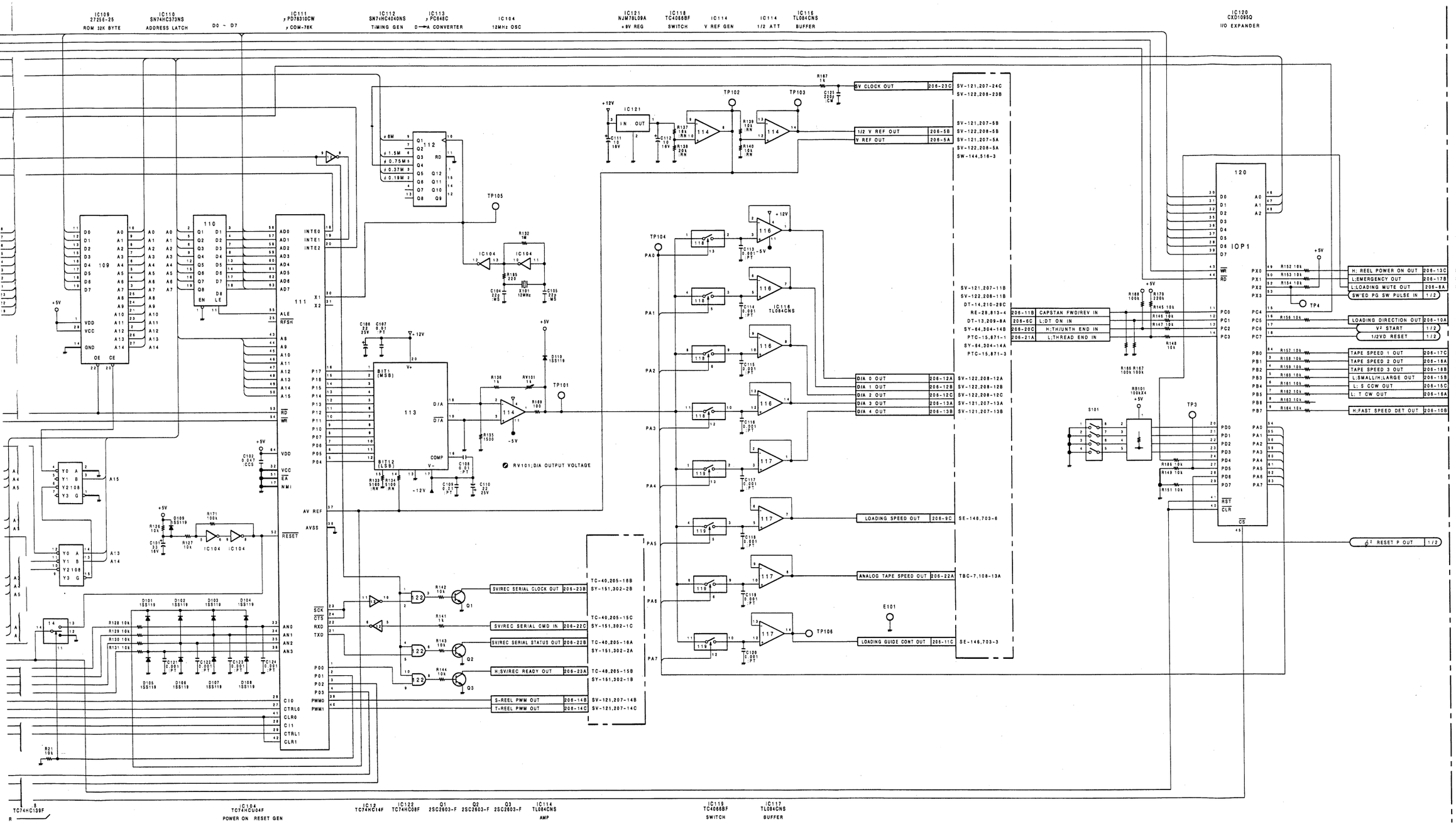

SV-82PC BOARD (2/2)

BOARD NO.1-622-582-14

BVW-85P(EK) ;#10001-

SC-82PC(1-622-582-14)
BVW-85P

CN1109	C-2	IC104	E-2
CN206	C-7	IC105	C-3
		IC106	B-5
D1	E-3	IC107	B-4
D2	E-3	IC108	B-3
D101	C-2	IC110	D-3
D102	C-2	IC111	D-2
D103	C-1	IC112	E-1
D104	C-1	IC113	E-4
D105	C-2	IC114	E-5
D106	C-2	IC116	E-5
D107	C-1	IC117	E-6
D108	C-1	IC118	E-5
D109	E-3	IC119	E-6
D110	E-4	IC120	C-5
D111	D-4	IC121	E-4
D114	D-5	IC122	B-2
E1	E-4	Q1	E-2
E2	E-2	Q2	E-3
E3	A-7	Q3	E-3
E101	E-7		
		RV101	E-4
IC1	A-6	RV102	D-1
IC2	A-5	RV103	D-1
IC3	A-4		
IC4	A-3	S101	B-1
IC5	A-2		
IC6	D-5	TP1	B-4
IC7	C-5	TP2	B-1
IC8	C-5	TP3	A-6
IC9	A-2	TP4	C-6
IC10	B-1	TP101	E-4
IC11	B-4	TP102	E-4
IC12	B-1	TP103	E-5
IC14	B-3	TP104	E-5
IC101	C-6	TP105	E-1
IC102	B-6	TP106	E-7
IC103	E-3		
		X101	E-2

SV-82PC; MICROCOMPUTER SERVO

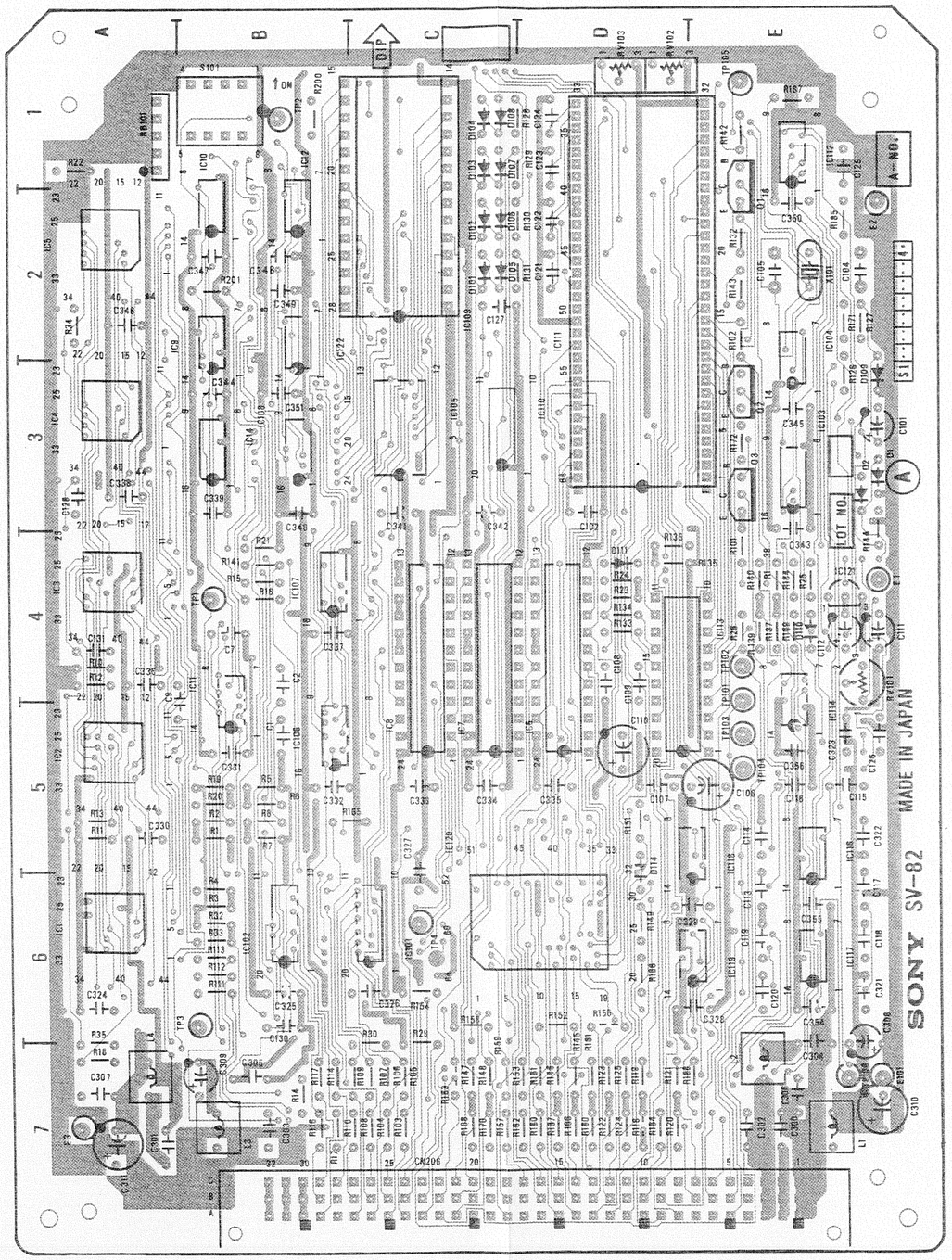

SV-82PC 1-622-582-14 A SIDE

A Side is the same as Component Side.

SV-82PC; MICROCOMPUTER SERVO

14)

04	E-2
05	C-3
06	B-5
07	B-4
08	B-3
10	D-3
11	D-2
12	E-1
13	E-4
14	E-5
16	E-5
17	E-6
18	E-5
19	E-6
20	C-5
21	E-4
22	B-2
	E-2
	E-3
	E-3
01	E-4
02	D-1
03	D-1
1	B-1
	B-4
	B-1
	A-6
	C-6
01	E-4
02	E-4
03	E-5
04	E-5
05	E-1
06	E-7
	E-2

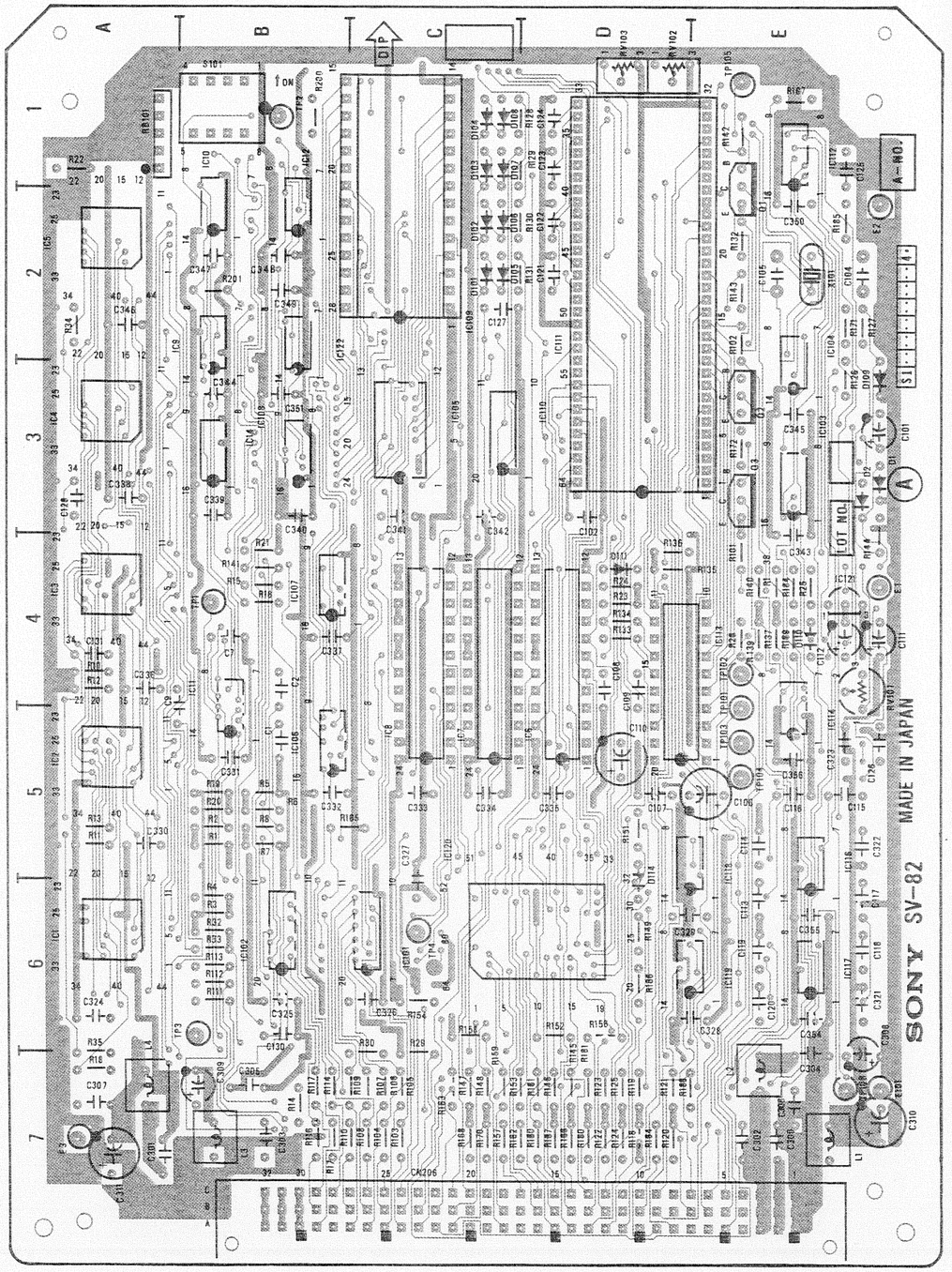

SV-82PC 1-622-582-14 A SIDE

A Side is the same as Component Side.

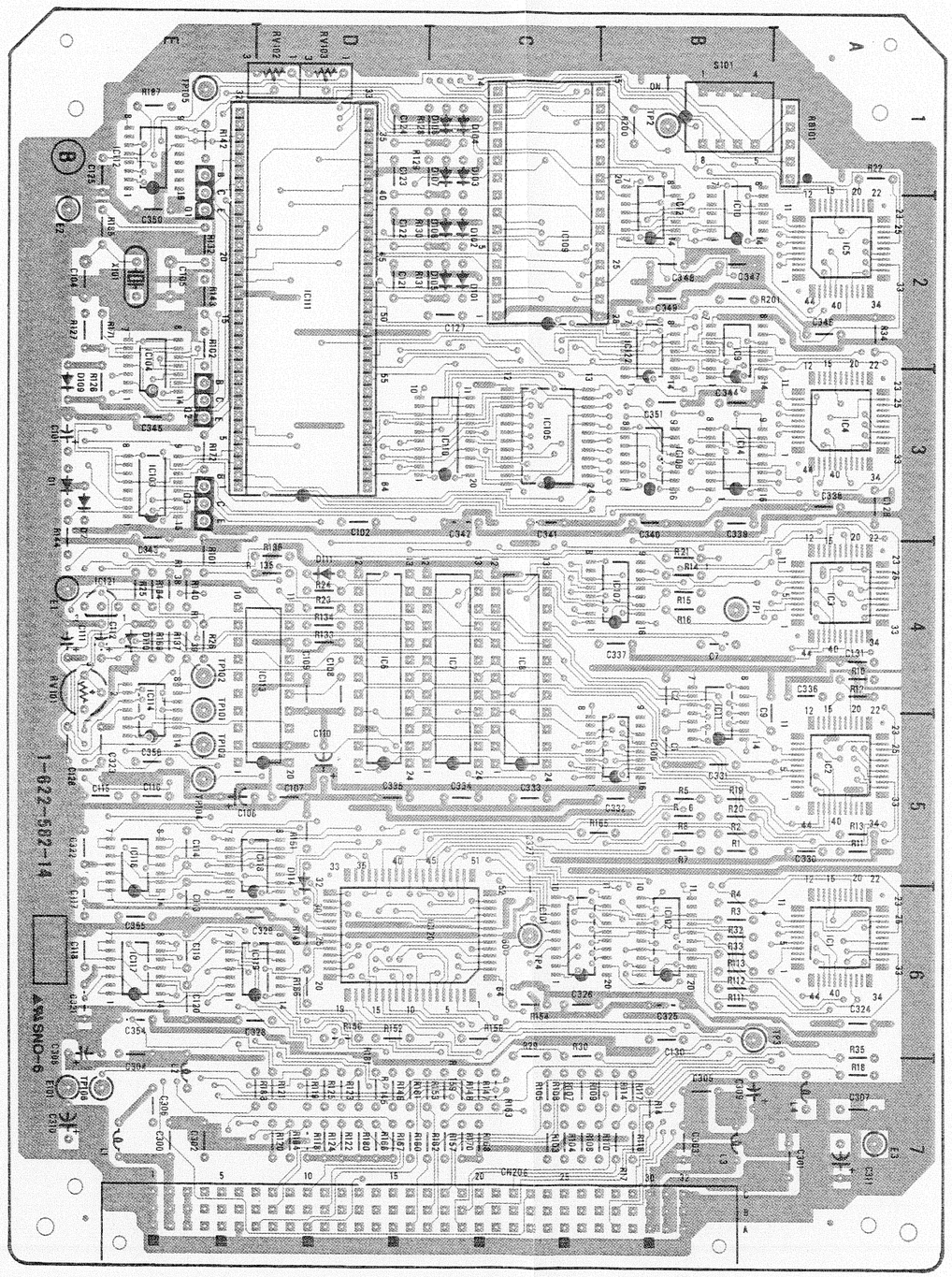

SV-82PC 1-622-582-14 B SIDE

B Side is the same as Solder Side.

SV-121(1/2); REEL SERVO

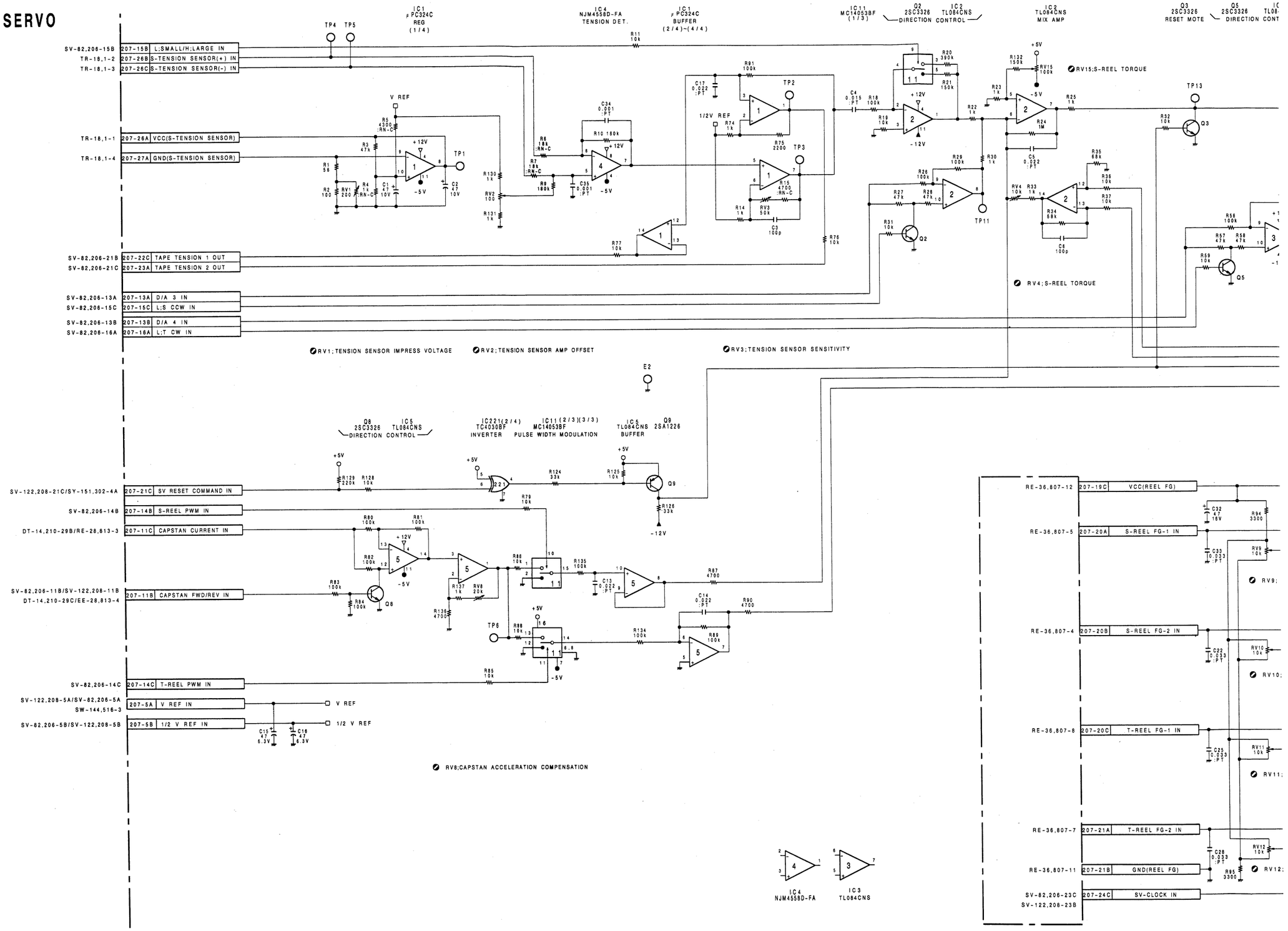

SV-121(1/2)

IC4 NJM4558D-FA TENSION DET.
IC1 μPC324C BUFFER (2/4)~(4/4)
IC11 MC14053BF (1/3)
Q2 2SC3326 DIRECTION CONTROL
IC2 TL084CNS MIX AMP
Q3 2SC3326 RESET MOTE
Q5 2SC3325 DIRECTION CONTROL
IC3 (1/4) TL084CNS MIX AMP
IC3 (2/4)(3/4) TL084CNS MIX AMP
Q4 2SC3326 RESET MUTE

+5V REG (1/4)

R11 10k
R91 100k
C17 0.022 :PT
TP2
R20 390k
R21 150k
C4 0.015 :PT
R18 100k
R19 10k
+12V
-12V
R22 1k
R23 1k
R132 150k
RV15 100k
RV15;S-REEL TORQUE
R25 1k
TP13
R32 10k
Q3
R24 1M
C5 0.022 :PT
1/2V REF
R74 1k
R75 2200
TP3
C34 0.001 :PT
R10 180k
R6 18k :RN-C
R7 18k :RN-C
R9 180k
C35 0.001 :PT
R130 1k
RV2 100
R131 1k
TP1
C2 47 10V
R15 4700 :RN-C
R14 1k
RV3 50k
C3 100p
R76 10k
R77 10k
R29 100k
R30 1k
R26 100k
R27 47k
R28 47k
R31 10k
Q2
TP11
R35 68k
R36 10k
R37 10k
R33 1k
RV4 10k
R34 68k
C6 100p
RV4;S-REEL TORQUE
TP12
R60 100k
R65 1k
R56 100k
R57 47k
R58 47k
R59 10k
Q5
C11 0.022 :PT
R67 1k
R133 150k
RV16 100k
R40 1k
TP14
R39 10k
Q4
R68 1M
R71 68k
R72 10k
R73 10k
R70 68k
C12 100p
R13 10k
R69 1k

PRES. OLTAGE
RV2;TENSION SENSOR AMP OFFSET
RV3;TENSION SENSOR SENSITIVITY
RV13;T-REEL TORQUE
RV16;T-REEL TORQUE

S-REEL MOTOR DRIVE OUT | 207-25A | RE-36,807-3
T-REEL MOTOR DRIVE OUT | 207-25B | RE-36,807-6
GND(REEL MOTOR DRIVE) | 207-25C

T-REEL CURRENT IN | 207-24A | RE-36,807-9
GND(REEL CURRENT) | 207-24B | RE-36,807-10

S-REEL CURRENT IN | 207-23B | RE-36,807-2
GND(REEL CURRENT) | 207-23C | RE-36,807-10

IC5 TL084CNS ROL
IC221(2/4) TC4030BF INVERTER
IC11(2/3)(3/3) MC14053BF PULSE WIDTH MODULATION
IC5 TL084CNS BUFFER
Q9 2SA1226

E2
+5V
R124 33k
R125 10k
Q9
R126 33k
-12V
R78 10k
R5 100k
R86 10k
R135 100k
R137 1k
R8 20k
R138 4700
C13 0.022 :PT
R87 4700
C14 0.022 :PT
R90 4700
TP6
R88 10k
R134 100k
R89 100k
R85 10k
-5V

RV8;CAPSTAN ACCELERATION COMPENSATION

IC6 TL084CNS SHAPER (1/4)~(4/4)
IC7 LM2903M LEVEL COMP (1/2)(2/2)
IC8 LM2903M LEVEL COMP (1/2)(2/2)
IC10 CX23028 4FG GEN/ DIR DET

RE-36,807-12 | 207-19C | VCC(REEL FG)
RE-36,807-5 | 207-20A | S-REEL FG-1 IN
RE-36,807-4 | 207-20B | S-REEL FG-2 IN
RE-36,807-8 | 207-20C | T-REEL FG-1 IN
RE-36,807-7 | 207-21A | T-REEL FG-2 IN
RE-36,807-11 | 207-21B | GND(REEL FG)
SV-82,206-23C / SV-122,208-23B | 207-24C | SV-CLOCK IN

R97 22k
C32 4.7 16V
R94 3300
R96 22k
C20 22p
RV9 10k
C33 0.033 :PT
RV9; T-REEL FG DUTY
R103 22k
R102 22k
C24 22p
RV10 10k
C22 0.033 :PT
RV10; T-REEL FG DUTY
R108 22k
R107 22k
C27 22p
RV11 10k
C25 0.033 :PT
RV11;S-REEL FG DUTY
R113 22k
R112 22k
C30 22p
RV12 10k
C28 0.033 :PT
R85 3300
RV12;S-REEL FG DUTY
R127 1k
R93 10
R122 10k
R98 3900
D5 1SS123
R99 100k
R100 4700
TP7
R101 4700
R104 3900
D6 1SS123
R105 100k
R106 4700
TP8
R109 3900
D7 1SS123
R110 100k
R111 4700
R114 3900
D8 1SS123
R123 10k
C31 4.7 10V
R116 4700
R115 100k
TP10
E1
TP9
A1 B1 A2 B2 MODE PO1 CTO1 DIR1 EX1 PO2 CTO2 DIR2 EX2

S-REEL SHAPED FG(A) OUT | 207-7A | SV-82,206-7A

S-REEL 4FG OUT | 207-7B | SV-82,206-7B
S-REEL REV/FWD DET OUT | 207-7C | SV-82,206-7C

T-REEL 4FG OUT | 207-8B | SV-82,206-8B
T-REEL REV/FWD DET OUT | 207-8C | SV-82,206-8C

T-REEL SHAPED FG(A)OUT | 207-8A | NC

IC4 NJM4558D-FA
IC3 TL084CNS

SV-121 BOARD (1/2)

BOARD NO.1-635-399-11,12
BVW-85P(EK) ;#10001-

17-518

17-519

E F G H I J K L

1 2 3 4 5

SV-121(2/2); SW PULSE/VD GENERATOR

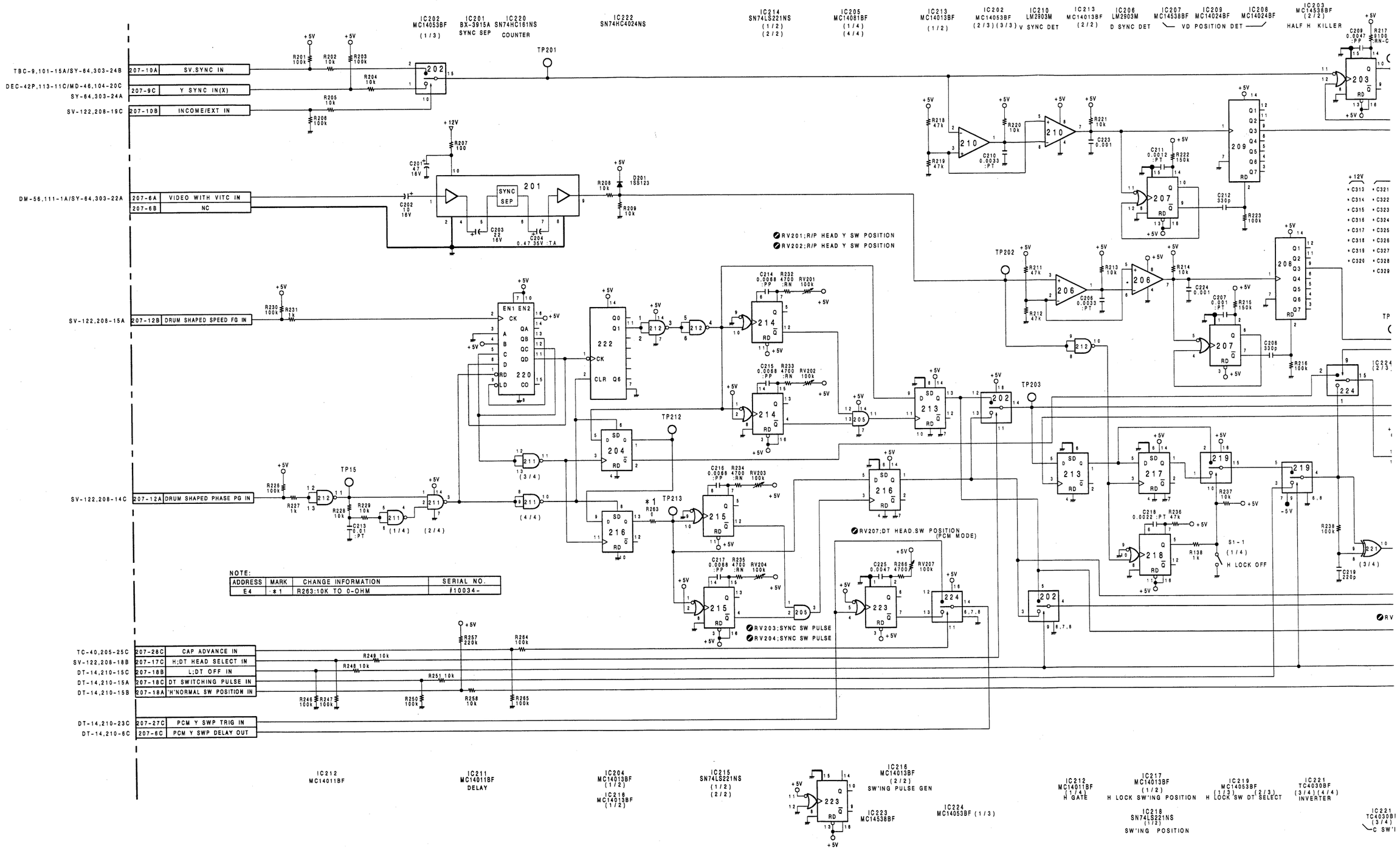

SV-121(2/2)

IC222 SN74HC4024NS
IC214 SN74LS221NS (1/2) (2/2)
IC205 MC14081BF (1/4) (4/4)
IC213 MC14013BF (1/2)
IC202 MC14053BF (2/3)(3/3) V SYNC DET
IC210 LM2903M
IC213 MC14013BF (2/2)
IC206 LM2903M D SYNC DET
IC207 MC14538BF VD POSITION DET
IC209 MC14024BF
IC208 MC14024BF
IC203 MC14538BF (2/2) HALF H KILLER
IC204 MC14013BF (2/2) REF VD GEN
IC203 MC14538BF
IC205 MC14081BF (2/4)

RV201;R/P HEAD Y SW POSITION
RV202;R/P HEAD Y SW POSITION
RV203;SYNC SW PULSE
RV204;SYNC SW PULSE
RV205;DT HEAD SW POSITION (PCM MODE)
RV206;R/P HEAD C SW POSITION
RV207;DT HEAD SW POSITION (PCM MODE)
RV210;FRAMING ADJ

TP202 TP203 TP204 TP205 TP207 TP208 TP210 TP211 TP212 TP213

E201
S1-1 (1/4) H LOCK OFF
S1-2 (2/4)

+12V: C313 C321 C330 C339
+5V: C314 C322 C331 C340 C315 C323 C332 C341 C316 C324 C333 C342 C317 C325 C334 C343 C318 C326 C335 C344 C319 C327 C336 C345 C320 C328 C337 C346 C329 C338 C357
-5V: C350 C351 C352 C353
-12V: C354 C355 C356

REF VD OUT	207-9A	SV-82,206-9A
REG +12V	207-2ABC	
REG +5V	207-3ABC	
GND	207-1ABC	
GND	207-32ABC	
REG -5V	207-30ABC	
REG -12V	207-31ABC	
PB VD OUT	207-9B	SV-82,206-9B
SWITCHED PG SW PULSE OUT	207-16B	SV-82,206-16B
DELAYED PG SW PULSE IN	207-17B	SV-82,206-17A
Y SWITCHING PULSE OUT	207-19A	A B DM-56,110-14C
PG SW PULSE EDGE OUT	207-13C	SV-82,206-14A
C SWITCHING PULSE OUT	207-19B	A B DM-56,111-13C AFM-1,202-28C VO-18,103-27C
DT PG SWITCH PULSE OUT	207-17A	DT-14,210-8A
TBC SWITCHING PULSE OUT	207-16C	TBC-12,107-2B
PG SWITCHING PULSE OUT	207-28A	SV-122,208-17C/CP153,482-1
PCM CLAMP MUTE OUT	207-14A	DM-56,110-13C

IC204 C14013BF (1/2)
IC216 MC14013BF (1/2)
IC215 SN74LS221NS (1/2) (2/2)
IC216 MC14013BF (2/2) SW'ING PULSE GEN
IC223 MC14538BF
IC224 MC14053BF (1/3)
IC212 MC14011BF (1/4) H GATE
IC217 MC14013BF (1/2) H LOCK SW'ING POSITION
IC218 SN74LS221NS (1/2) SW'ING POSITION
IC219 MC14053BF (1/3) (2/3) H LOCK SW DT SELECT
IC221 TC4030BF (3/4)(4/4) INVERTER
IC221 TC4030BF (3/4) C SW'ING POSITION
IC218 SN74LS221NS (2/2)
IC219 MC14053BF (3/3)
IC217 MC14013BF (2/2) C SW'ING PULSE GEN
IC205 MC14081BF (3/4) EDGE DET
IC221 TC4030BF (1/4)
IC225 TC4030BF

SV-121 BOARD (2/2)

BOARD NO.1-635-399-11,12
BVW-85P(EK) ;#10001-

S/N;10001 through 10053

SV-121(1-635-399-11)
BVW-85P

CN207	A-5	RV10	C-5
		RV11	C-4
*D5	E-4	RV12	D-3
*D6	E-4	RV13	G-2
*D7	D-4	RV15	E-2
*D8	D-4	RV16	G-1
*D201	D-7	RV201	L-2
*D202	H-2	RV202	L-3
		RV203	L-4
E1	J-1	RV204	L-4
E2	J-8	RV206	L-5
E201	L-7	RV207	L-6
		RV210	G-6
IC1	C-1		
IC2	D-2	S1	L-2
IC3	F-3		
IC4	B-3	TP1	A-3
IC5	F-4	TP2	B-1
IC6	C-5	TP3	D-2
IC7	D-4	TP4	B-4
IC8	D-4	TP5	B-3
IC10	E-6	TP6	G-3
IC201	B-8	TP7	D-5
IC202	G-7	TP8	E-5
IC203	F-6	TP9	D-5
IC204	G-6	TP10	D-5
IC205	J-1	TP11	D-2
IC206	E-7	TP12	E-3
IC207	F-7	TP13	D-1
IC208	C-6	TP14	E-1
IC209	D-6	TP15	G-4
IC210	E-7	TP201	L-7
IC211	G-4	TP202	D-7
IC212	G-5	TP203	J-8
IC213	K-6	TP204	L-6
IC214	K-2	TP205	L-6
IC215	J-2	TP207	J-1
IC216	H-3	TP208	B-6
IC217	K-7	TP210	F-7
IC218	J-4	TP211	F-5
IC219	H-7	TP212	J-3
IC220	H-4	TP213	J-3
IC221	H-6		
IC222	H-5		
IC223	K-4		
IC224	J-7		
IC225	J-2		
*Q2	D-2		
*Q3	D-1		
*Q4	D-1		
*Q5	F-3		
*Q8	F-5		
*Q9	G-1		
RV1	D-3		
RV2	D-3		
RV3	C-2		
RV4	E-3		
RV8	F-3		
RV9	C-5		

* : SOLDERING SIDE

SV-121; REEL SERVO

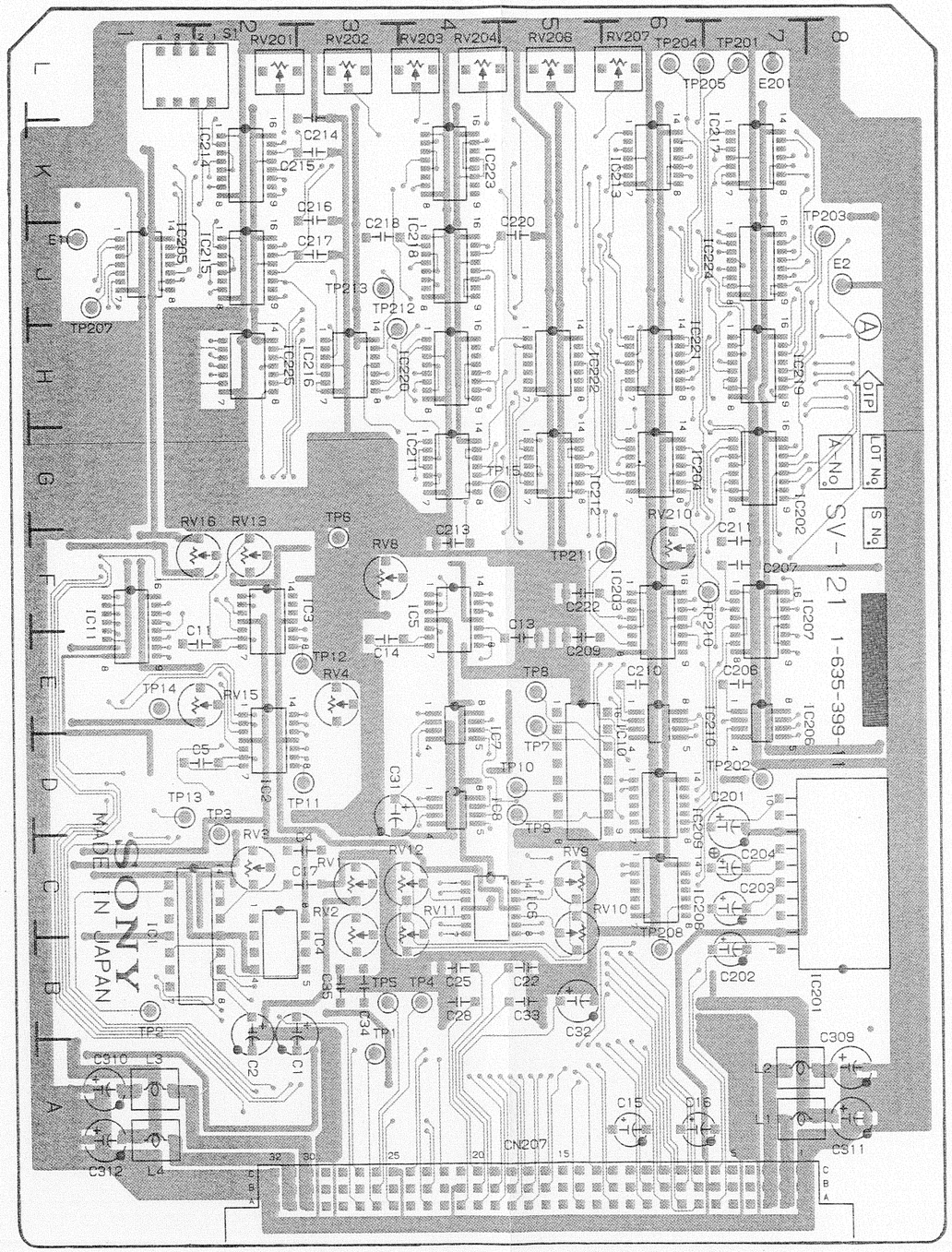

SV-121 1-635-399-11 A SIDE

A Side is the same as Component Side.

ugh 10053

SV-121; REEL SERVO

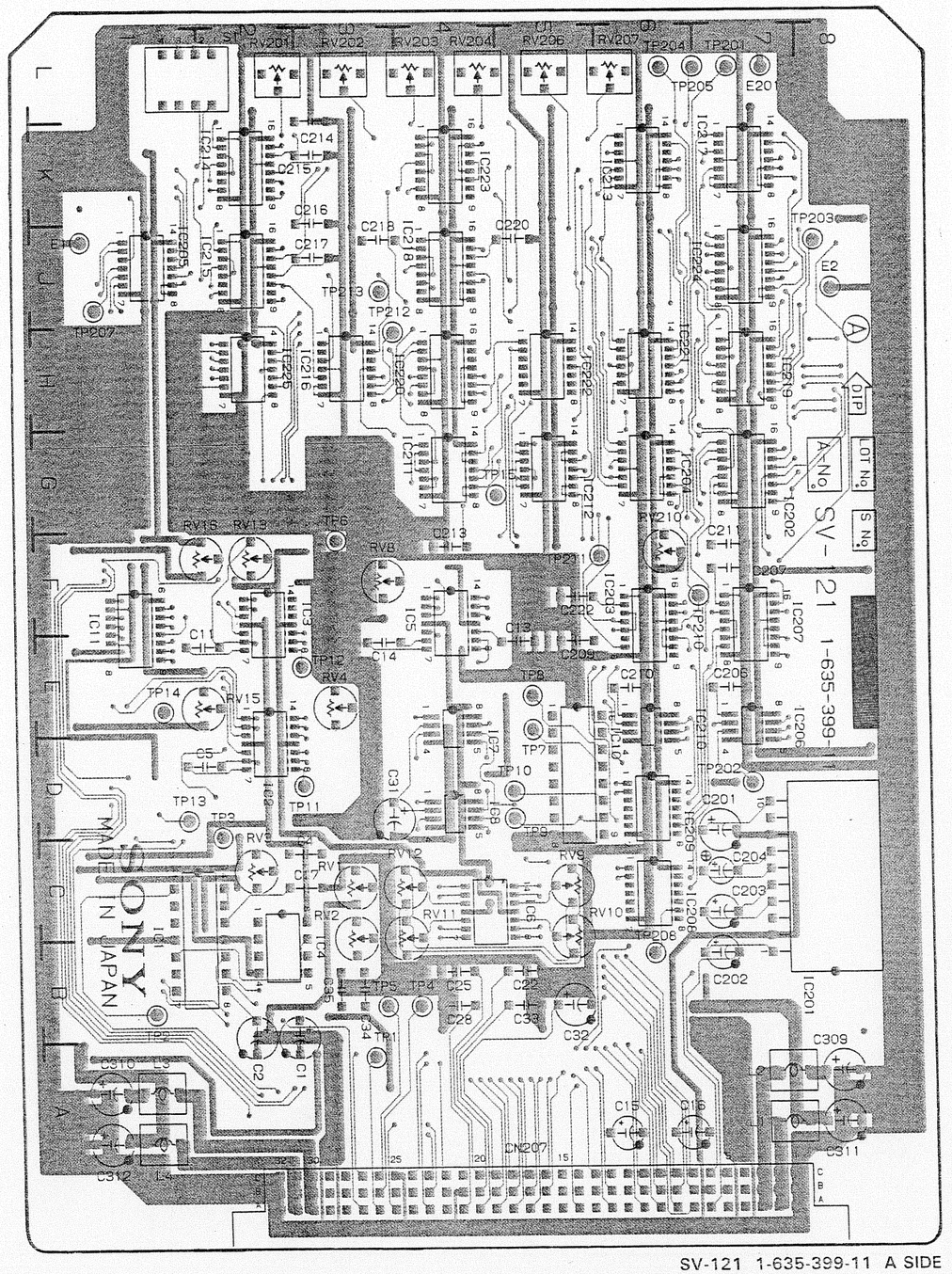

SV-121 1-635-399-11 A SIDE

A Side is the same as Component Side.

17-530(a)

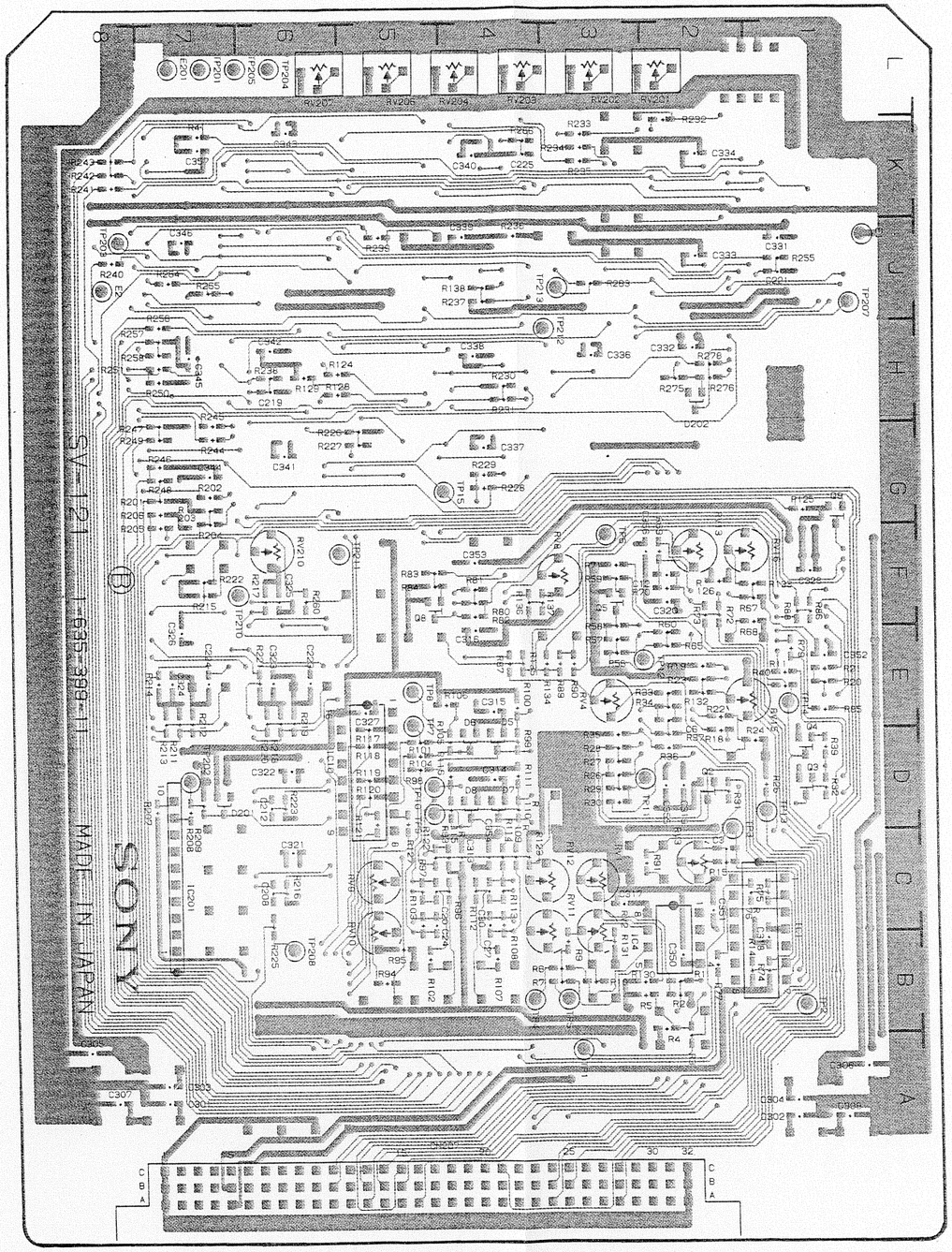

SV-121 1-635-399-11 B SIDE

B Side is the same as Solder Side.

17-531(a)

C-5
C-4
D-3
G-2
E-2
G-1
L-2
L-3
L-4
L-4
L-5
L-6
G-6

L-2

A-3
B-1
D-2
B-4
B-3
G-3
D-5
E-5
D-5
D-5
D-2
E-3
D-1
E-1
G-4
L-7
D-7
J-8
L-6
L-6
J-1
B-6
F-7
F-5
J-3
J-3

ING SIDE

S/N;10054 and higher

SV-121(1-635-399-12)
BVW-85P

CN207	A-5	RV10	C-5
		RV11	C-4
*D5	E-4	RV12	D-3
*D6	E-4	RV13	G-2
*D7	D-4	RV15	E-2
*D8	D-4	RV16	G-1
*D201	D-7	RV201	L-2
*D202	H-2	RV202	L-3
		RV203	L-4
E1	J-1	RV204	L-4
E2	J-8	RV206	L-5
E201	L-7	RV207	L-6
		RV210	G-6
IC1	C-1		
IC2	D-2	S1	L-2
IC3	F-3		
IC4	B-3	TP1	A-3
IC5	F-4	TP2	B-1
IC6	C-5	TP3	D-2
IC7	D-4	TP4	B-4
IC8	D-4	TP5	B-3
IC10	E-6	TP6	G-3
IC201	B-8	TP7	D-5
IC202	G-7	TP8	E-5
IC203	F-6	TP9	D-5
IC204	G-6	TP10	D-5
IC205	J-1	TP11	D-2
IC206	E-7	TP12	E-3
IC207	F-7	TP13	D-1
IC208	C-6	TP14	E-1
IC209	D-6	TP15	G-4
IC210	E-7	TP201	L-7
IC211	G-4	TP202	D-7
IC212	G-5	TP203	J-8
IC213	K-6	TP204	L-6
IC214	K-2	TP205	L-6
IC215	J-2	TP207	J-1
IC216	H-3	TP208	B-6
IC217	K-7	TP210	F-7
IC218	J-4	TP211	F-5
IC219	H-7	TP212	J-3
IC220	H-4	TP213	J-3
IC221	H-6		
IC222	H-5		
IC223	K-4		
IC224	J-7		
IC225	J-2		
*Q2	D-2		
*Q3	D-1		
*Q4	D-1		
*Q5	F-3		
*Q8	F-5		
*Q9	G-1		
RV1	D-3		
RV2	D-3		
RV3	C-2		
RV4	E-3		
RV8	F-3		
RV9	C-5		

* : SOLDERING SIDE

SV-121; REEL SERVO

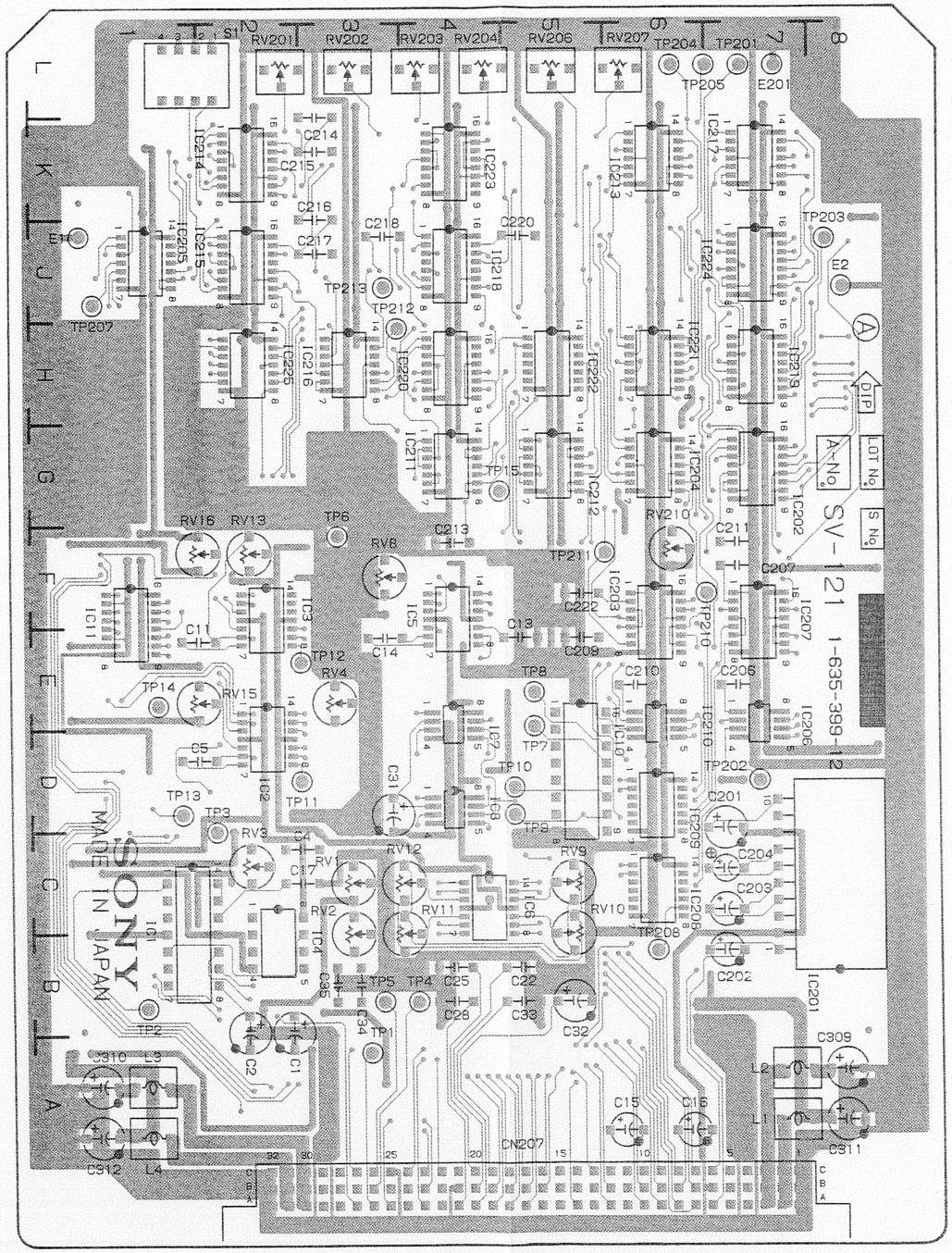

SV-121 1-635-399-12 A SIDE

A Side is the same as Component Side.

higher

(2)

0	C-5
1	C-4
2	D-3
3	G-2
5	E-2
6	G-1
01	L-2
02	L-3
03	L-4
04	L-4
06	L-5
07	L-6
10	G-6
	L-2
	A-3
	B-1
	D-2
	B-4
	B-3
	G-3
	D-5
	E-5
	D-5
0	D-5
1	D-2
2	E-3
3	D-1
4	E-1
5	G-4
01	L-7
02	D-7
03	J-8
04	L-6
05	L-6
07	J-1
08	B-6
10	F-7
11	F-5
12	J-3
13	J-3

ING SIDE

SV-121; REEL SERVO

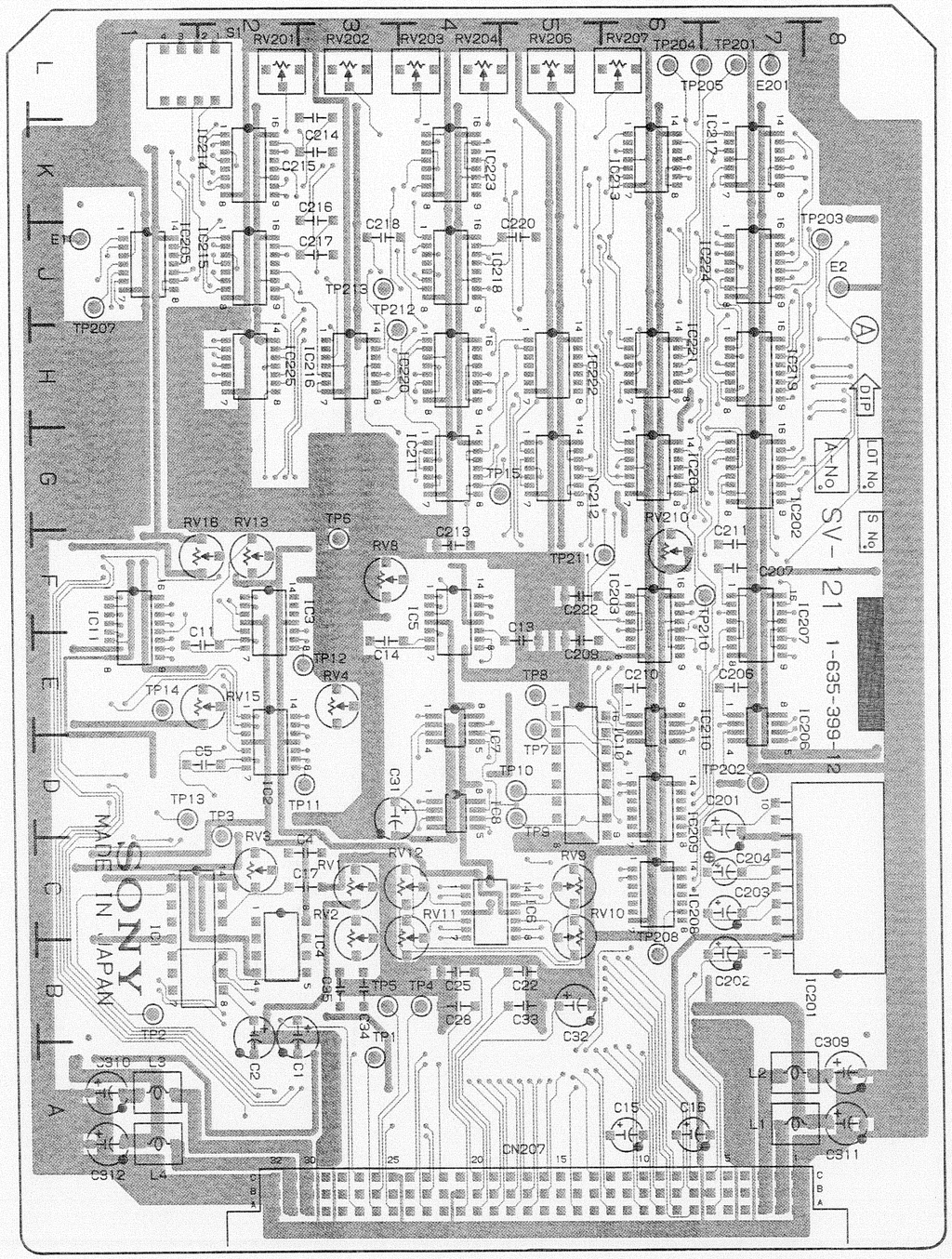

SV-121 1-635-399-12 A SIDE

A Side is the same as Component Side.

17-530(b)

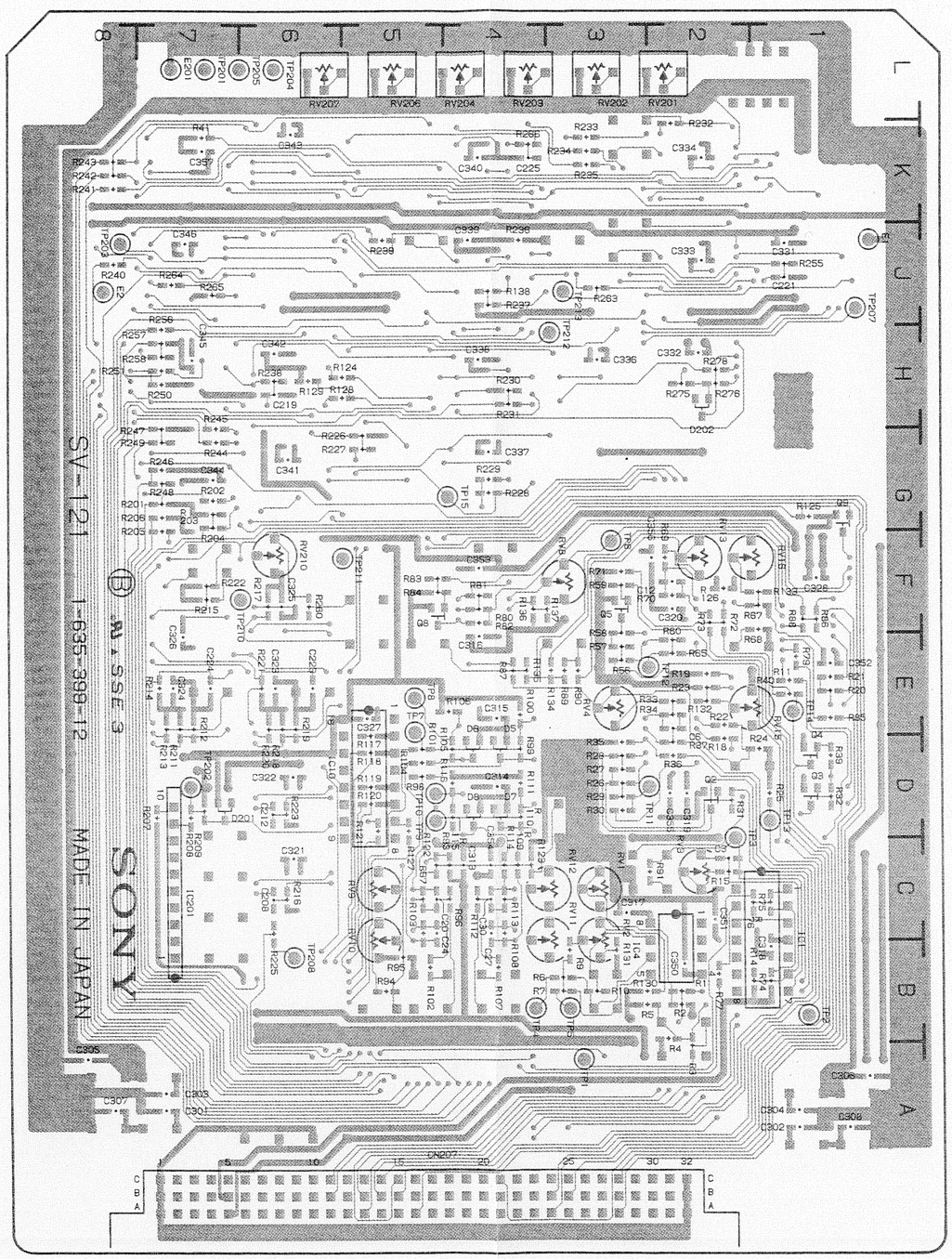

SV-121 1-635-399-12 B SIDE

B Side is the same as Solder Side.

17-531(b)

SV-122(1/2); CAPSTAN SERVO

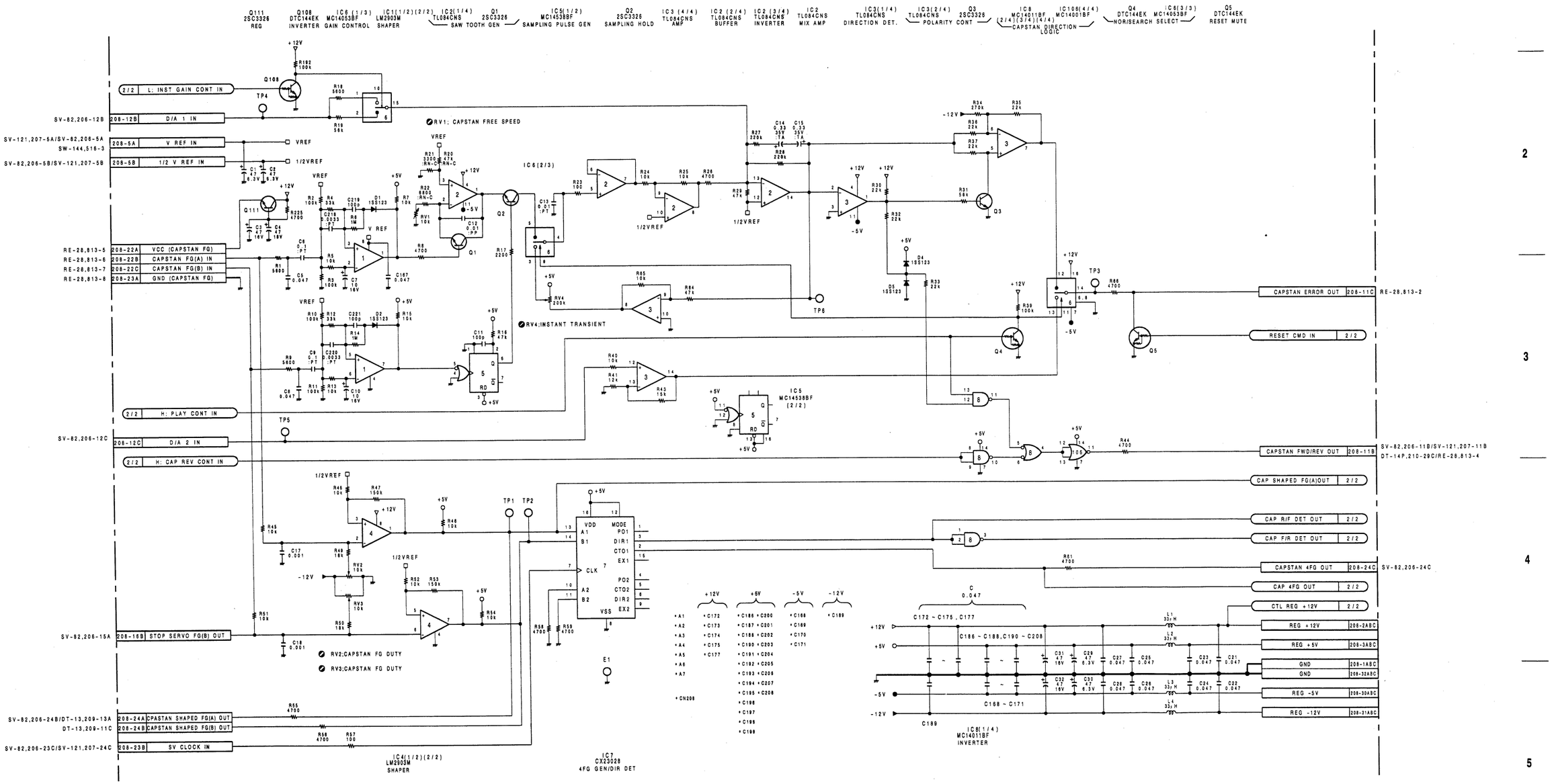

SV-122 BOARD (1/2)

BOARD NO.1-635-400-11,12
BVW-85P(EK) ;#10001-

SV-122(2/2); DRUM SERVO, CTL REC/PB AMPLIFIER

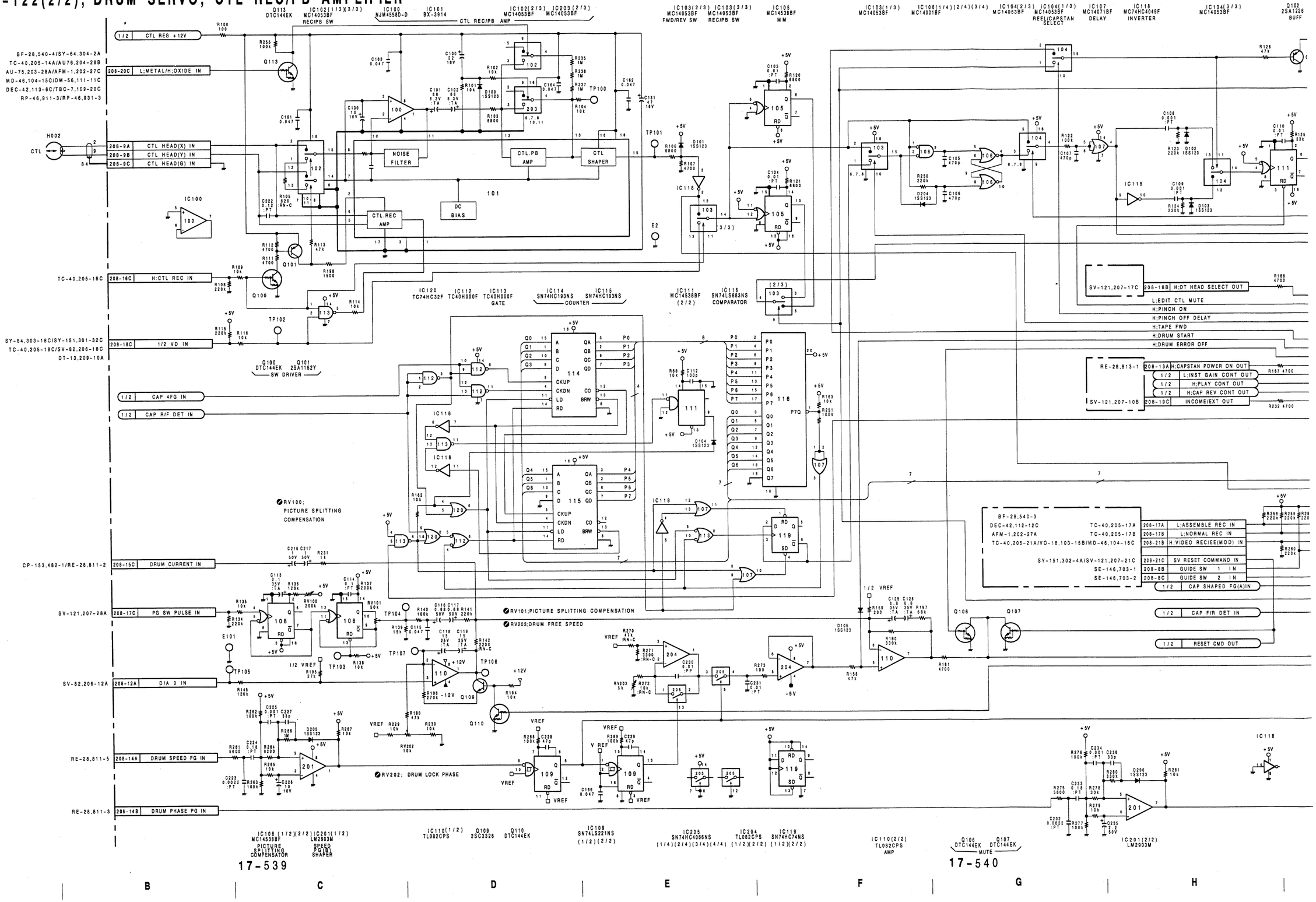

SV-122(2/2)

IC205(2/3) MC14053BF
IC103(2/3) MC14053BF FWD/REV SW
IC103(3/3) MC14053BF REC/PB SW
IC105 MC14538BF MM
IC103(1/3) MC14053BF
IC106(1/4)(2/4)(3/4) MC14001BF
IC104(2/3) MC14053BF
IC104(1/3) MC14053BF REEL/CAPSTAN SELECT
IC107 MC14071BF DELAY
IC118 MC74HC4049F INVERTER
IC104(3/3) MC14053BF
Q102 2SA1226 BUFF
IC111(1/2)Q103 MC14538BF DTC144EK EDIT CTL GEN
I/O EXPENDER IC117 CXD1095Q

TAPE DIRECTION OUT 208-16A → TBC-7,109-2B/DM-56,111-7A, SY-151,302-4B/SY-64,303-25B
CAPSTAN FWD/REV DET OUT 208-23C → SV-82,206-24A
EDIT CTL OUT 208-10A → SY-151,302-4C/SY-64,303-25A
INTERPOLATE CTL OUT 208-10B → SY-64,303-23B
SWITCHED CTL OUT 208-11A → DT-13,209-11A, SV-82,206-11A

SV-121,207-17C 208-18B H;DT HEAD SELECT OUT
L;EDIT CTL MUTE
H;PINCH ON
H;PINCH OFF DELAY
H;TAPE FWD
H;DRUM START
H;DRUM ERROR OFF

RE-28,813-1 208-13A H;CAPSTAN POWER ON OUT
1/2 L;INST GAIN CONT OUT
1/2 H;PLAY CONT OUT
1/2 H;CAP REV CONT OUT
SV-121,207-10B 208-19C INCOME/EXT OUT

SYSTEM 7 OUT 208-8A → DT-13,209-7B
SYSTEM 6 OUT 208-7C → DT-13,209-7A
SYSTEM 5 OUT 208-7B → DT-13,209-6C
SYSTEM 4 OUT 208-7A → DT-13,209-6B
SYSTEM 3 OUT 208-6C → DT-13,209-6A
SYSTEM 2 OUT 208-6B → DT-13,209-5C

SERVO RESET IN 208-29C → SV-82,206-29C / SV-121,207-29C, SE-146,703-4
L;WR IN 208-29B → SV-82,206-29B
L;RD IN 208-29A → SV-82,206-29A
L;CS IN 208-28C → SV-82,206-28C
A2 IN 208-28B → SV-82,206-28B
A1 IN 208-28A → SV-82,206-28A
A0 IN 208-27C → SV-82,206-27C

D7 IN/OUT 208-27B → SV-82,206-27B
D6 IN/OUT 208-27A → SV-82,206-27A
D5 IN/OUT 208-26C → SV-82,206-26C
D4 IN/OUT 208-26B → SV-82,206-26B
D3 IN/OUT 208-26A → SV-82,206-26A
D2 IN/OUT 208-25C → SV-82,206-25C
D1 IN/OUT 208-25B → SV-82,206-25B
D0 IN/OUT 208-25A → SV-82,206-25A

BF-28,540-3
DEC-42,112-12C TC-40,205-17A 208-17A L;ASSEMBLE REC IN
AFM-1,202-27A TC-40,205-17B 208-17B L;NORMAL REC IN
TC-40,205-21A/VO-18,103-15B/MD-46,104-16C 208-21B H;VIDEO REC/EE(MOD) IN
SY-151,302-4A/SV-121,207-21C 208-21C SV RESET COMMAND IN
SE-146,703-1 208-8B GUIDE SW 1 IN
SE-146,703-2 208-8C GUIDE SW 2 IN
1/2 CAP SHAPED FG(A)IN
1/2 CAP F/R DET IN
1/2 RESET CMD OUT

DRUM ERROR OUT 208-15B → RE-28,811-1
REG -5V OUT 208-13C → RE-28,811-7
DRUM SHAPED SPEED FG IN 208-15A → SV-121,207-12B
DRUM SHAPED PHASE PG IN 208-14C → SV-121,207-12A

IC109 SN74LS221NS (1/2)(2/2)
IC205 SN74HC4066NS (1/4)(2/4)(3/4)(4/4)
IC204 TL082CPS (1/2)(2/2)
IC119 SN74HC74NS (1/2)(2/2)
IC110(2/2) TL082CPS AMP
Q106 DTC144EK MUTE
Q107 DTC144EK
IC201(2/2) LM2903M
IC120 SN74HC32NS
IC203 MC14053BF (1/3)(3/3) REEL/CAPSTAN SELECT
IC115 SN74HC193NS NTER
IC111 MC14538BF (2/2)
IC118 SN74LS683NS COMPARATOR

SV-122 BOARD (2/2)
BOARD NO.1-635-400-11,12
BVW-85P(EK) ;#10001-

SV-122; CAPSTAN/DRUM SERVO

SV-122(1-635-400-11,12)
BVW-85P

CN208	A-5	*Q102	K-8
		*Q103	J-5
*D1	C-3	*Q106	D-1
*D2	C-3	*Q107	D-1
*D4	G-2	*Q108	F-2
*D5	G-2	*Q109	F-5
*D100	F-7	*Q110	G-5
*D101	J-3	*Q111	B-3
*D102	K-6	*Q113	B-6
*D103	K-5		
*D104	K-5	RV1	D-3
*D105	E-6	RV2	E-1
*D204	J-6	RV3	E-2
*D205	C-5	RV4	F-3
*D206	C-5	RV100	G-7
		RV101	G-8
E1	E-1	RV202	L-4
E2	L-7	RV203	E-5
E101	H-8		
		TP1	F-1
IC1	C-3	TP2	G-2
IC2	E-3	TP3	F-4
IC3	G-3	TP4	G-4
IC4	E-2	TP5	G-4
IC5	D-3	TP6	G-4
IC6	F-3	TP100	F-6
IC7	F-2	TP101	E-7
IC8	G-2	TP102	L-7
IC100	D-7	TP103	G-7
IC101	E-7	TP104	G-7
IC102	C-7	TP105	F-6
IC103	J-7	TP106	F-5
IC104	K-6	TP107	F-5
IC105	H-6		
IC106	K-7		
IC107	H-4		
IC108	F-7		
IC109	D-4		
IC110	F-5		
IC111	K-5		
IC112	H-3		
IC113	K-3		
IC114	H-2		
IC115	K-1		
IC116	J-1		
IC117	C-2		
IC118	K-4		
IC119	H-5		
IC120	K-2		
IC201	C-6		
IC203	F-7		
IC204	E-5		
IC205	D-6		
*Q1	E-3		
*Q2	F-3		
*Q3	G-3		
*Q4	G-4		
*Q5	F-4		
*Q100	B-7		
*Q101	B-7		

* : SOLDERING SIDE

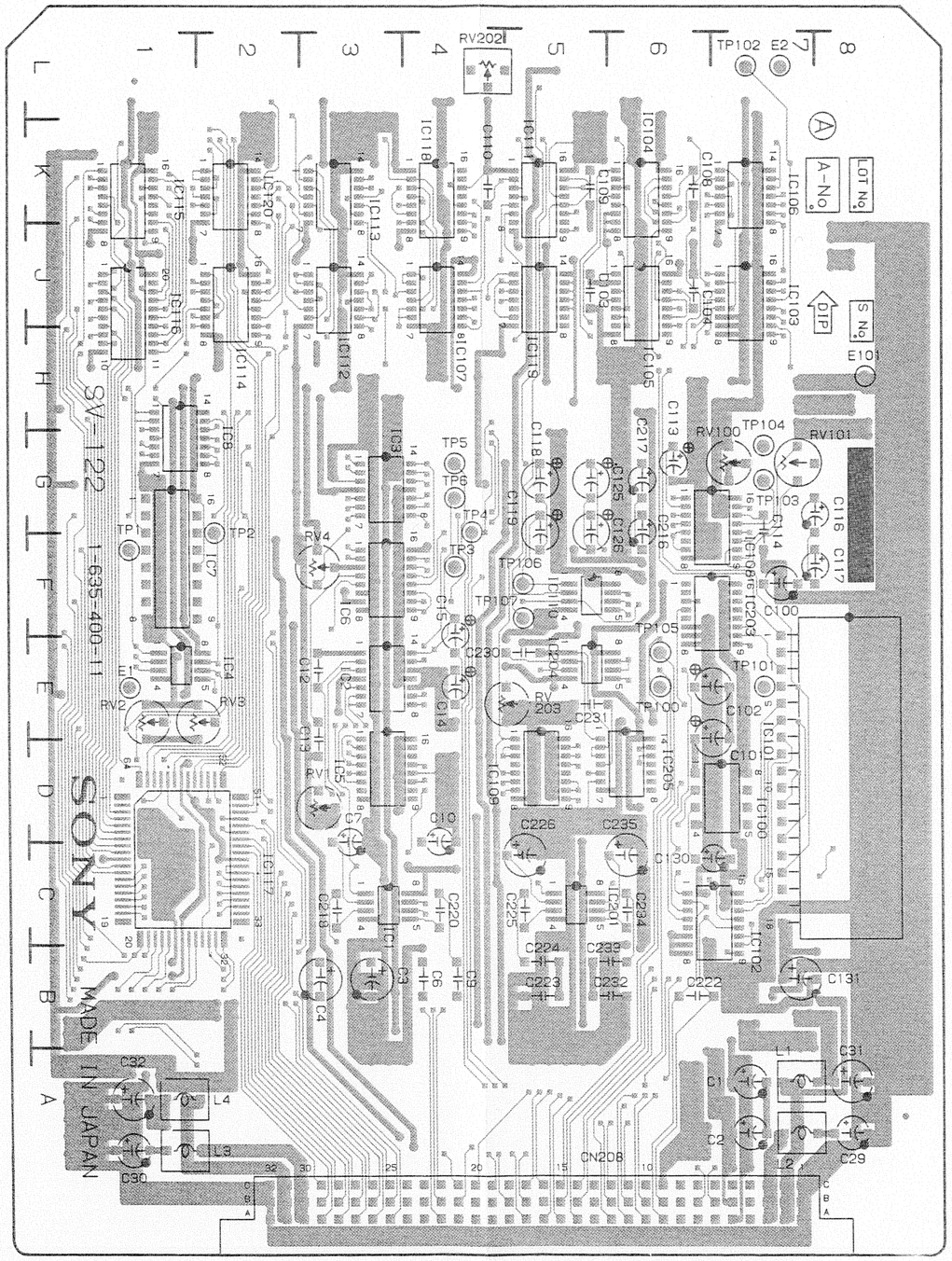

SV-122 1-635-400-11, 12 A SIDE

A Side is the same as Component Side.

SV-122; CAPSTAN/DRUM SERVO

1,12)

2 K-8
3 J-5
6 D-1
7 D-1
8 F-2
9 F-5
0 G-5
1 B-3
3 B-6

D-3
E-1
E-2
F-3
00 G-7
01 G-8
02 L-4
03 E-5

F-1
G-2
F-4
G-4
G-4
G-4
00 F-6
01 E-7
02 L-7
03 G-7
04 G-7
05 F-6
06 F-5
07 F-5

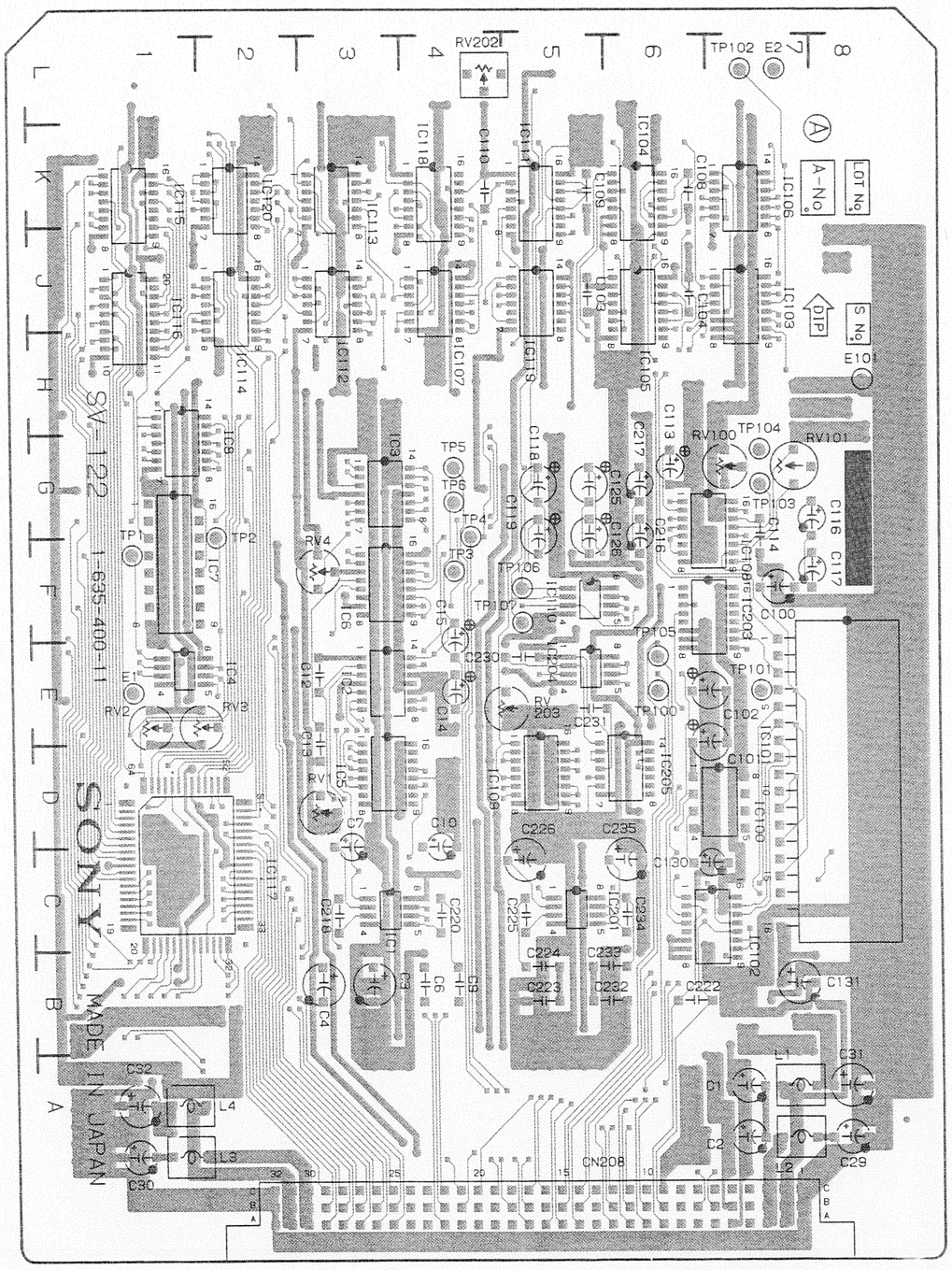

SV-122 1-635-400-11, 12 A SIDE

A Side is the same as Component Side.

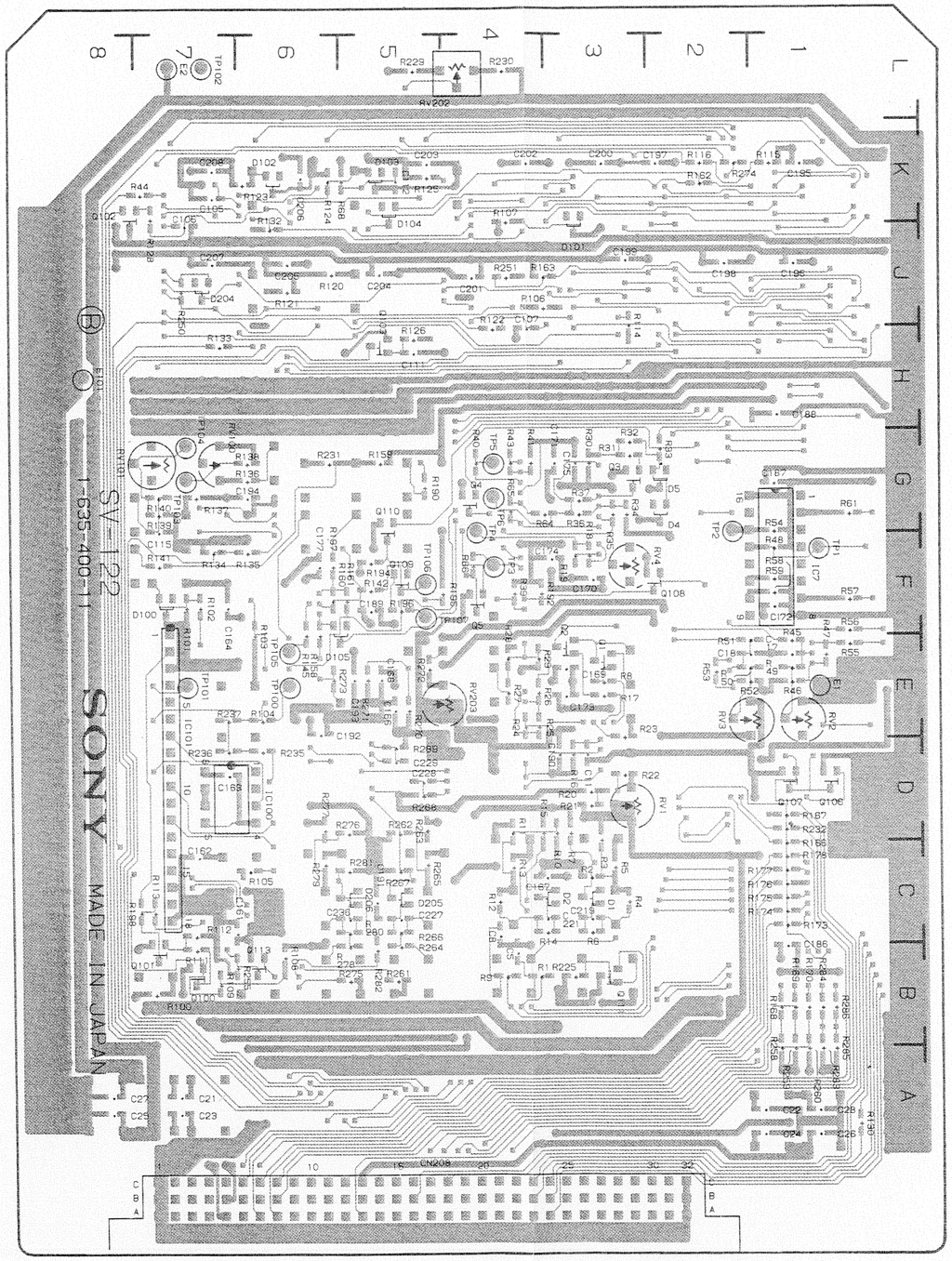

SV-122 1-635-400-11, 12 B SIDE

B Side is the same as Solder Side.

NG SIDE

RE-28PC; CAPSTAN/DRUM MOTOR DRIVER
PTC-20; CASSETTE DETECTOR
PTC-21; REEL TABLE POSITION DETECTOR
PTC-23; REC INHIBIT DETECTOR
PTC-36; CASSETTE DETECTOR
DR-56; CAPSTAN/REEL MOTOR DRIVER & DRUM ERROR AMPLIFIER

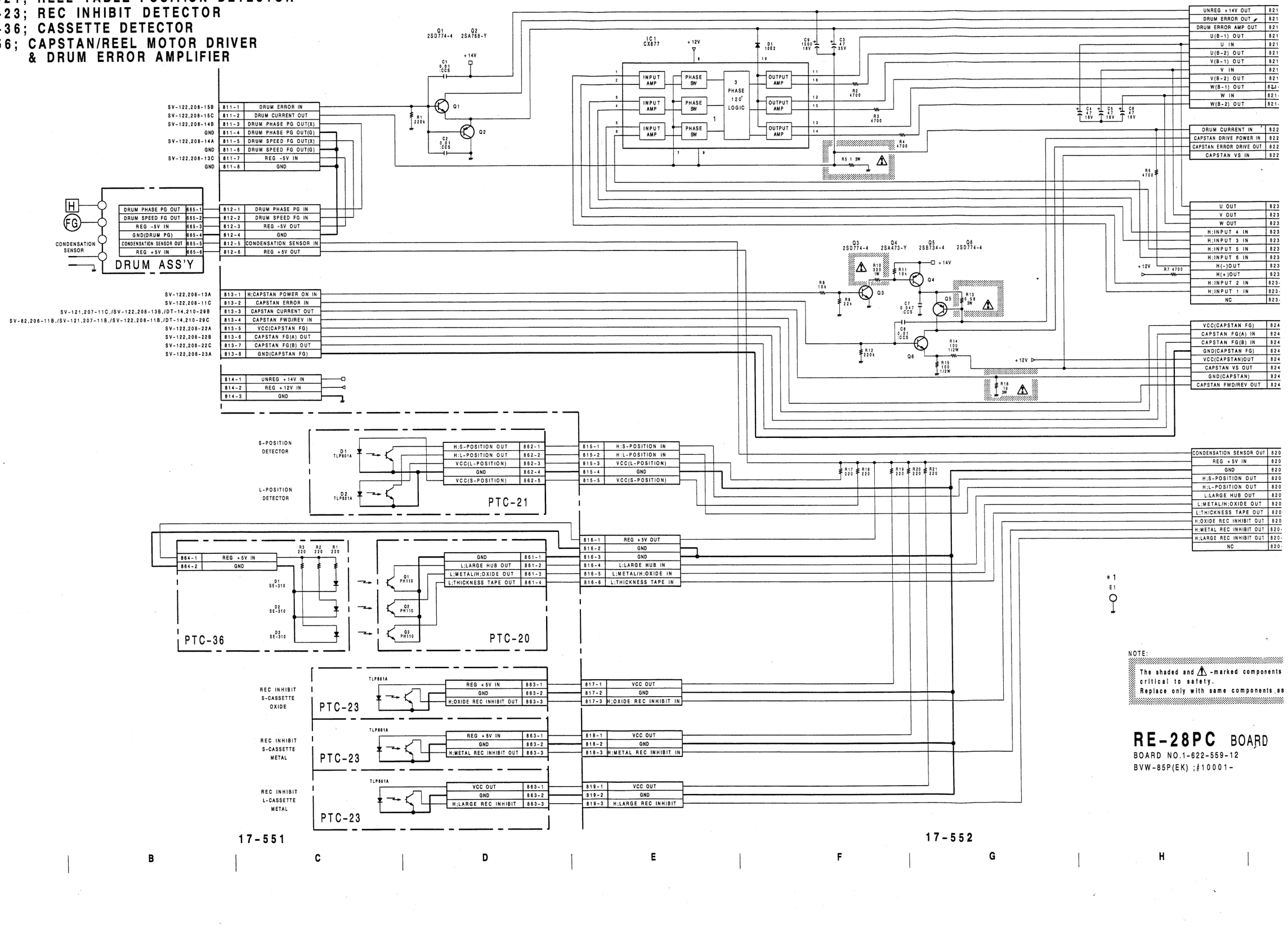

NOTE:
The shaded and ⚠-marked components are critical to safety.
Replace only with same components as

RE-28PC BOARD
BOARD NO.1-622-559-12
BVW-85P(EK) ;#10001-

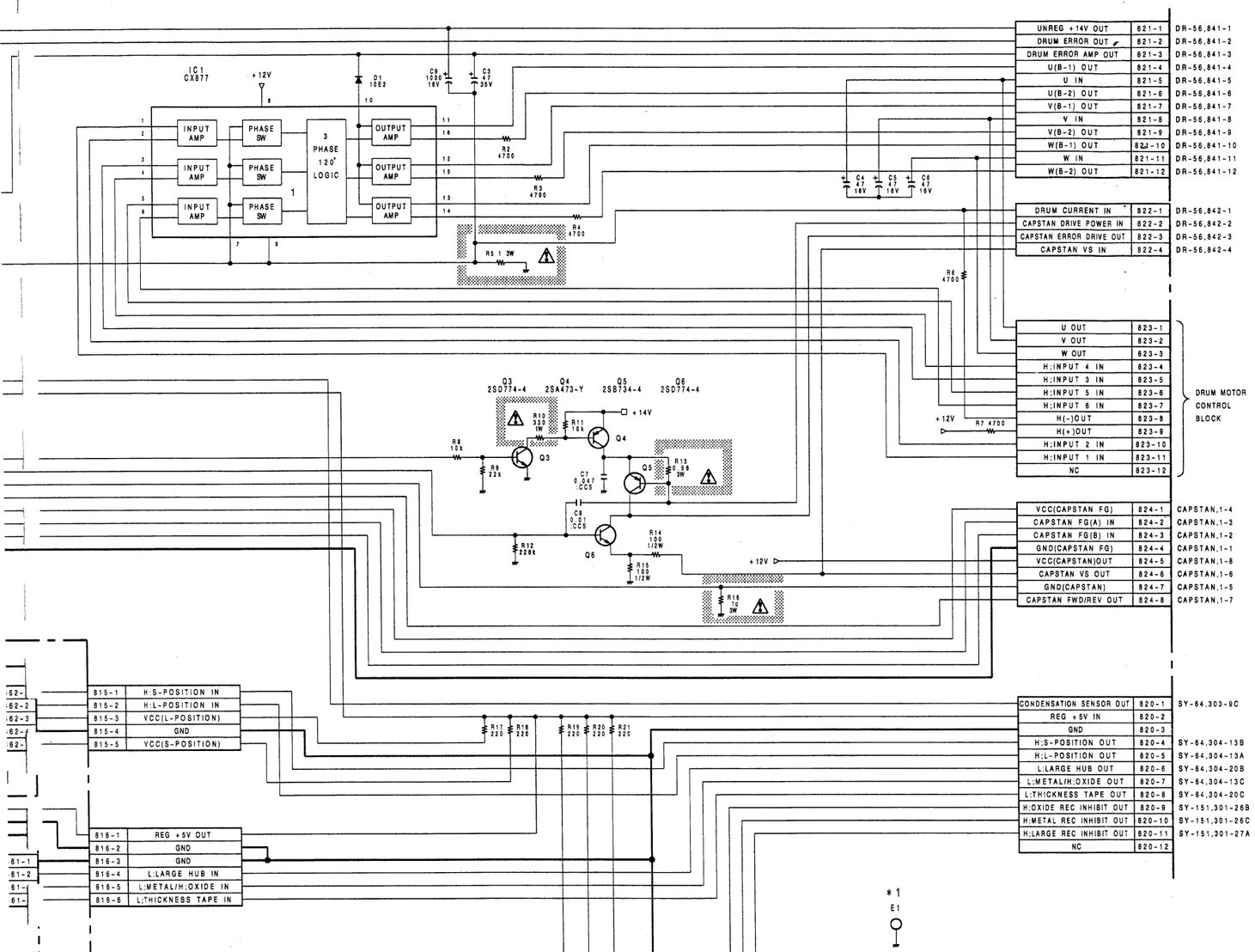

UNREG +14V OUT	821-1	DR-56,841-1
DRUM ERROR OUT	821-2	DR-56,841-2
DRUM ERROR AMP OUT	821-3	DR-56,841-3
U(B-1) OUT	821-4	DR-56,841-4
U IN	821-5	DR-56,841-5
U(B-2) OUT	821-6	DR-56,841-6
V(B-1) OUT	821-7	DR-56,841-7
V IN	821-8	DR-56,841-8
V(B-2) OUT	821-9	DR-56,841-9
W(B-1) OUT	821-10	DR-56,841-10
W IN	821-11	DR-56,841-11
W(B-2) OUT	821-12	DR-56,841-12

DRUM CURRENT IN	822-1	DR-56,842-1
CAPSTAN DRIVE POWER IN	822-2	DR-56,842-2
CAPSTAN ERROR DRIVE OUT	822-3	DR-56,842-3
CAPSTAN VS IN	822-4	DR-56,842-4

U OUT	823-1	DRUM MOTOR CONTROL BLOCK
V OUT	823-2	
W OUT	823-3	
H;INPUT 4 IN	823-4	
H;INPUT 3 IN	823-5	
H;INPUT 5 IN	823-6	
H;INPUT 6 IN	823-7	
H(-)OUT	823-8	
H(+)OUT	823-9	
H;INPUT 2 IN	823-10	
H;INPUT 1 IN	823-11	
NC	823-12	

VCC(CAPSTAN FG)	824-1	CAPSTAN,1-4
CAPSTAN FG(A) IN	824-2	CAPSTAN,1-3
CAPSTAN FG(B) IN	824-3	CAPSTAN,1-2
GND(CAPSTAN FG)	824-4	CAPSTAN,1-1
VCC(CAPSTAN)OUT	824-5	CAPSTAN,1-8
CAPSTAN VS OUT	824-6	CAPSTAN,1-6
GND(CAPSTAN)	824-7	CAPSTAN,1-5
CAPSTAN FWD/REV OUT	824-8	CAPSTAN,1-7

CONDENSATION SENSOR OUT	820-1	SY-64,303-9C
REG +5V IN	820-2	
GND	820-3	
H;S-POSITION OUT	820-4	SY-64,304-13B
H;L-POSITION OUT	820-5	SY-64,304-13A
L;LARGE HUB OUT	820-6	SY-64,304-20B
L;METAL/H;OXIDE OUT	820-7	SY-64,304-13C
L;THICKNESS TAPE OUT	820-8	SY-64,304-20C
H;OXIDE REC INHIBIT OUT	820-9	SY-151,301-26B
H;METAL REC INHIBIT OUT	820-10	SY-151,301-26C
H;LARGE REC INHIBIT OUT	820-11	SY-151,301-27A
NC	820-12	

815-1	H;S-POSITION IN	
815-2	H;L-POSITION IN	
815-3	VCC(L-POSITION)	
815-4	GND	
815-5	VCC(S-POSITION)	

816-1	REG +5V OUT	
816-2	GND	
816-3	GND	
816-4	L;LARGE HUB IN	
816-5	L;METAL/H;OXIDE IN	
816-6	L;THICKNESS TAPE IN	

817-1	VCC OUT	
817-2	GND	
817-3	H;OXIDE REC INHIBIT IN	

818-1	VCC OUT	
818-2	GND	
818-3	H;METAL REC INHIBIT IN	

819-1	VCC OUT	
819-2	GND	
819-3	H;LARGE REC INHIBIT	

NOTE:

The shaded and ⚠-marked components are critical to safety. Replace only with same components as specified.

RE-28PC BOARD

BOARD NO.1-622-559-12

BVW-85P(EK) ;#10001-

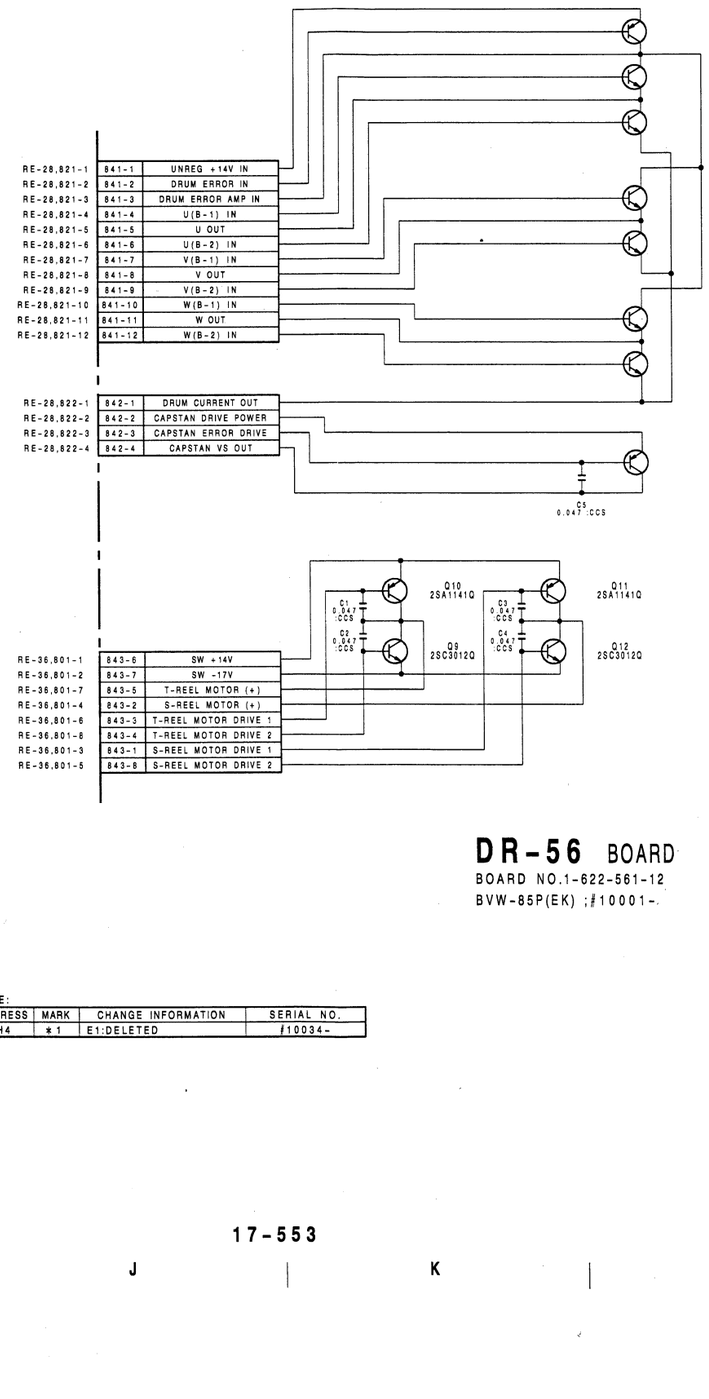

RE-28,821-1	841-1	UNREG +14V IN
RE-28,821-2	841-2	DRUM ERROR IN
RE-28,821-3	841-3	DRUM ERROR AMP IN
RE-28,821-4	841-4	U(B-1) IN
RE-28,821-5	841-5	U OUT
RE-28,821-6	841-6	U(B-2) IN
RE-28,821-7	841-7	V(B-1) IN
RE-28,821-8	841-8	V OUT
RE-28,821-9	841-9	V(B-2) IN
RE-28,821-10	841-10	W(B-1) IN
RE-28,821-11	841-11	W OUT
RE-28,821-12	841-12	W(B-2) IN

RE-28,822-1	842-1	DRUM CURRENT OUT
RE-28,822-2	842-2	CAPSTAN DRIVE POWER
RE-28,822-3	842-3	CAPSTAN ERROR DRIVE
RE-28,822-4	842-4	CAPSTAN VS OUT

RE-36,801-1	843-6	SW +14V
RE-36,801-2	843-7	SW -17V
RE-36,801-7	843-5	T-REEL MOTOR (+)
RE-36,801-4	843-2	S-REEL MOTOR (+)
RE-36,801-6	843-3	T-REEL MOTOR DRIVE 1
RE-36,801-8	843-4	T-REEL MOTOR DRIVE 2
RE-36,801-3	843-1	S-REEL MOTOR DRIVE 1
RE-36,801-5	843-8	S-REEL MOTOR DRIVE 2

NOTE:

ADDRESS	MARK	CHANGE INFORMATION	SERIAL NO.
H4	*1	E1:DELETED	#10034-

DR-56 BOARD

BOARD NO.1-622-561-12

BVW-85P(EK) ;#10001-

RE-28PC(1-622-559-12)
BVW-85P

CN811	C-2
CN812	C-2
CN813	D-2
CN814	B-2
CN815	C-1
CN816	D-1
CN817	C-1
CN818	D-1
CN819	D-1
CN820	D-1
CN821	A-1
CN822	A-2
CN823	B-1
CN824	A-2
D1	B-1
IC1	B-1
Q1	D-2
Q2	D-1
Q3	D-2
Q4	C-2
Q5	B-2
Q6	B-2

RE-28PC; CAPSTAN/DRUM MOTOR DRIVER
PTC-20; CASSETTE DETECTOR
PTC-21; REEL TABLE POSITION DETECTOR
PTC-23; REC INHIBIT DETECTOR
PTC-36; CASSETTE DETECTOR
DR-56; CAPSTAN/REEL MOTOR DRIVER,DRUM ERROR AMPLIFIER

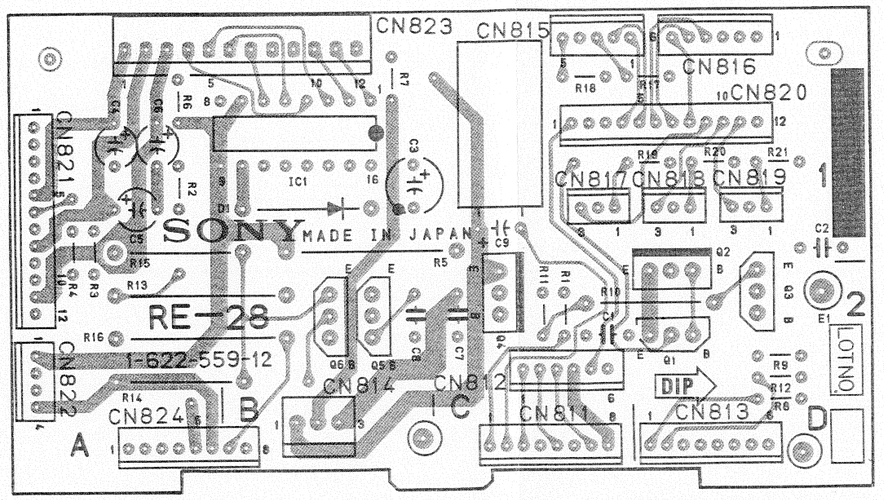

RE-28PC 1-622-559-12 COMPONENT SIDE

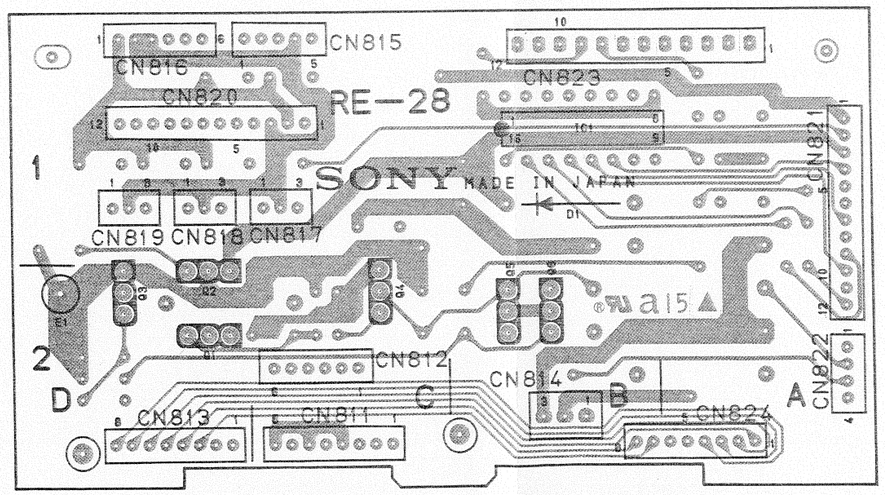

RE-28PC 1-622-559-12 SOLDER SIDE

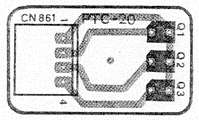

PTC-20 1-622-598-11
COMPONENT SIDE

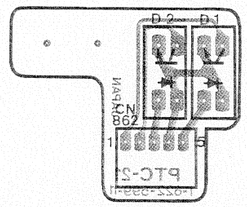

PTC-21 1-622-599-11 COMPONENT SIDE

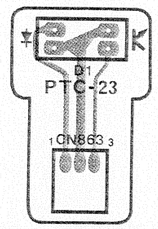

PTC-23 1-622-600-11
COMPONENT SIDE

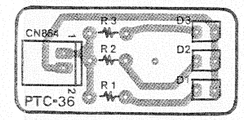

PTC-36 1-622-601-11 COMPONENT SIDE

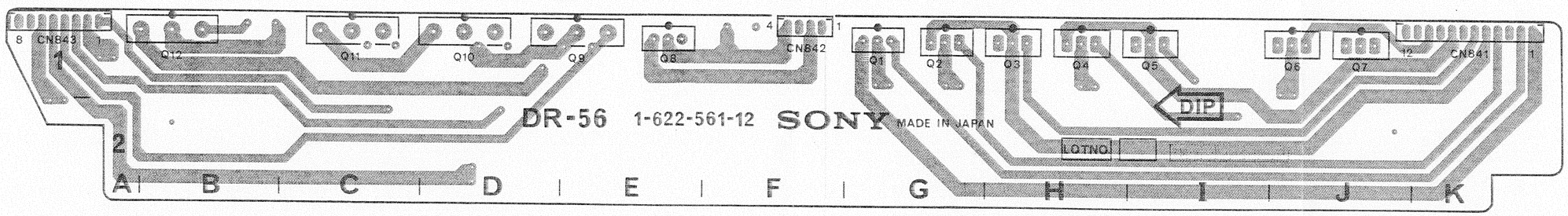

DR-56 1-622-561-12 COMPONENT SIDE

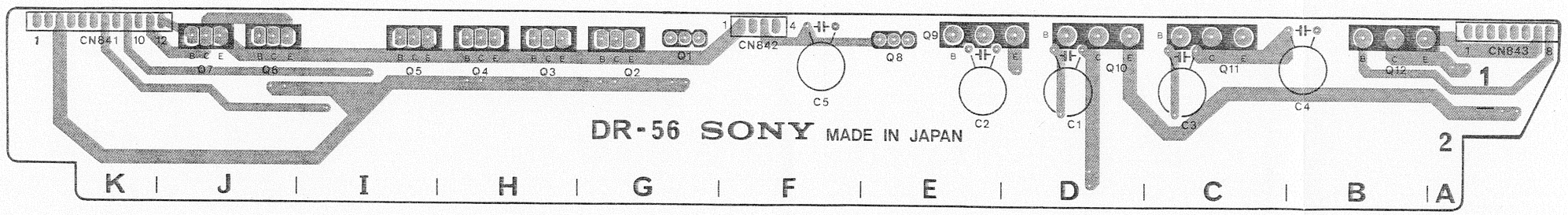

DR-56 1-622-561-12 SOLDER SIDE

RE-36,RM-40,DE-15,SE-146,PTC-31,40

RE-36; REEL MOTOR DRIVER
RM-40; REEL MOTOR
DE-15; REEL MOTOR FG
SE-146; THREADING MOTOR/MT GUIDE MOTOR CONTROL
PTC-31; THREADING MOTOR FG
PTC-40; MT GUIDE UP/DOWN SENSOR

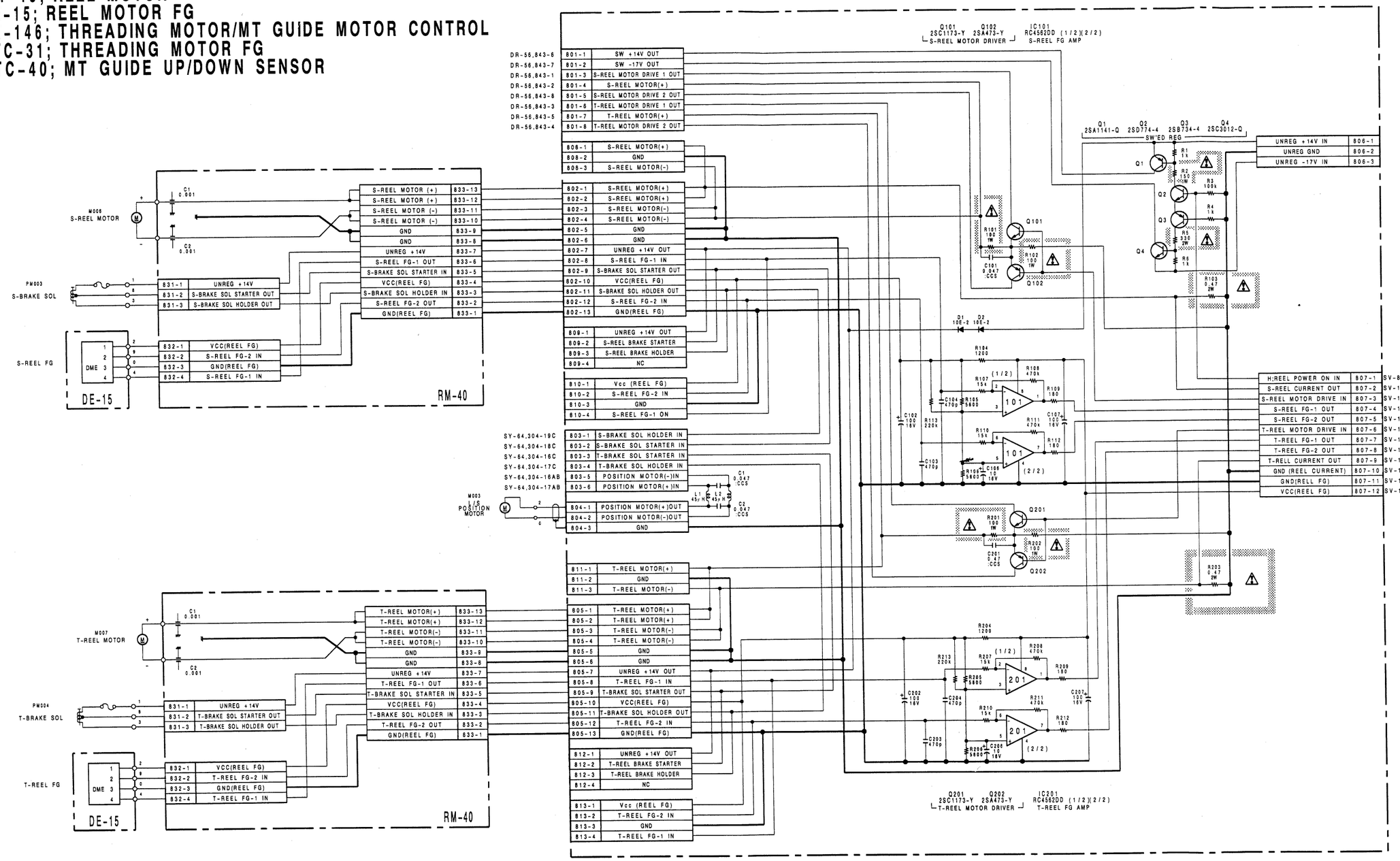

NOTE:

The shaded and ⚠ -marked components are critical to safety.
Replace only with same components as specified.

RE-36 BOARD

BOARD NO.1-622-560-11
BVW-85P(EK) ;#10001-

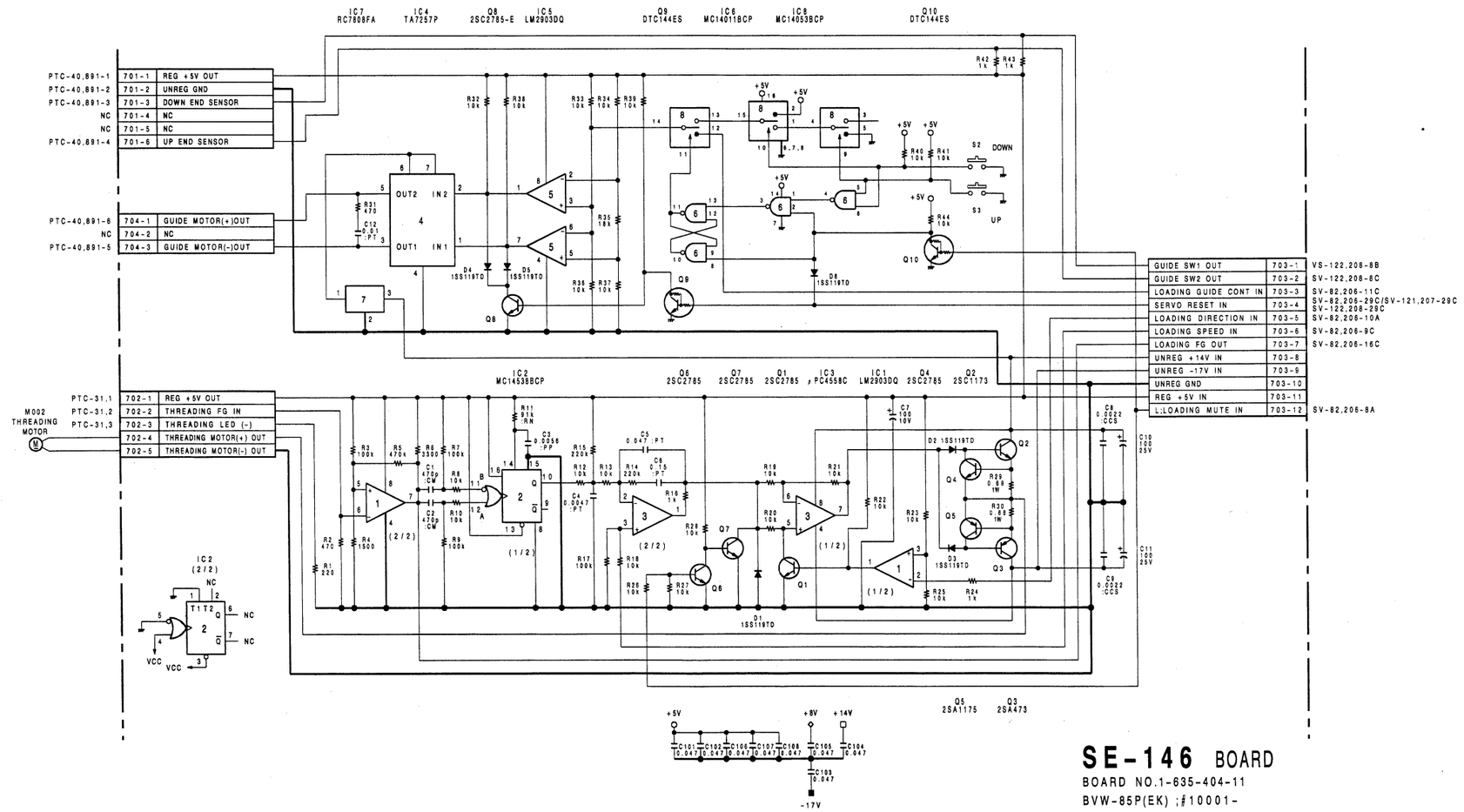

SE-146 BOARD

BOARD NO.1-635-404-11

BVW-85P(EK) ;#10001-

RE-36(1-622-560-11)

BVW-85P

CN801	C-1
CN802	J-1
CN803	H-1
CN804	H-1
CN805	A-1
CN806	H-2
CN807	D-1
D1	J-1
D2	J-2
IC101	D-2
IC201	D-2
Q1	G-2
Q2	F-2
Q3	E-2
Q4	G-2
Q101	C-1
Q102	C-1
Q201	C-2
Q202	C-2

RE-36; REEL MOTOR DRIVER
DE-15; REEL MOTOR FG
RM-40; REEL MOTOR
SE-146; THREADING MOTOR CONTROL
/MT GUIDE MOTOR CONTROL
PTC-31; THREADING MOTOR FG
PTC-40; MT GUIDE UP/DOWN SENSOR
TR-18; TAPE TENSION SENSOR

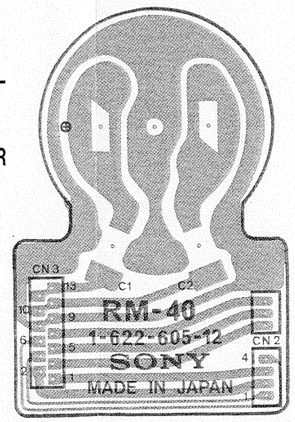

RM-40 1-622-605-12 COMPONENT SIDE

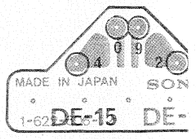

DE-15 1-622-606-12 COMPONEN

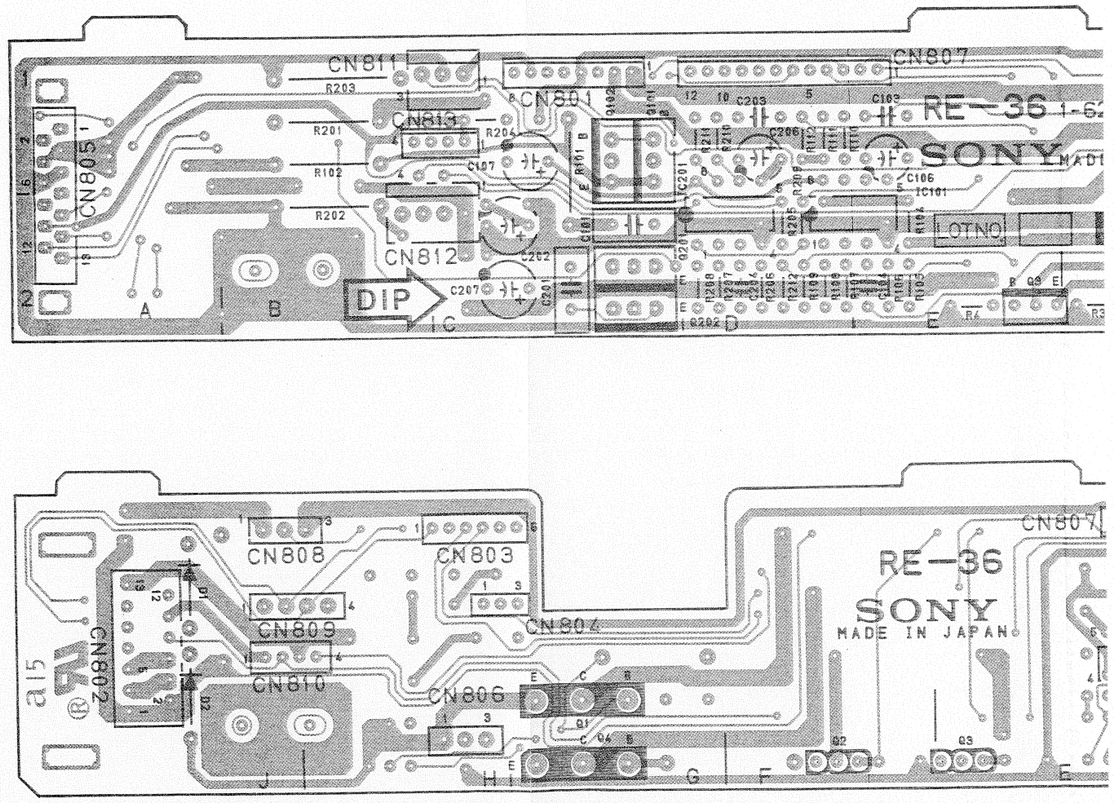

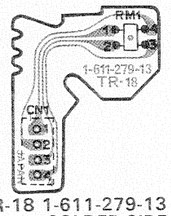

TR-18 1-611-279-13
SOLDER SIDE

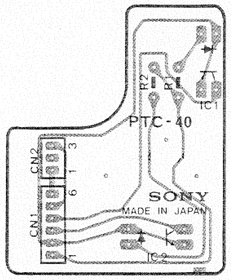

PTC-40 1-635-443-11 COMPONENT SIDE

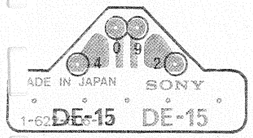

2- 6-12 COMPONENT SIDE

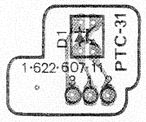

PTC-31 1-622-607-11
COMPONENT SIDE

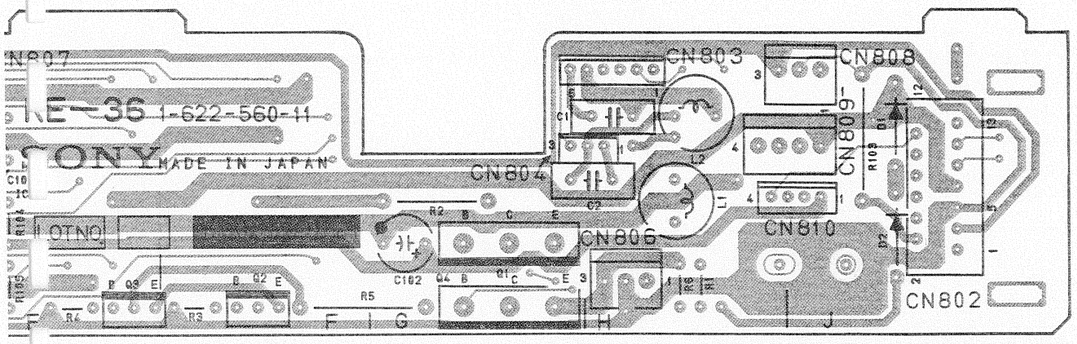

RE-36 1-622-560-11 COMPONENT SIDE

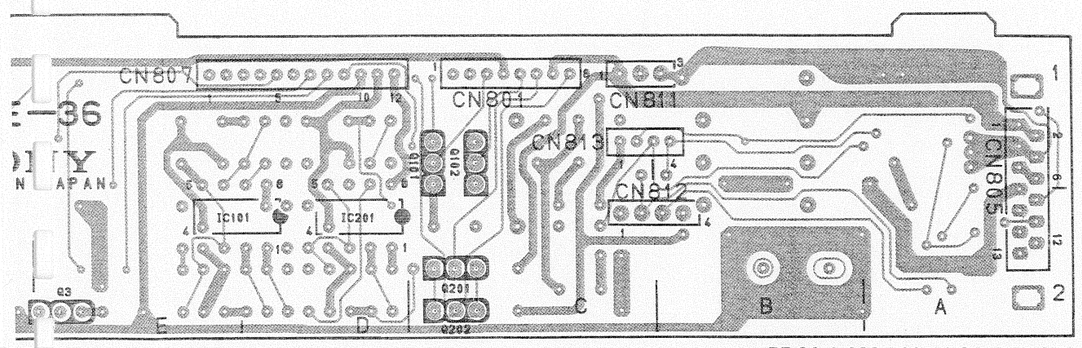

RE-36 1-622-560-11 SOLDER SIDE

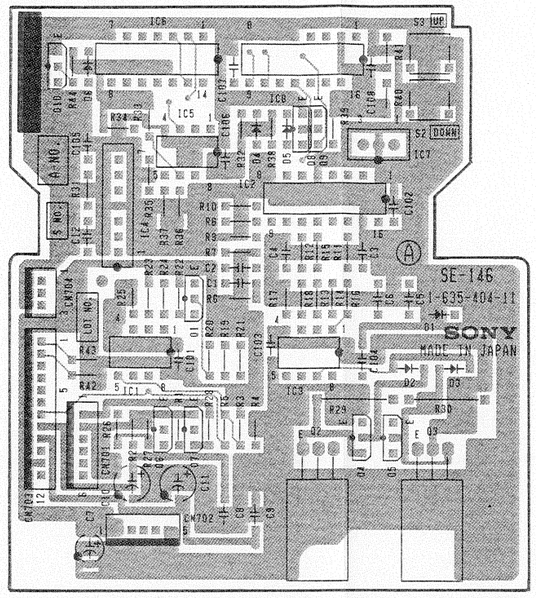

SE-146 1-635-404-11 A SIDE

A Side is the same as Component Side.

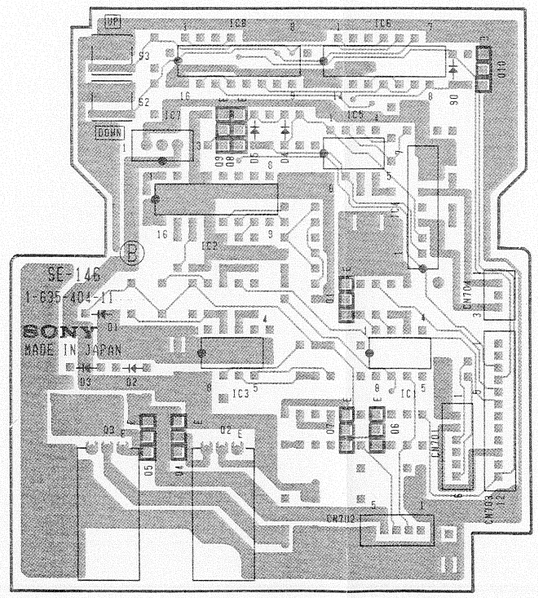

SE-146 1-635-404-11 B SIDE

B Side is the same as Solder Side.

DT-13PC; DYNAMIC TRACKING

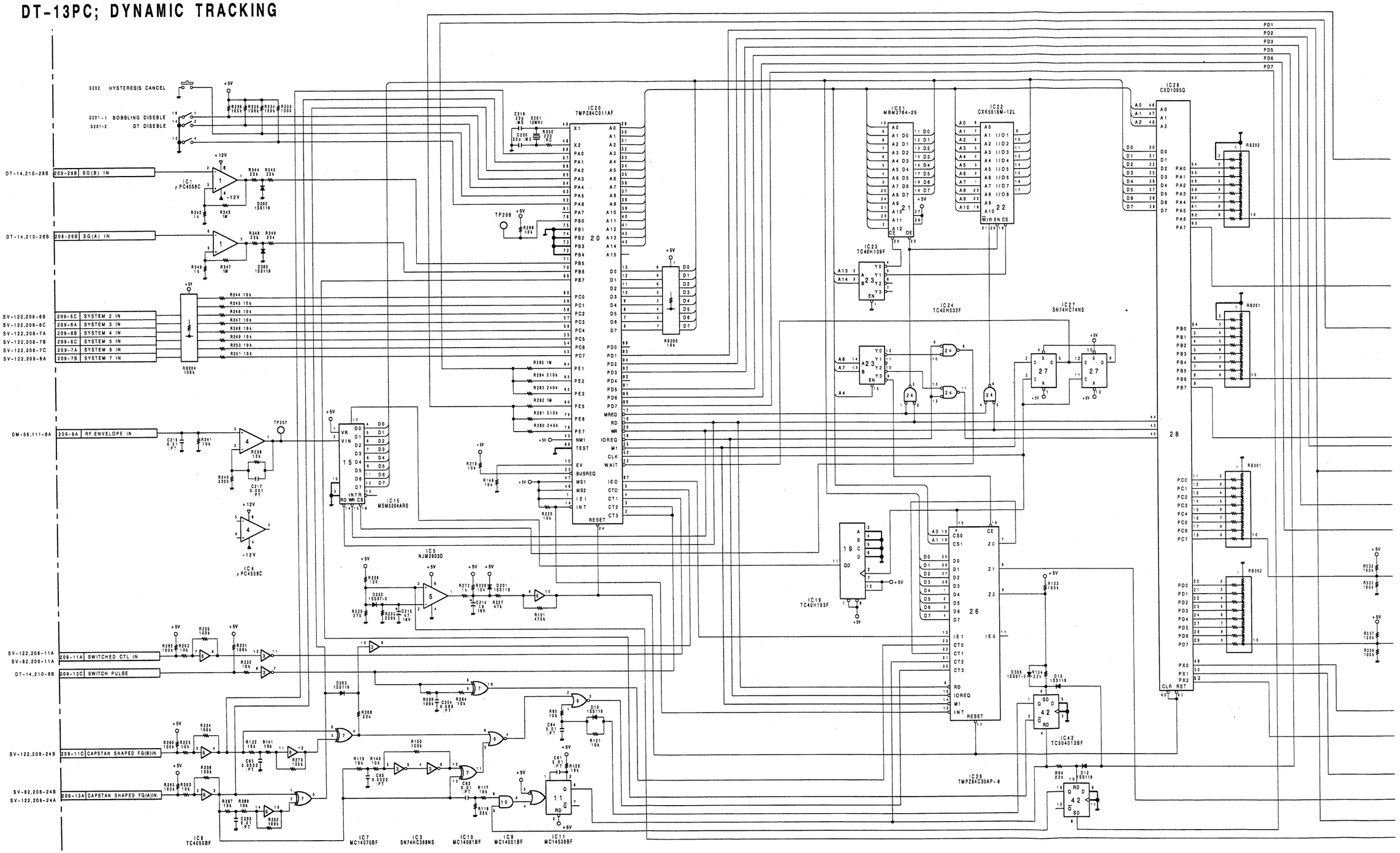

DT-13PC

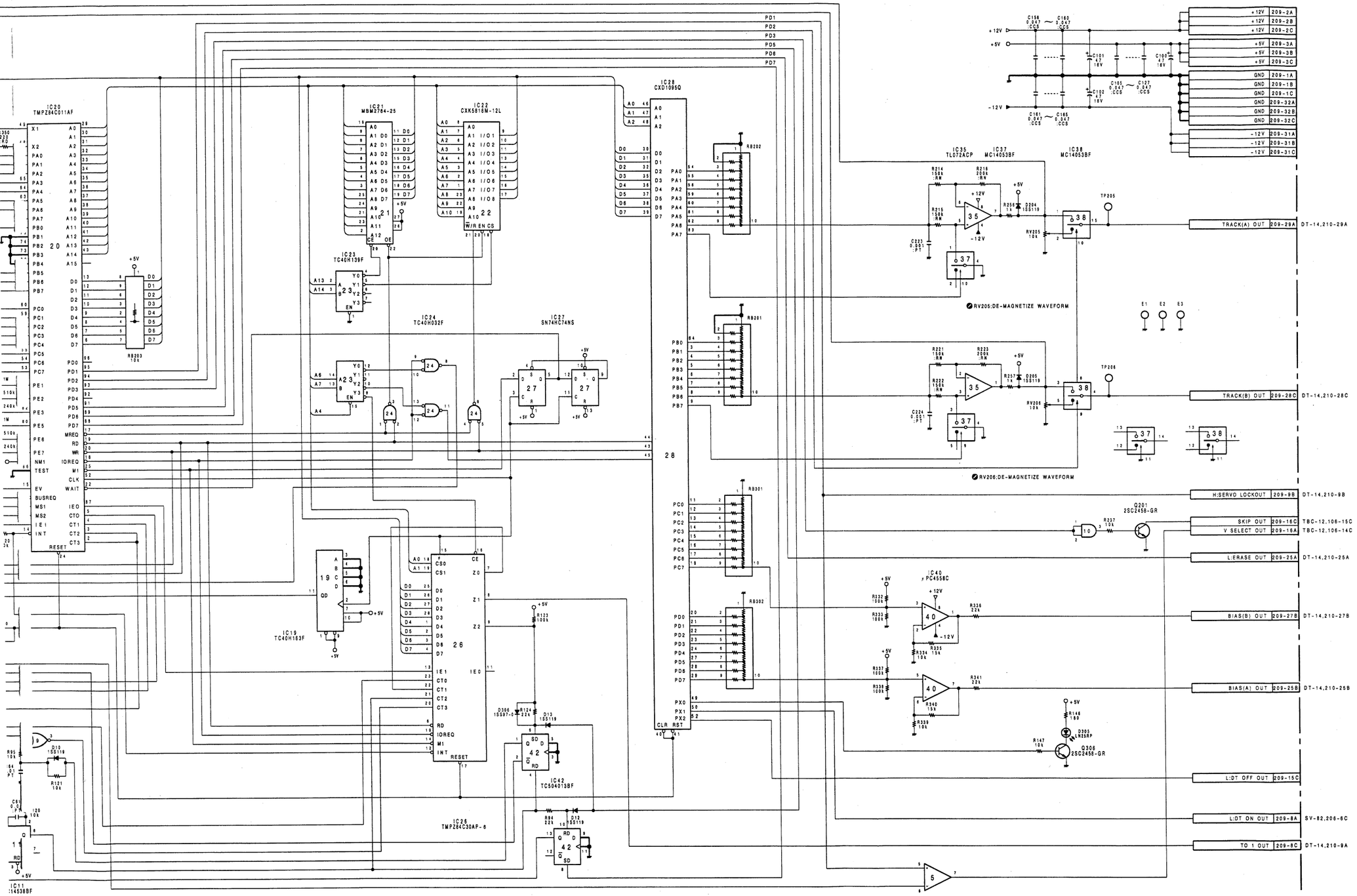

DT-13PC BOARD

BOARD NO.1-622-580-12

BVW-85P(EK) ;#10001-

17-582

17-583

DT-13PC(1-622-580-12)
BVW-85P

CN1	D-9
D10	D-7
D12	D-5
D13	D-5
D201	E-8
D202	B-8
D203	D-8
D204	B-7
D205	B-8
D302	B-9
D303	B-9
D305	D-1
D306	D-5
E1	F-1
E2	F-5
E3	F-9
IC1	C-9
IC3	D-7
IC4	F-9
IC5	B-7
IC6	D-9
IC7	D-7
IC9	D-6
IC10	F-7
IC11	E-6
IC15	B-6
IC19	A-1
IC20	D-2
IC22	A-3
IC23	B-1
IC24	C-1
IC26	B-3
IC27	D-1
IC28	A-5
IC35	A-8
IC37	A-9
IC38	B-9
IC40	C-9
IC42	C-6
Q201	F-8
Q306	B-1
RV205	A-9
RV206	B-8
S201	F-1
S202	E-1
TP205	A-9
TP206	B-9
TP207	E-9
TP208	F-1
X201	F-5

DT-13PC; DYNAMIC TRACKING

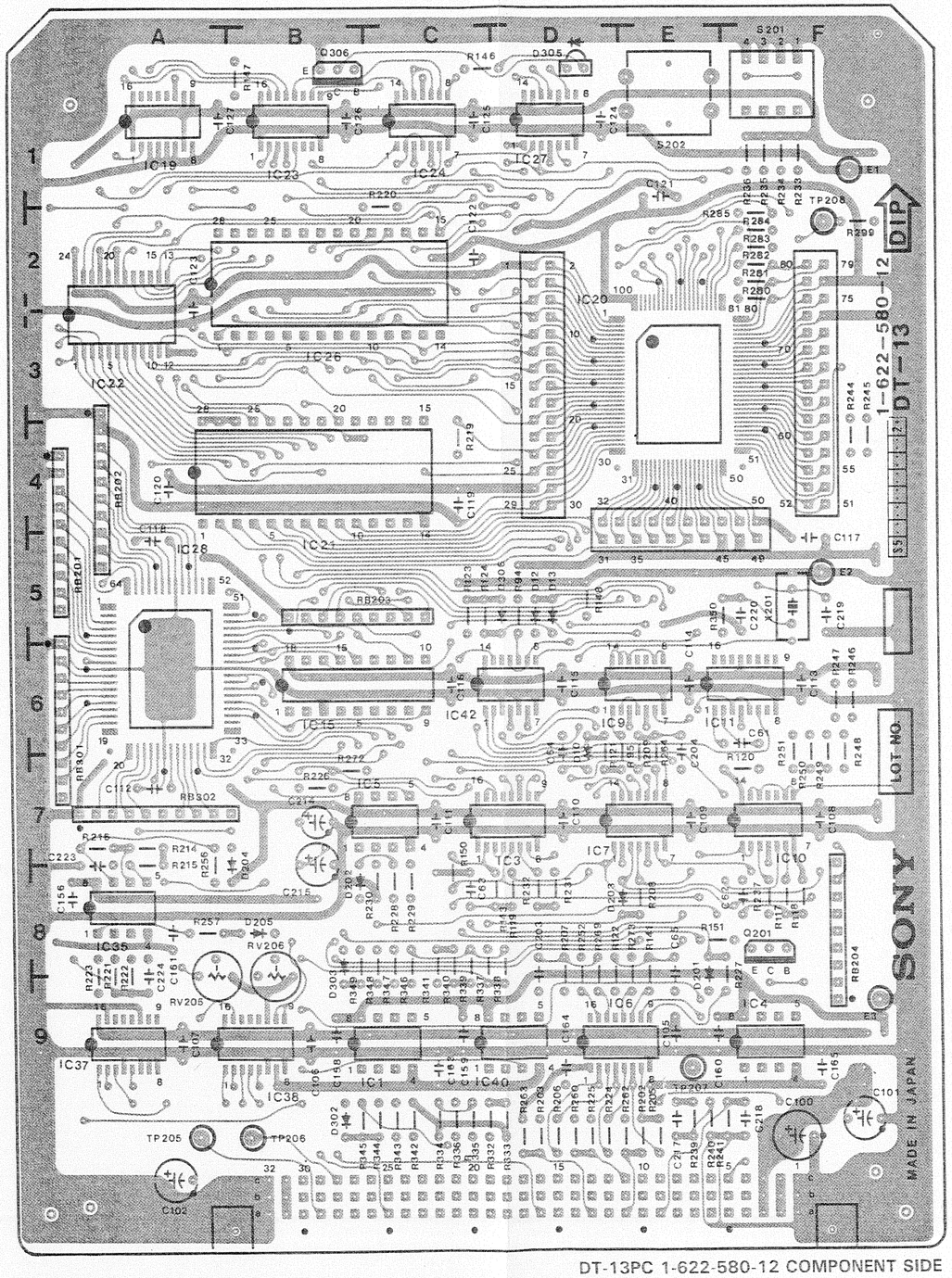

DT-13PC 1-622-580-12 COMPONENT SIDE

DT-13PC

580-12)

DT-13PC; DYNAMIC TRACKING

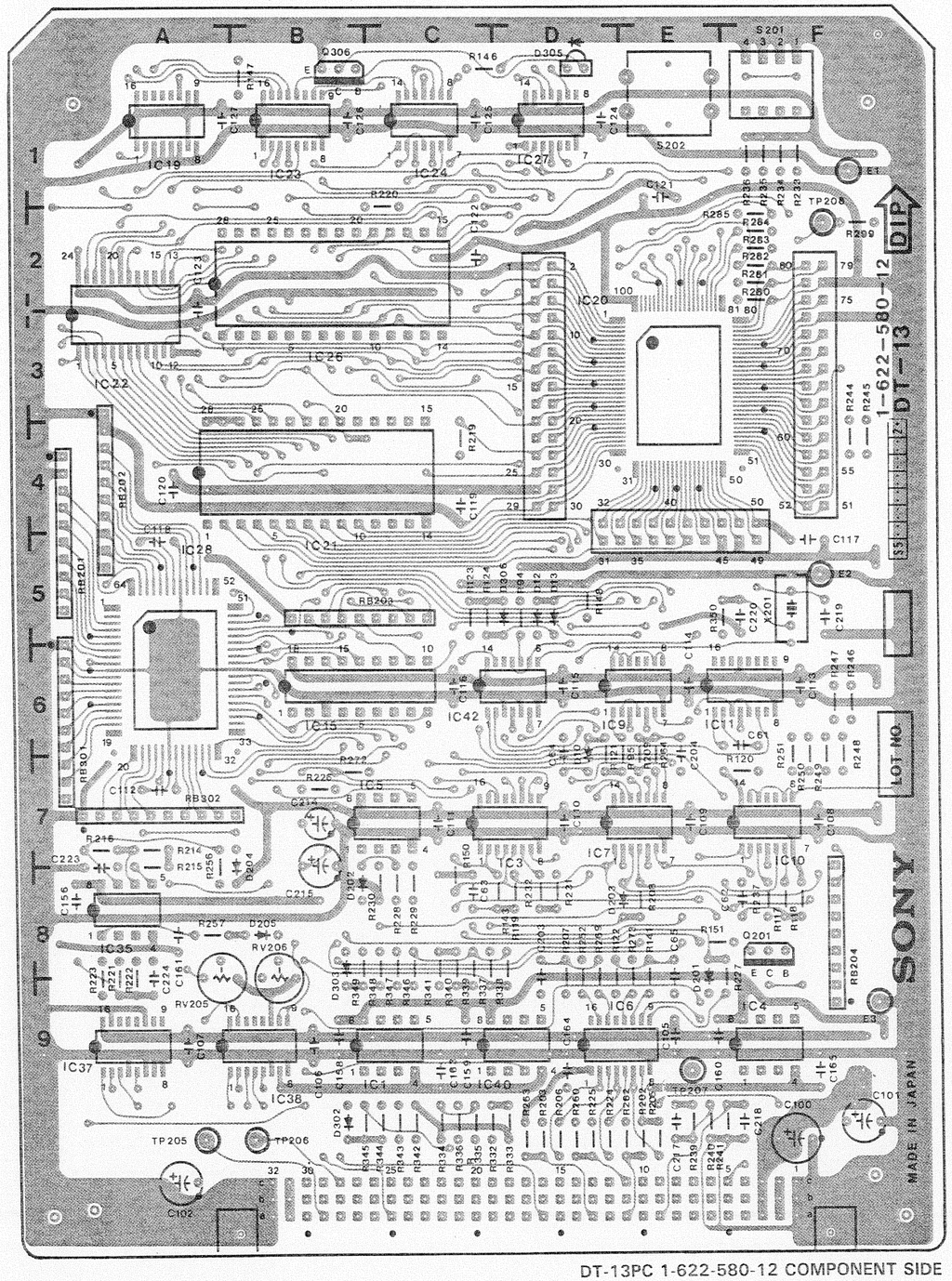

DT-13PC 1-622-580-12 COMPONENT SIDE

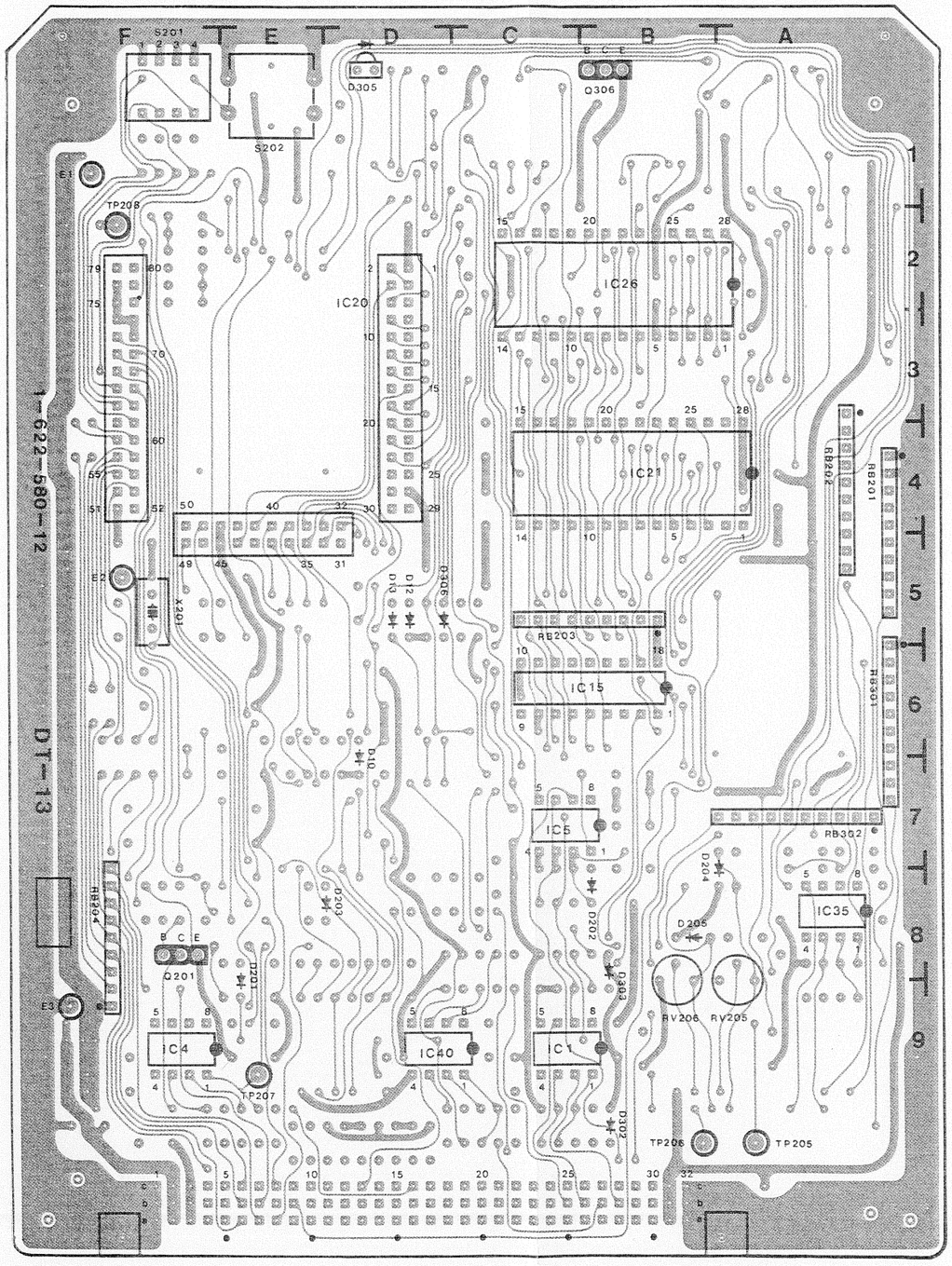

DT-13PC 1-622-580-12 SOLDER SIDE

DT-14PC(1/2); DT V GENERATOR

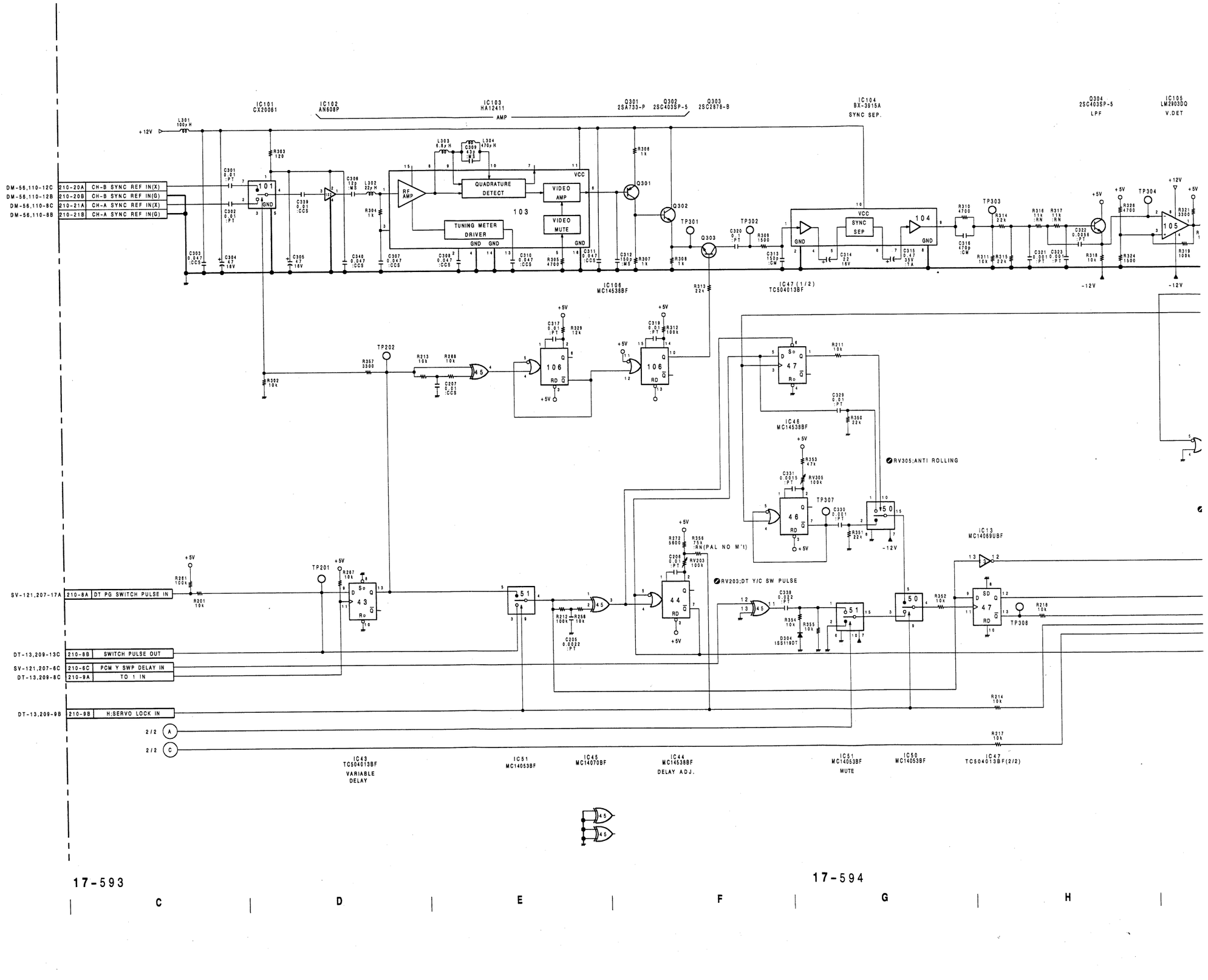

17-593 17-594

A B C D E F G H

DT-14PC(1/2)

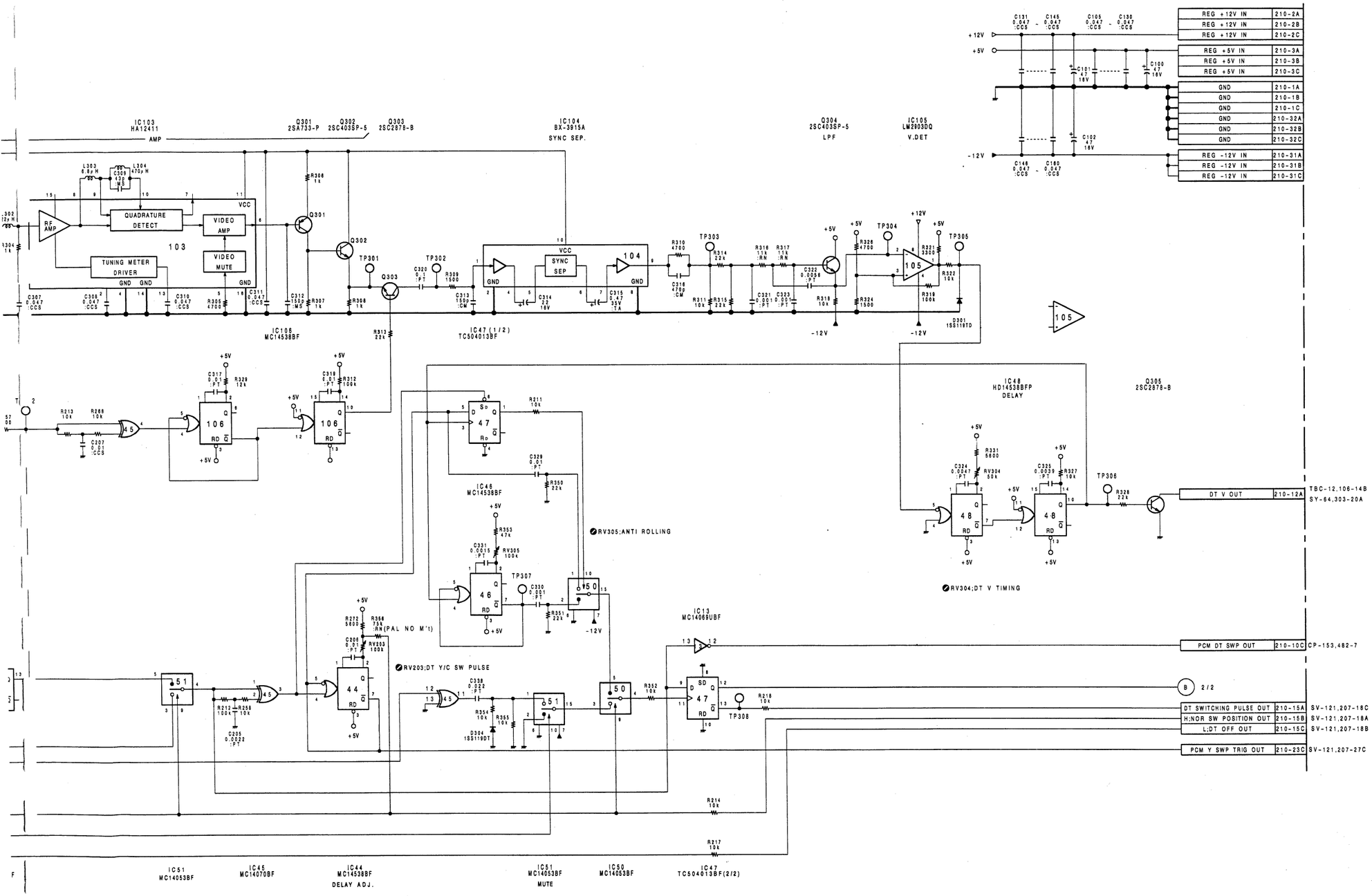

DT-14PC BOARD (1/2)

BOARD NO.1-622-581-11

BVW-85P(EK) ;#10001-

DT-14PC(2/2); AUTO OFFSET, HYSTERESIS CANCEL
DUS-282; STRAIN GAUGE BUFFER

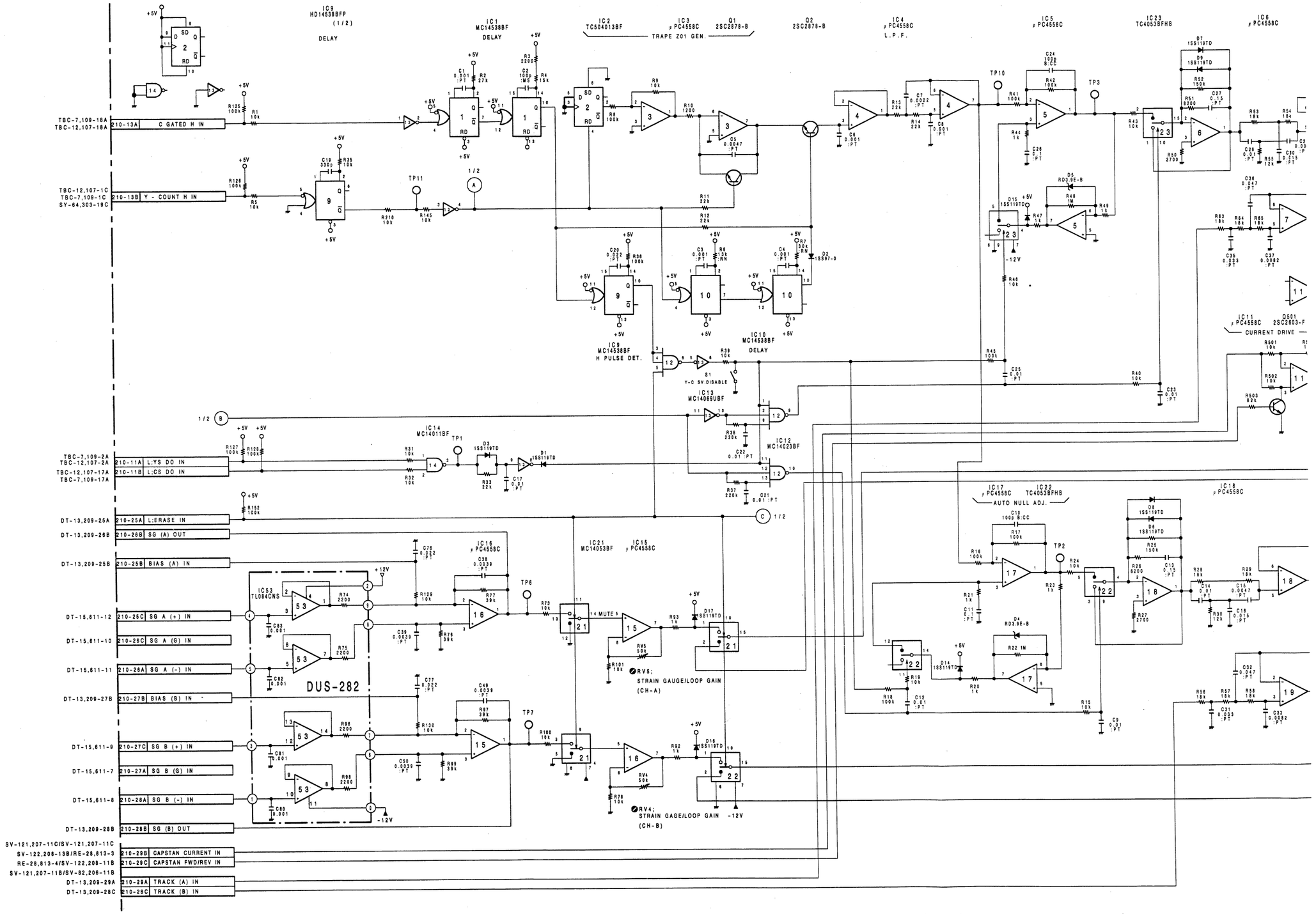

DUS-282 DT-14PC(2/2)

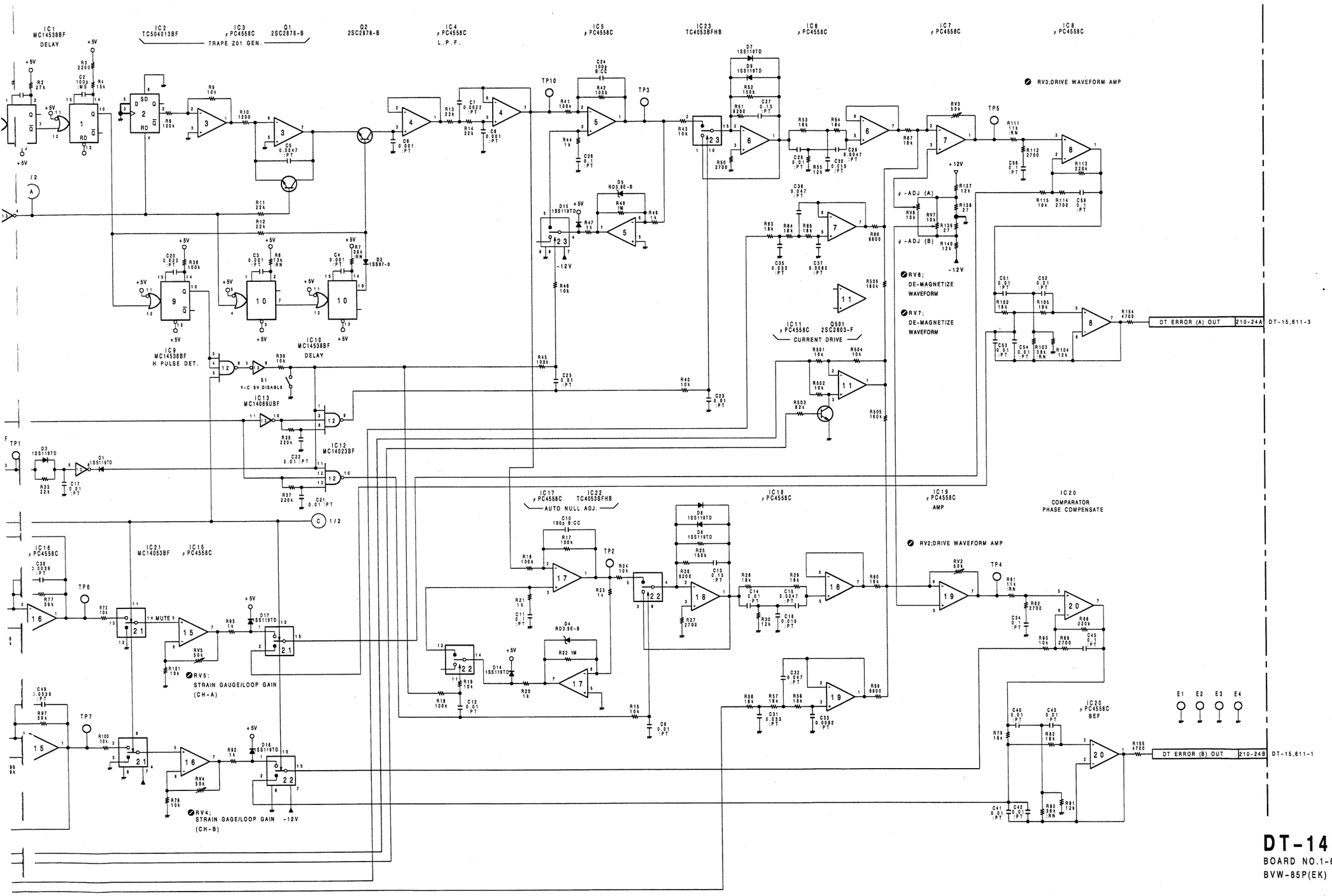

DT-14PC BOARD (2/2)

BOARD NO.1-622-581-11

BVW-85P(EK) ;#10001-

17-600

17-601

DT-14PC DUS-282

DT-14PC; DYNAMIC TRACKING
DUS-282; STRAIN GAUGE BUFFER

DT-14PC(1-622-581-11)
BVW-85P

D1	C-6	IC21	A-7	TP2	A-6
D2	C-1	IC22	B-7	TP3	B-3
D3	C-8	IC23	B-1	TP4	A-3
D4	A-6	IC43	D-8	TP5	B-5
D5	B-1	IC44	C-5	TP6	A-7
D6	A-5	IC45	C-6	TP7	A-8
D7	A-2	IC46	D-4	TP10	B-1
D8	A-5	IC47	D-5	TP11	C-6
D9	A-2	IC48	C-3	TP201	D-8
D14	B-6	IC50	C-4	TP202	D-7
D15	B-1	IC51	D-7	TP301	E-6
D16	B-7	IC101	E-8	TP302	E-5
D17	A-7	IC102	E-8	TP303	E-4
D301	E-3	IC103	E-7	TP304	E-4
D304	C-6	IC104	E-4	TP305	D-3
		IC105	E-3	TP306	D-3
E1	E-8	IC106	D-6	TP307	D-4
E2	E-2			TP308	D-5
E3	A-1	Q1	D-1		
E4	A-8	Q2	C-1		
IC1	C-3	Q301	E-6		
IC2	C-2	Q302	E-5		
IC3	D-1	Q303	E-5		
IC4	C-1	Q304	E-3		
IC5	B-2	Q305	D-4		
IC6	A-2	Q501	B-4		
IC7	B-4				
IC8	B-5	RV2	A-4		
IC9	D-2	RV3	B-5		
IC10	E-1	RV4	B-2		
IC11	B-3	RV5	A-8		
IC12	B-6	RV6	A-1		
IC13	C-7	RV7	A-1		
IC14	C-8	RV203	C-5		
IC15	A-8	RV304	D-3		
IC16	B-8	RV305	D-5		
IC17	A-6				
IC18	A-5	S1	A-1		
IC19	A-4				
IC20	A-3	TP1	C-8		

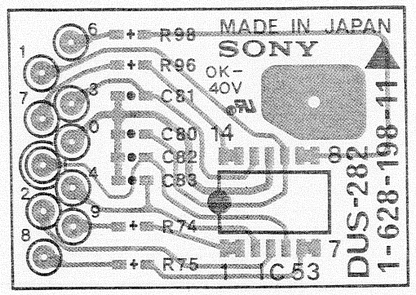

DUS-282 1-628-198-11 COMPONENT SIDE

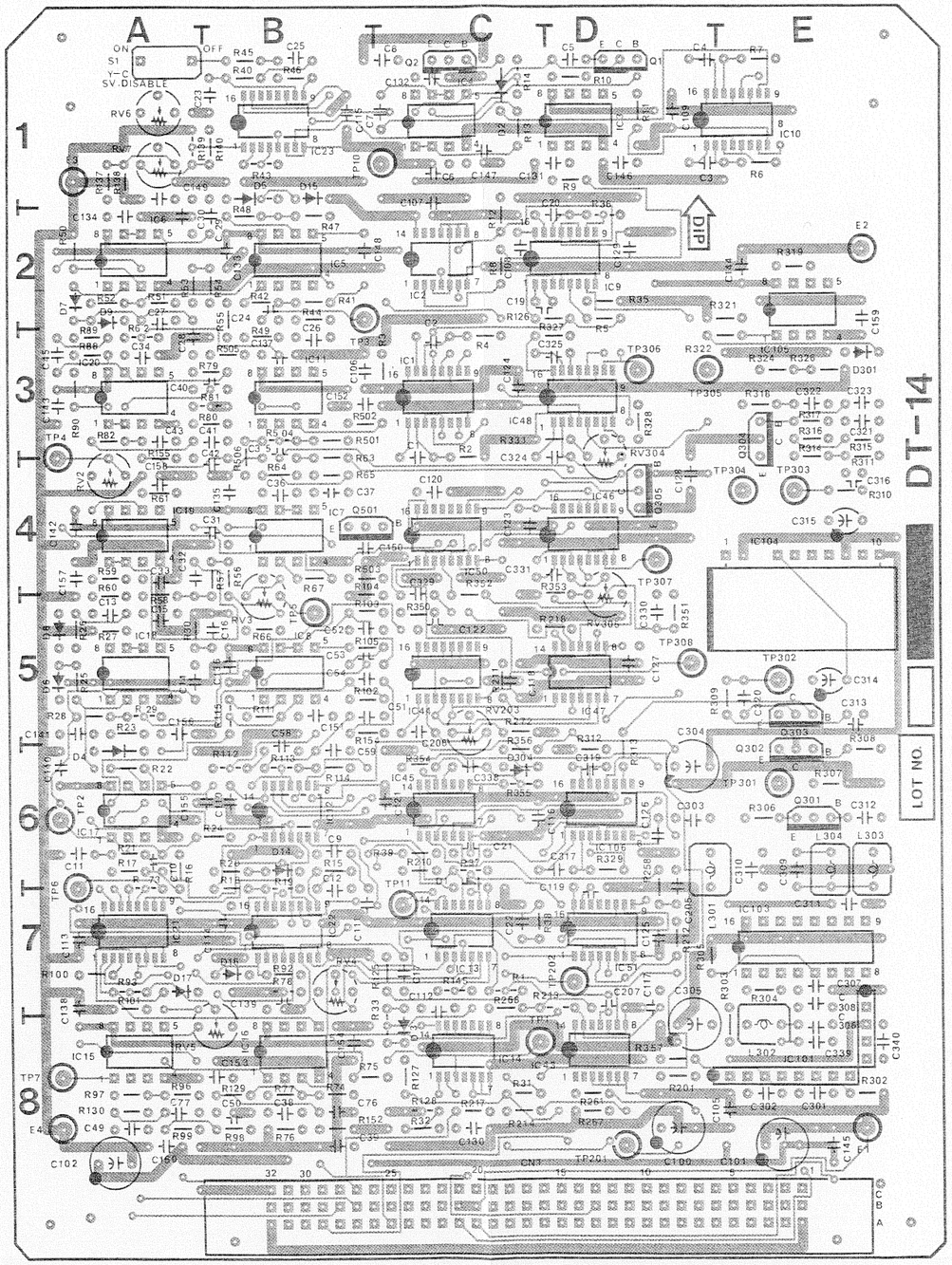

DT-14PC 1-622-581-11 COMPONENT SIDE

DT-14PC; DYNAMIC TRACKING
DUS-282; STRAIN GAUGE BUFFER

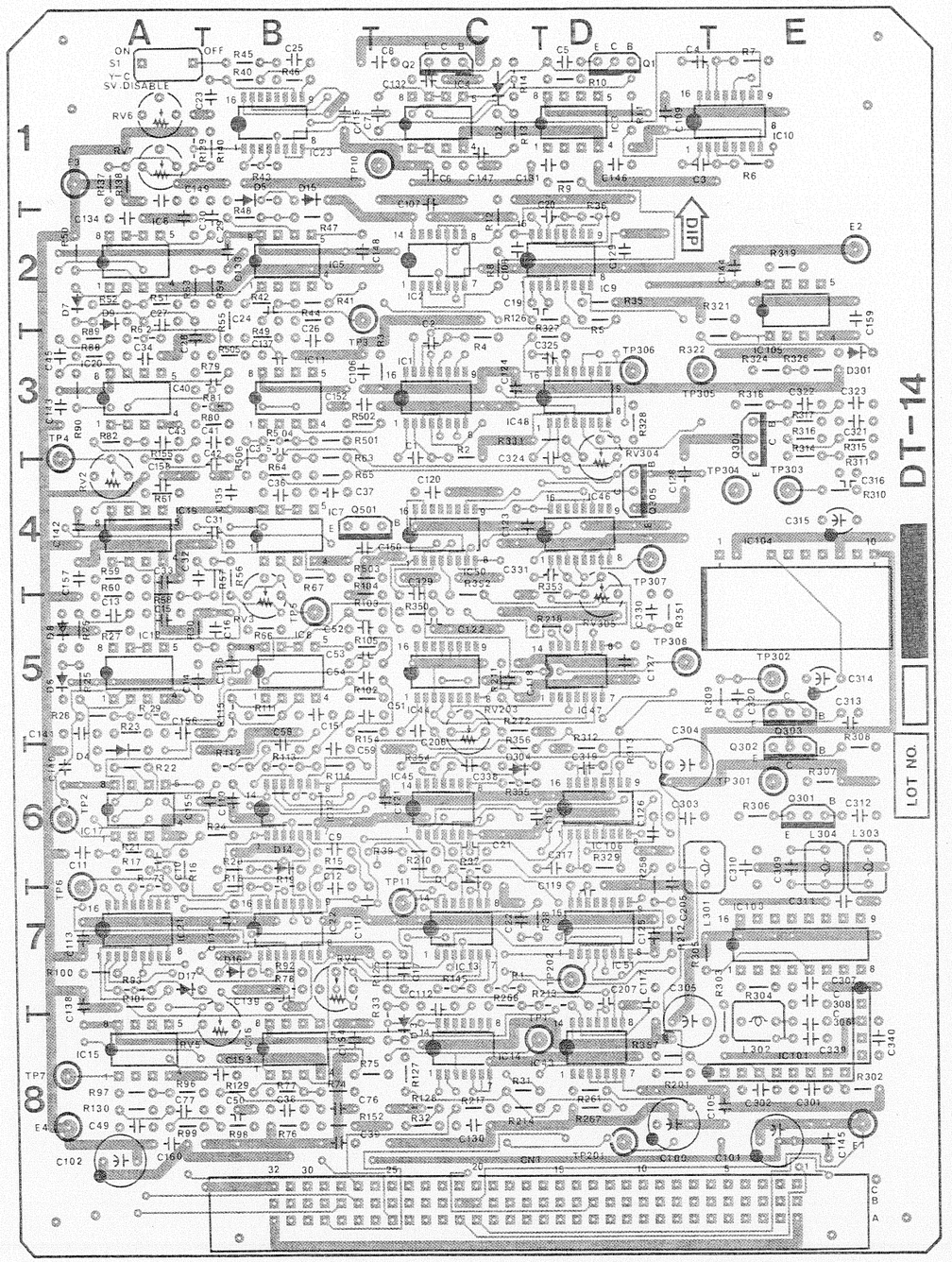

DT-14PC 1-622-581-11 COMPONENT SIDE

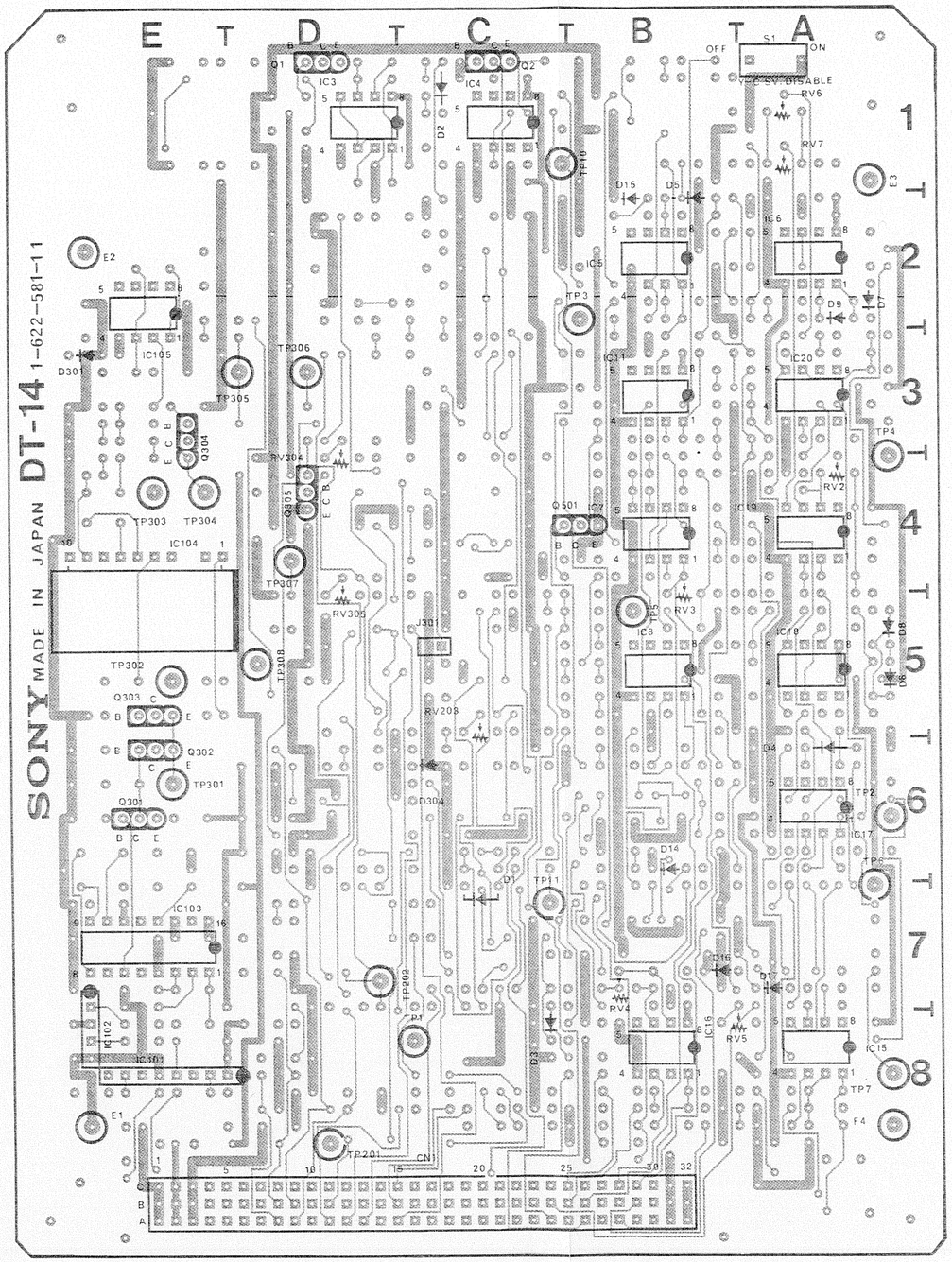

DT-14PC 1-622-581-11 SOLDER SIDE

DT-15; DYNAMIC TRACKING

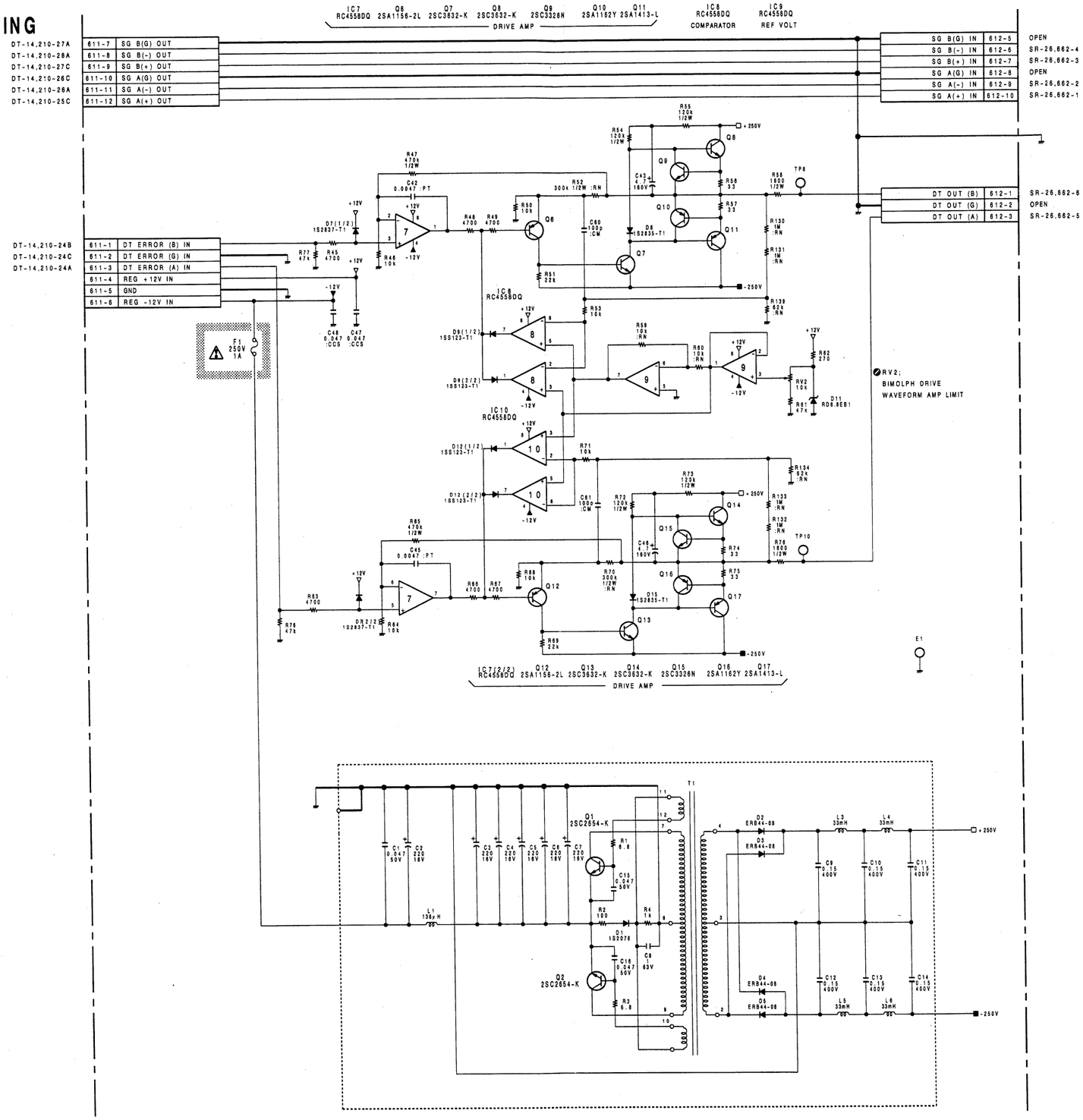

NOTE:

The shaded and ⚠ -marked components are critical to safety. Replace only with same components as specified.

DT-15 BOARD

BOARD NO.1-622-558-14

BVW-85P(EK) ;#10001-

17-611

17-612

A B C D E F G H

1 2 3 4 5

DT-15; DYNAMIC TRACKING

DT-15(1-622-558-14)
BVW-85P

CN611	D-1
CN612	D-2
D1	A-1
D2	A-2
D3	A-2
D4	B-2
D5	A-2
*D7	D-1
*D8	C-1
*D9	C-1
D11	A-2
*D12	D-2
*D15	C-2
E1	A-1
F1	B-1
IC7	D-1
IC8	D-1
IC9	D-2
IC10	D-1
Q1	A-1
Q2	A-1
Q6	D-1
Q7	D-1
Q8	C-1
*Q9	C-1
*Q10	C-1
Q11	C-1
Q12	D-2
Q13	D-2
Q14	C-2
*Q15	G-2
*Q16	C-2
Q17	C-2
RV2	A-2
TP8	A-1
TP10	A-1

*: SOLDERING SIDE

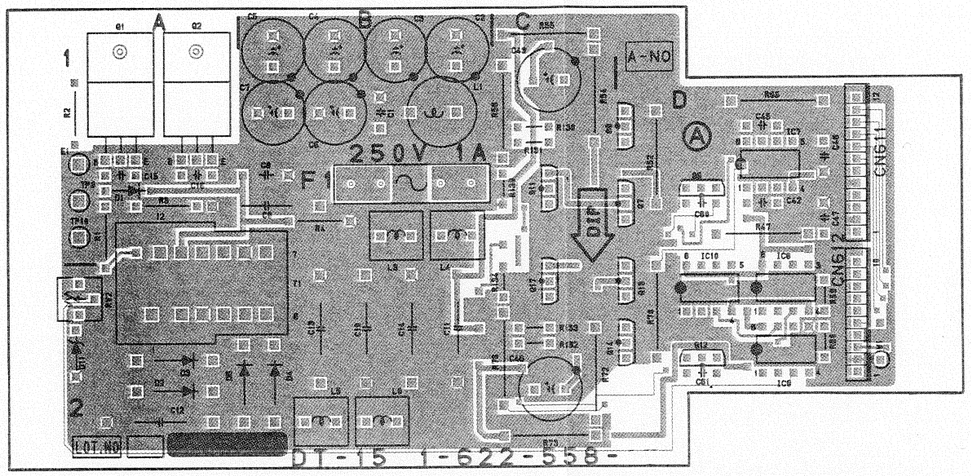

DT-15 1-622-558-14 A SIDE

A Side is the same as Component Side.

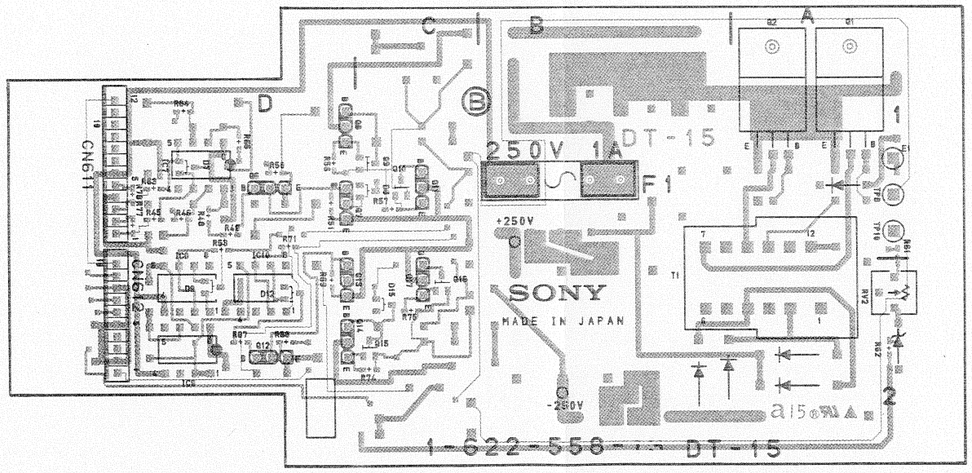

DT-15 1-622-558-14 B SIDE

B Side is the same as Solder Side.

SY-151(1/3); SYSTEM CONTROL. CPU-1

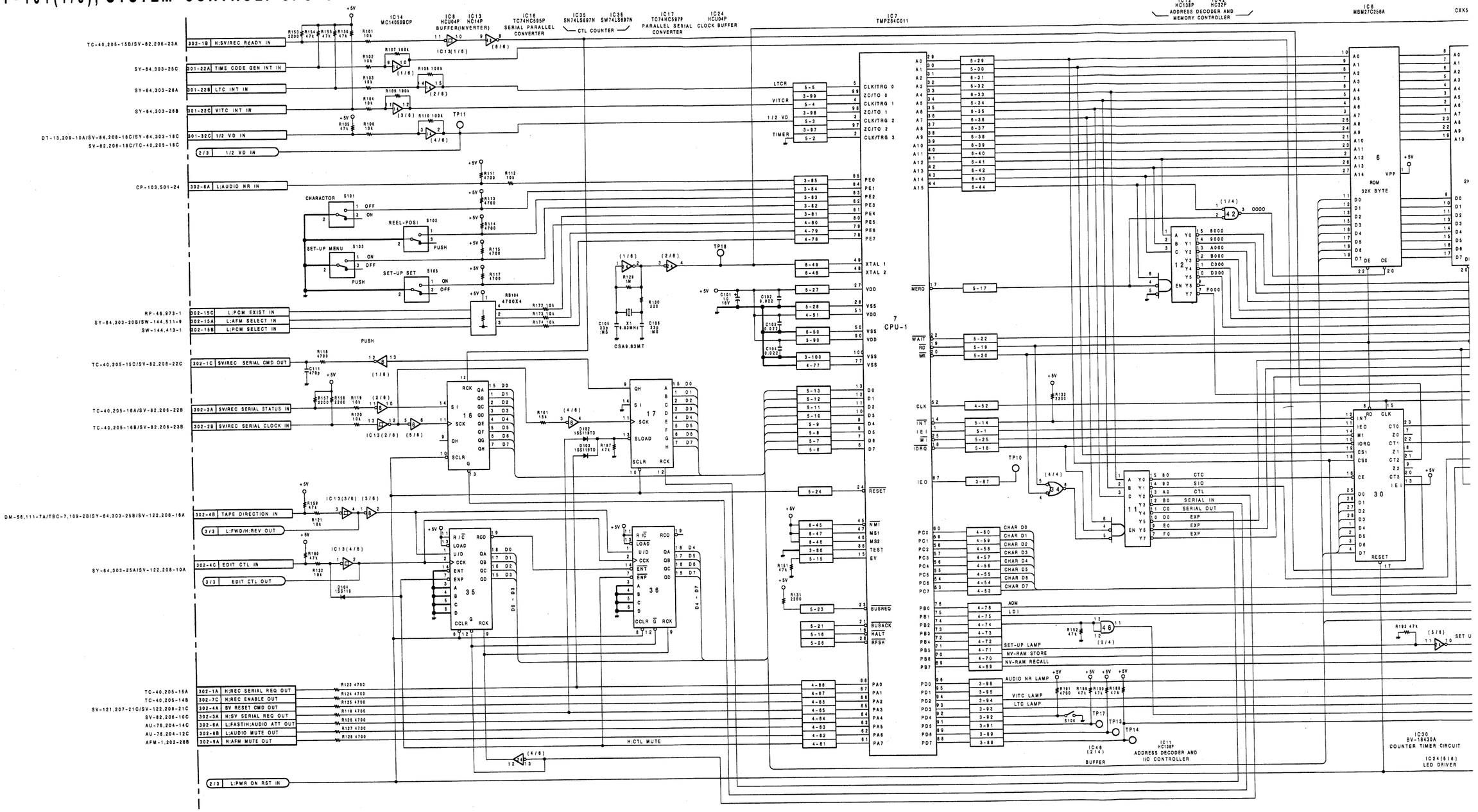

17-619 17-620

A B C D E F G H

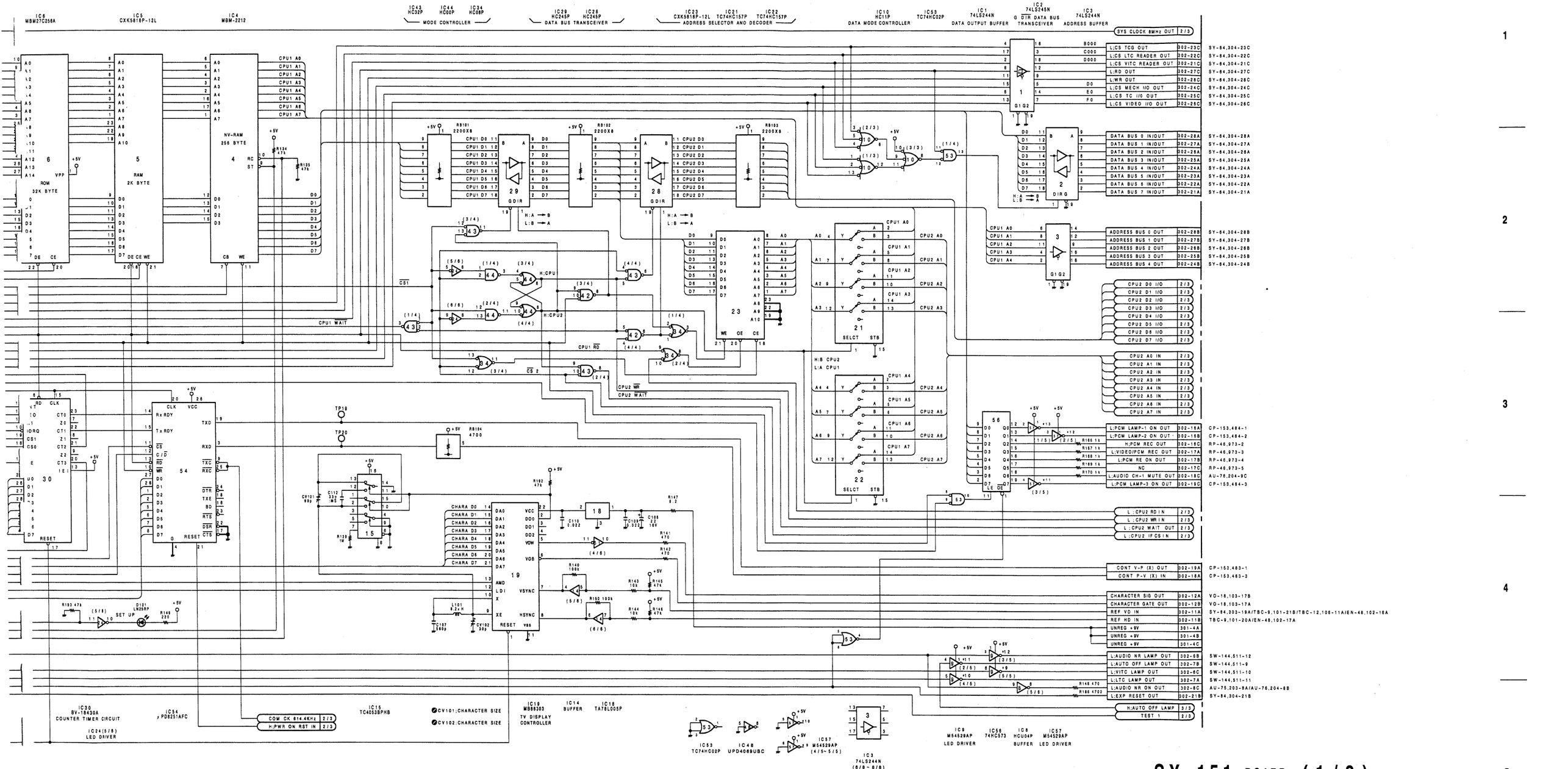

SY-151 BOARD (1/3)

BOARD NO.1-635-398-11

BVW-85P(EK) ;#10001-

SY-151(2/3); SYSTEM CONTROL. CPU-2 SERIAL INTERFACE

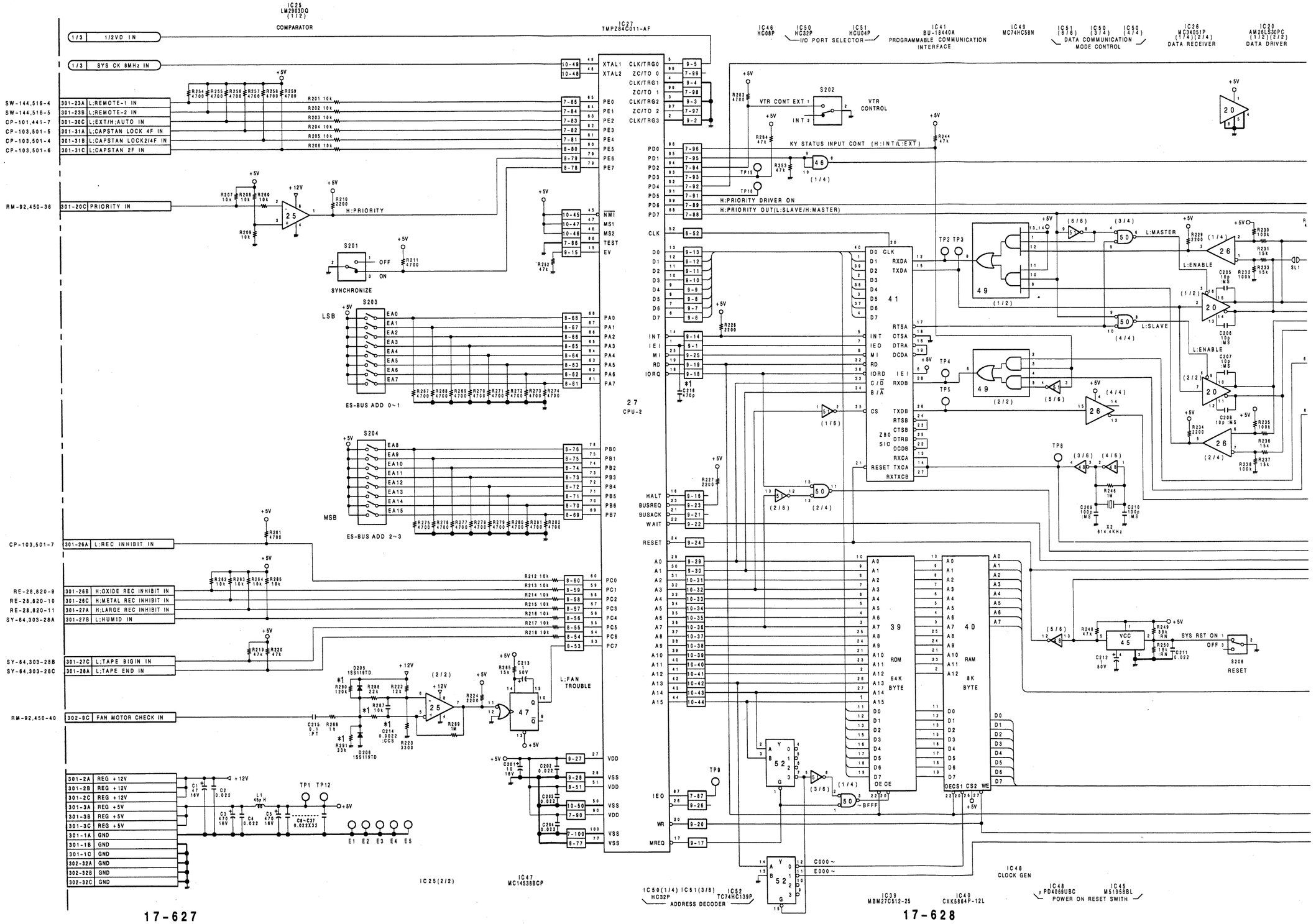

A B C D E F G H

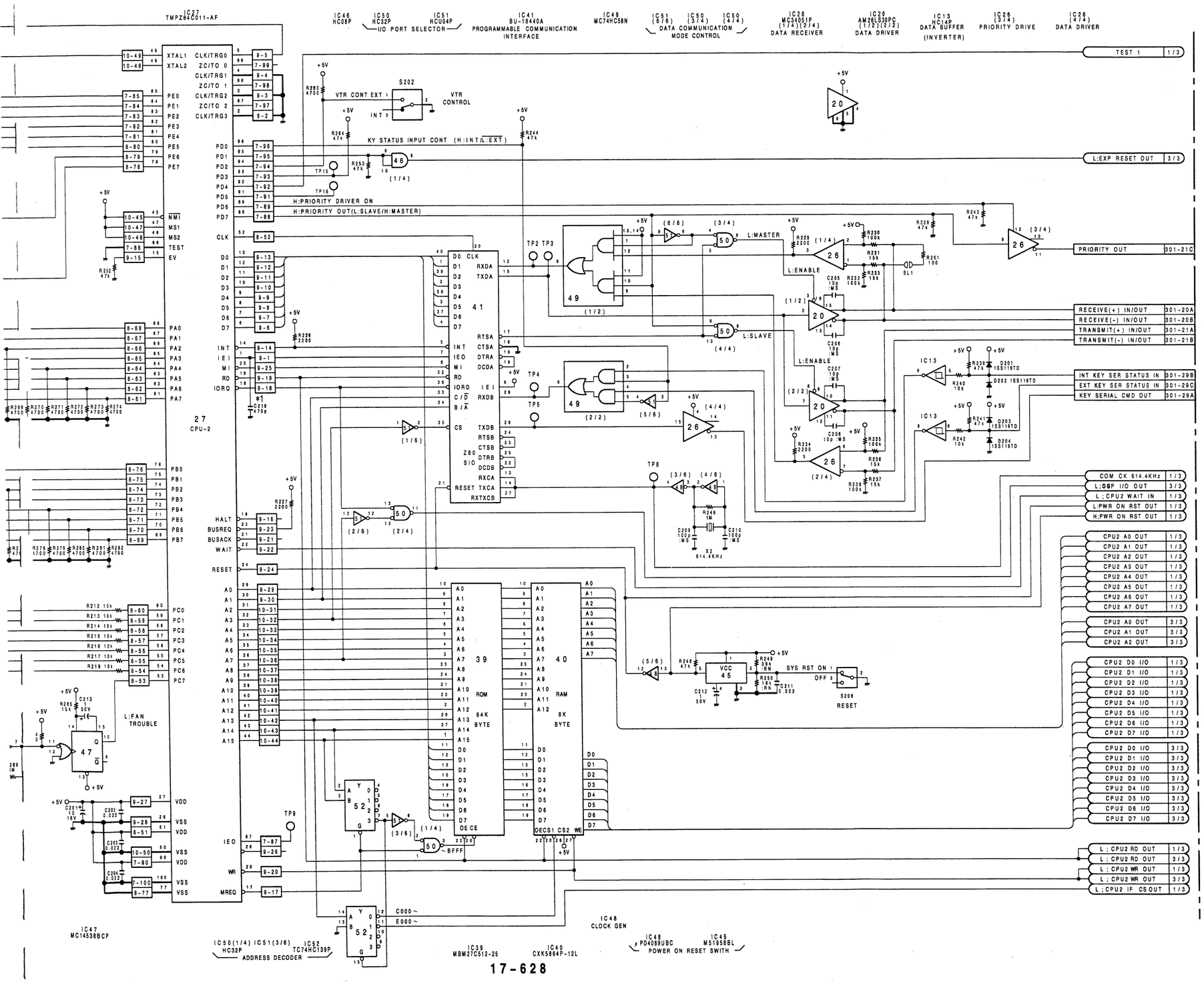

NOTE:

ADDRESS	MARK	CHANGE INFORMATION	SERIAL NO.
E3		C216:470P ADDED	
D5	*1	R287:10K DELETED AND SHORTED C214:0.0022 DELETED R290:120K ADDED R291:33K ADDED	#10034-

SY-151 BOARD (2/3)

BOARD NO.1-635-398-11

BVW-85P(EK);#10001-

SY-151(3/3); SYSTEM CONTROL, PARALLEL INTERFACE
RM-92; REMOTE CONNECTOR

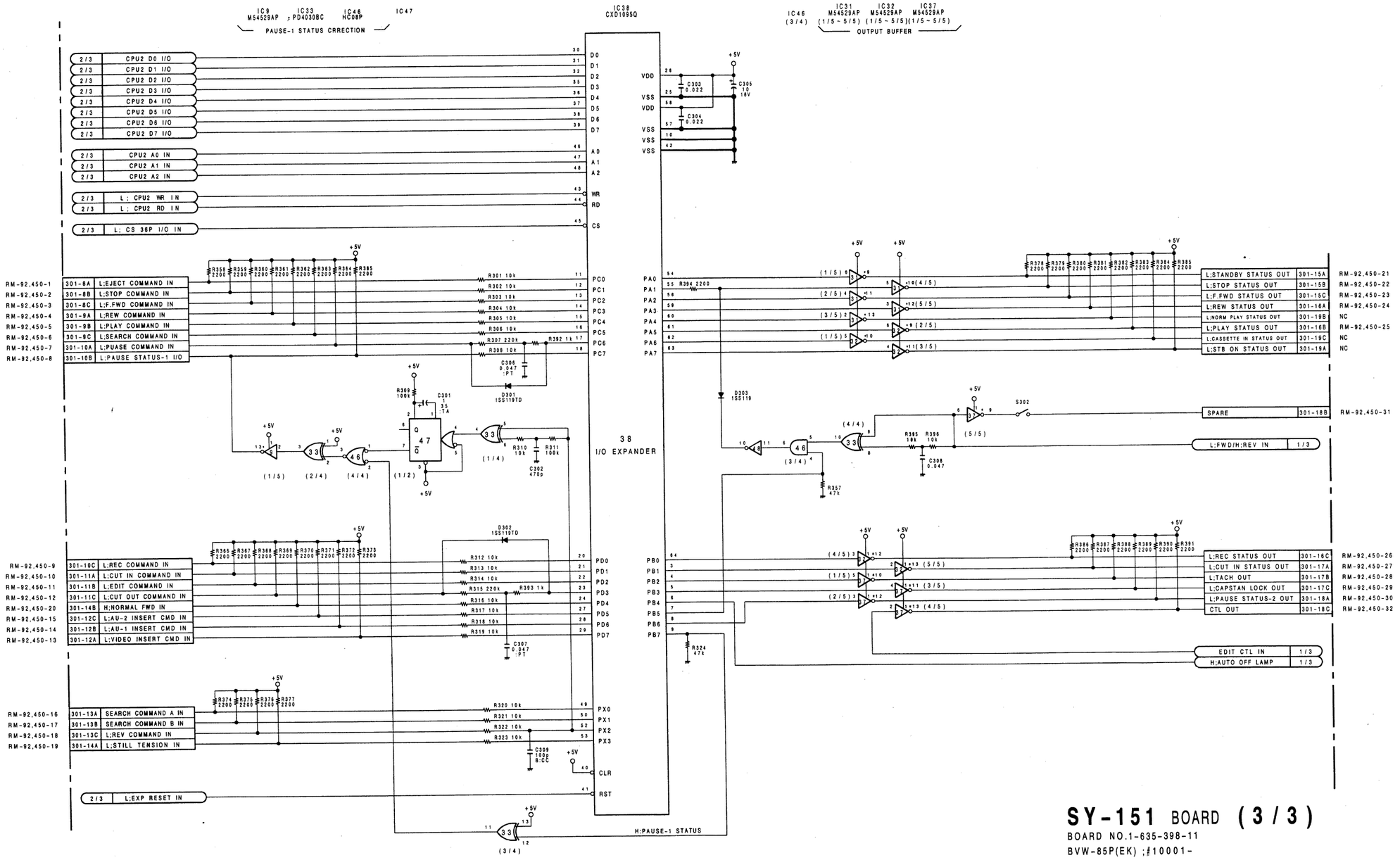

SY-151 BOARD (3/3)

BOARD NO.1-635-398-11
BVW-85P(EK) ;#10001-

17-633 17-634

A B C D E F G H

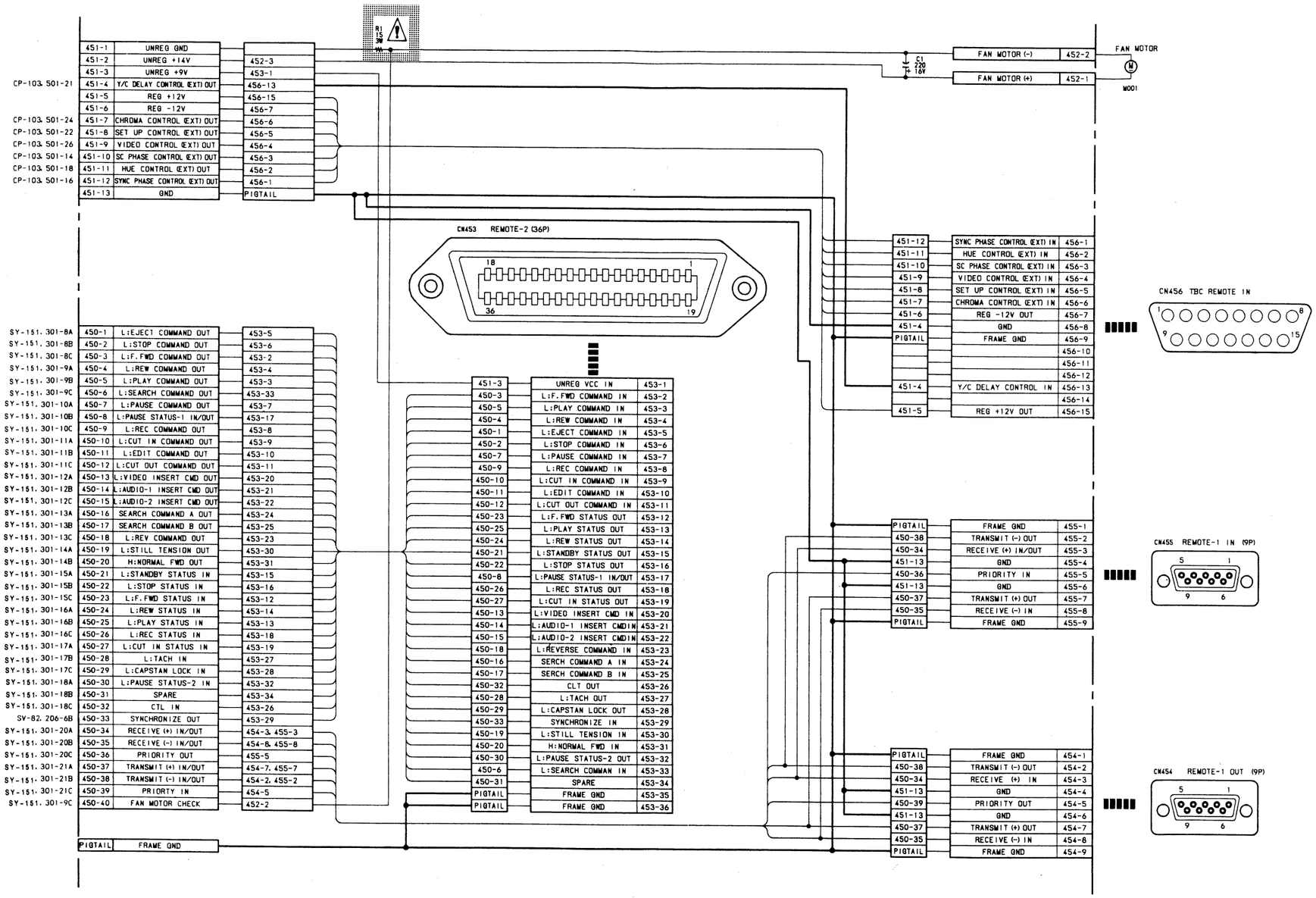

NOTE:

The shaded and ⚠ -marked components are critical to safety.
Replace only with same components as specified.

RM-92 BOARD

BOARD NO.1-635-563-11
BVW-85P(EK) ;#10001-

SY-151(1-635-398-11)

BVW-85P

CN16	B-8	IC33	F-3
CN139	F-6	IC34	F-9
CN301	G-1	IC35	E-10
CN302	B-1	IC36	F-11
		IC37	G-2
CV101	C-7	IC38	G-4
CV102	C-7	IC40	F-7
		IC41	F-8
C1	F-1	IC42	G-9
		IC43	G-10
D101	C-12	IC44	G-11
D102	D-6	IC45	F-12
D103	D-6	IC46	H-5
D104	C-1	IC47	H-6
D201	C-1	IC48	H-7
D202	C-1	IC49	H-8
D203	D-1	IC50	H-9
D204	D-1	IC51	H-10
D205	E-1	IC52	H-11
D206	E-1	IC53	C-3
D301	G-1	IC54	F-11
D302	H-4	IC56	A-2
D303	H-6	IC57	B-2
E1	A-1	S101	E-12
E2	A-12	S102	C-12
E3	D-8	S103	B-12
E4	H-1	S105	B-12
E5	H-12	S106	A-11
		S201	D-12
IC1	A-1	S202	F-12
IC2	A-3	S203	D-3
IC3	A-3	S204	E-3
IC4	A-4	S206	G-11
IC5	A-6	S302	H-6
IC7	B-11		
IC8	B-1	TP1	H-3
IC9	B-3	TP2	H-9
IC10	B-3	TP3	F-9
IC11	B-4	TP4	H-9
IC12	B-5	TP5	F-7
IC13	C-1	TP8	H-7
IC14	C-2	TP9	G-6
IC15	B-8	TP10	D-11
IC16	C-4	TP11	D-11
IC17	C-5	TP12	H-10
IC18	C-6	TP13	C-11
IC19	C-7	TP14	C-11
IC20	D-2	TP15	G-6
IC21	D-7	TP16	G-6
IC22	D-8	TP17	A-12
IC23	D-10	TP18	B-12
IC24	C-11	TP19	G-11
IC25	E-1	TP20	G-11
IC26	E-2		
IC27	E-5	X1	D-12
IC28	E-8	X2	H-8
IC29	E-9		
IC30	D-11		
IC31	F-1		
IC32	F-2		

SY-151; SYSTEM CONTROL

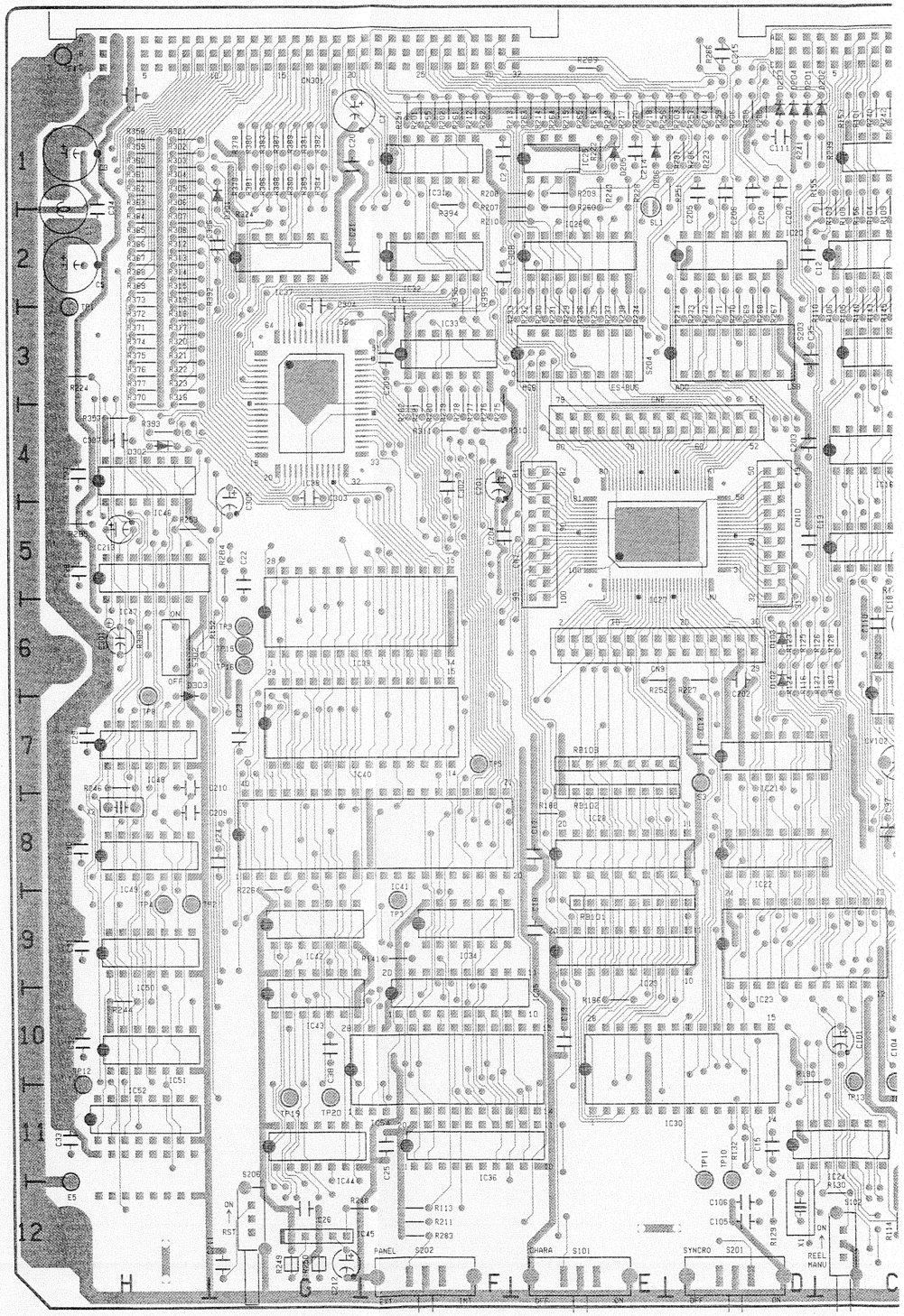

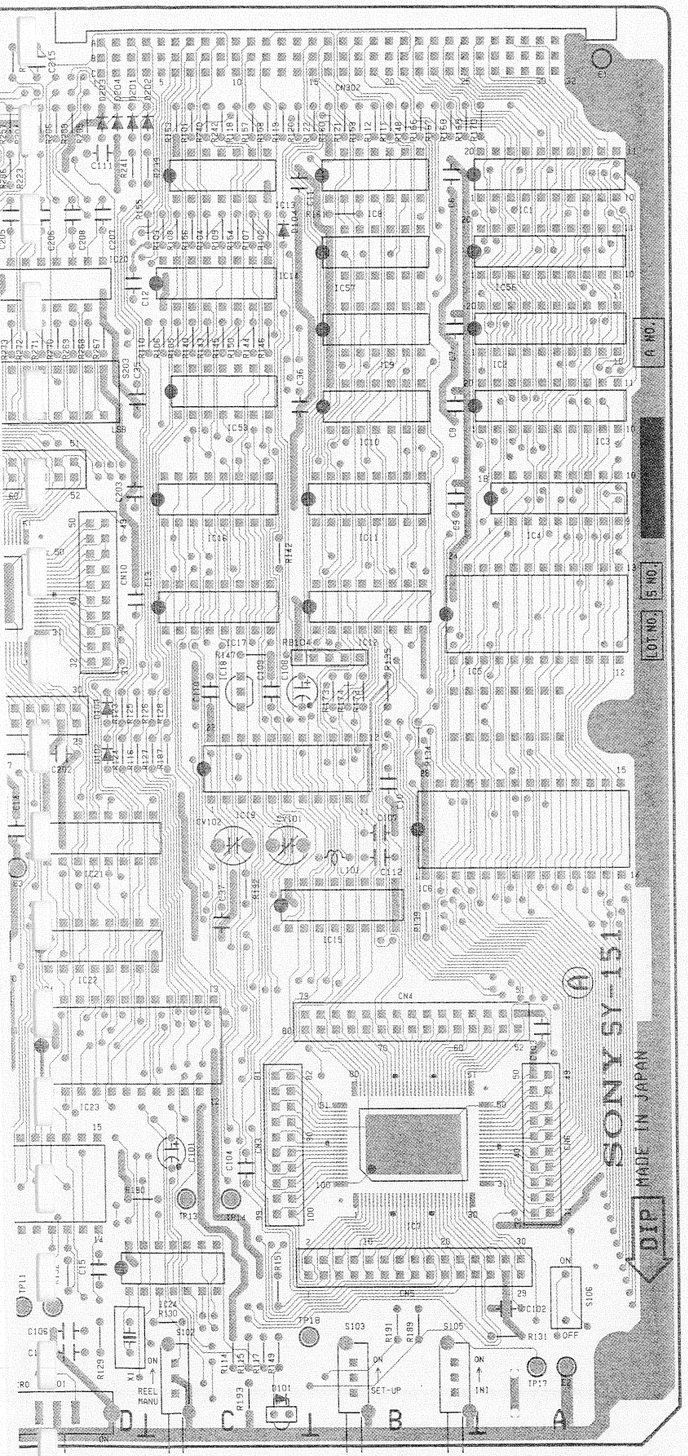

SY-151 1-635-398-11 A SIDE

A Side is the same as Component Side.

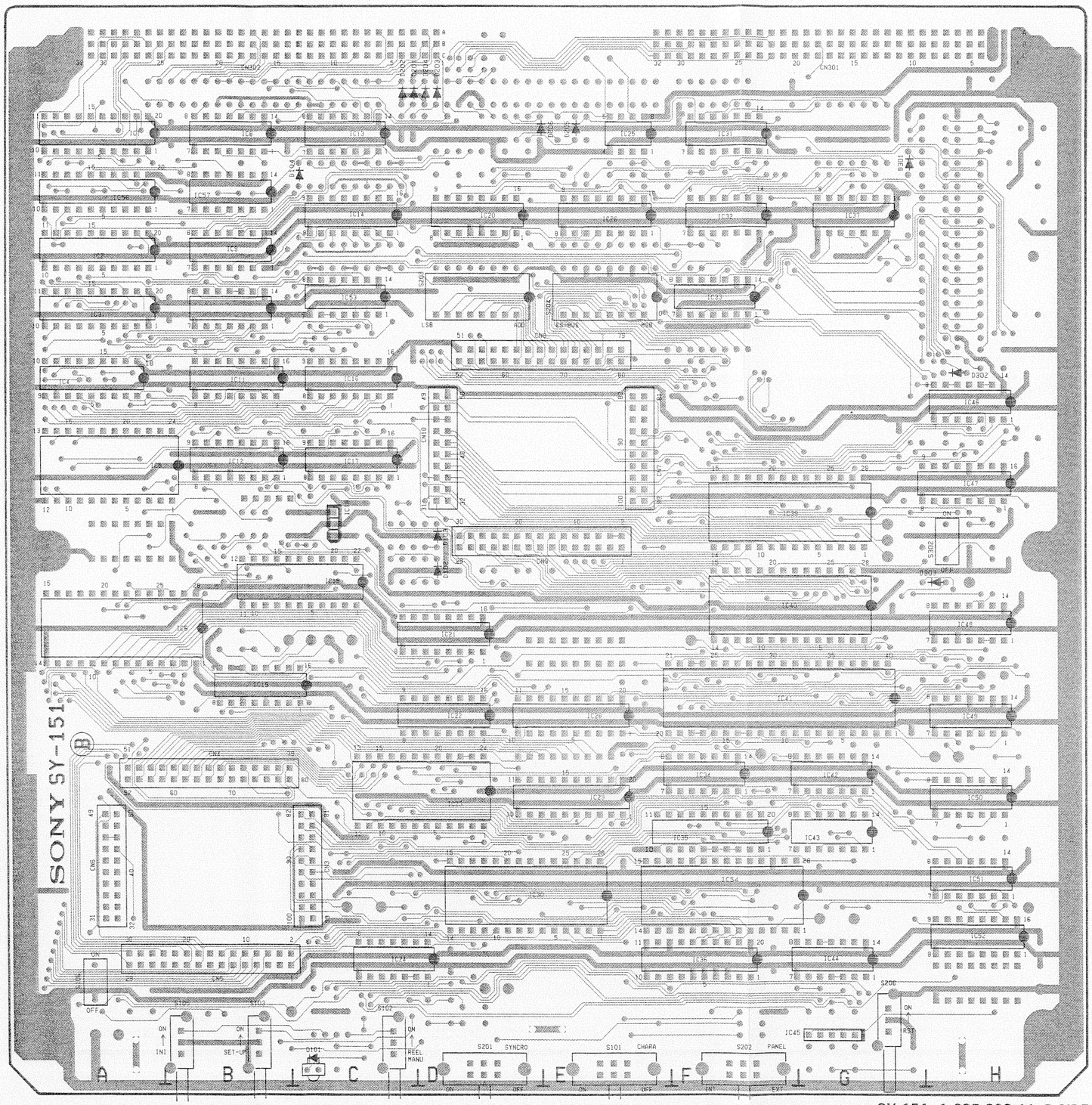

SY-151 1-635-398-11 B SIDE

B Side is the same as Solder Side.

RM-92; REMOTE CONNECTOR

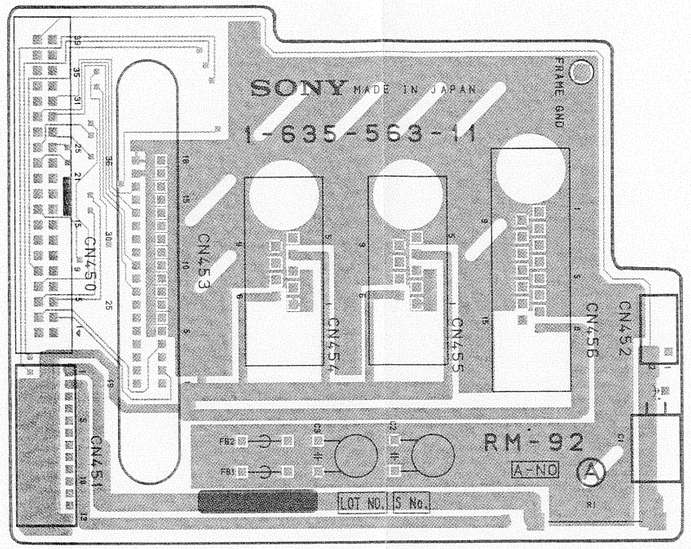

RM-92 1-635-563-11 A SIDE

A Side is the same as Component Side.

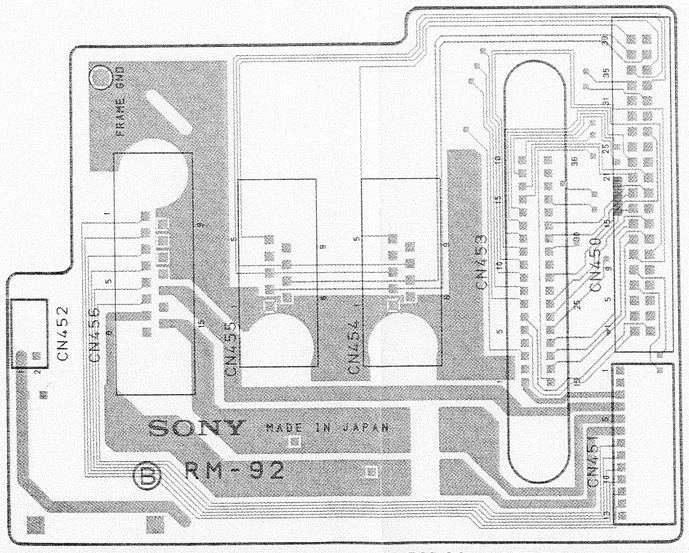

RM-92 1-635-563-11 B SIDE

B Side is the same as Solder Side.

SY-64P(1/6); I/O EXPANDER

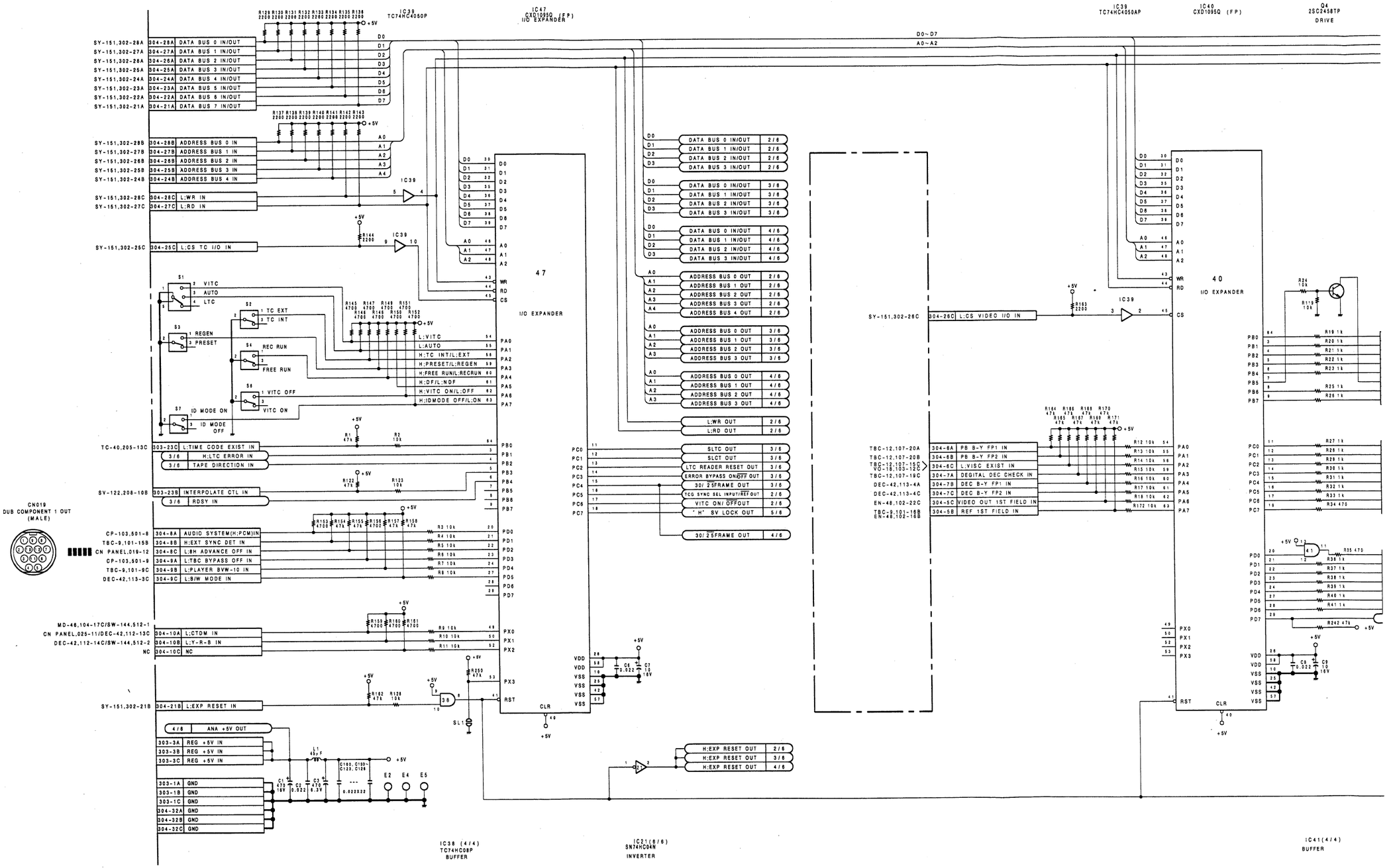

17-653 17-654

A B C D E F G H

SY-64P(1/6)

NOTE:

ADDRESS	MARK	CHANGE INFORMATION	SERIAL NO.
N5	*1	C4:220μF/35V TO 100μF/16V	#10054-
M5	*2	IC TYPE CHANGE IC30,31; TA7267P TO TA7267BP	#10109-

Q4
2SC2458TP
DRIVE

D0~D7
A0~A2

IC46
CXD1095Q (T-P)
I/O EXPANDER

IC38 (1/4,2/4)
TC74HC4050AP
EMERGENCY PINCH OFF

IC52
TC74HC4050AP

IC37
M54532P

IC45
M54523P
DRIVER

46
I/O EXPANDER

37

45

UNREG GND

PB0	SV 1 OUT	303-29A	TBC-9,101-8A
PB1	SV 2 OUT	303-29B	TBC-9,101-8B
	L:REC OUT	303-29C	TBC-9,101-8C
	H:ADVANCE OFF OUT	303-30A	TBC-9,101-9A
PB5	L:TBC CONFI MODE OUT	303-30B	TBC-9,101-9B/TBC-12,107-22C DM-56,111-5B
PB6	L:8H ADVANCE OFF OUT	303-30C	CN PANEL,CN025-12
PB7	H:TBC BYPASS ON OUT	303-31A	VO-18,103-15C
	H:COMB FILTER OFF OUT	303-31B	TBC-8,107-21A
PC0	H:SERVO REF HOLD OUT	303-31C	TBC-9,101-10A
PC1	L:H-SHIFT INH OUT	303-32A	TBC-12,107-23C/VO-18,102-20C EN-48,103-28C
PC2	L:CH-1 PCM SEL OUT	303-32B	CP-153,475-2
	L:CH-2 PCM SEL OUT	303-32C	CP-153,475-1
PC5	H:F.FWD MODE OUT	304-1A	DM-56,111-11B/TBC-7,108-14A
PC6	H:REW MODE OUT	304-1B	DM-56,111-10B/TBC-7,108-14C
PC7	H:CHROMA MUTE OUT	304-1C	EN-48,111-27A DM-56,102-28B
	L:METAL/H:OXIDE OUT	304-2A	APM-1,202-27C/RP-48,931-3 AU-75,203-28A/RP-48,911-3 AU-76,204-28B DM-56,111-11C MD-46,104-15C DEC-20,103-5C SY-122,208-22C TC-40,205-14A BF-28,540-4 TBC-7,109-20C
PD1	L:DT HEADH/RP HEAD OUT	304-2B	DM-56,111-6C RE-89,832-8 EN-48,102-17C/DM-56,111-9A
PD2	H:NORM FWD OUT	304-2C	TBC-12,108-5
	L:NOISELESS PB OUT	304-3A	TBC-7,109-20B/TBC-12,107-21C
	L:AUDIO CH-2 SEL OUT	304-3B	CP-153,CN475-3
	B-Y ID OUT	304-3C	DEC-42,113-5C
	L:NON STD/H:STD OUT	304-4A	DEC-42,113-5B
	H:IN PHASE OUT	304-4B	TBC-12,107-20C
PD7	L:DT V MIX ON	4/8	

SY-151,302-24C	304-24C	L:CS MECH I/O IN	
CL-14,331-7	304-11A	H:CASSETE DOWN 1 IN	
CL-14,331-8	304-11B	H:CASSETE DOWN 2 IN	
CL-14,331-2	304-11C	H:CASSETTE IN 1 IN	
CL-14,331-3	304-12C	H:CASSETTE IN 2 IN	
CL-14,331-1	304-12A	L:LARGE/H:SMALL IN	
CL-14,331-6	304-12B	L:COMPATMENT EXIST IN	
SV-82,206-21A/PTC-15,871-3	304-14A	THREAD END IN	
SV-82,206-26C/PTC-15,871-1	304-14B	THREAD/UNTHREAD END IN	
RE-28,820-5	304-13A	H:L-POSITION IN	
RE-28,820-4	304-13B	H:S-POSITION IN	
SV-82,206-17B	303-23A	L:EMERGENCY IN	
RE-28,820-7	304-13C	L:METAL/H:OXIDE IN	
RE-28,820-6	304-20B	L:LARGE HUB IN	
RE-28,820-8	304-20C	L:THICKNESS TAPE IN	
SW-144,511-4/SY-151,302-15A	303-20B	L:AFM SEL IN	
CP-161,414-4	304-20A	L:AFM SELECT OUT	
SW-144,511-8/CP-103,501-25 CP-161,415-1	304-22B	H:AUTO STEREO IN	
HC-11,461-2	303-20C	H.M. CONTROL T1 OUT	
HC-11,461-3	303-21A	H.M. CONTROL T2 OUT	
HC-11,461-5	303-21B	H.M. CONTROL T3 OUT	
HC-11,461-6	303-21C	H.M. CONTROL CT OUT	

PC0	CC DOWN		
PB4	CC UP		
PB5	REEL SMALL		
PB6	REEL LARGE		
PB7			

	PINCH SOL STARTER OUT	304-15A	PD-35,854-4
	PINCH SOL HOLDER OUT	304-15B	PD-35,854-5
	T-BRAKE SOL STARTER OUT	304-16C	RE-36,803-3
	T-BRAKE SOL HOLDER OUT	304-17C	RE-36,803-4
	S-BRAKE SOL STARTER OUT	304-18C	RE-36,803-2
	S-BRAKE SOL HOLDER OUT	304-19C	RE-36,803-1
	CLEANING SOL HOLDER OUT	304-15C	PD-35,854-6
	L:CASSETE LAMP ON OUT	304-14C	CL-14,331-9
	UP/DOWN MOTOR(-)OUT	304-18A	CL-14,331-11
	UP/DOWN MOTOR(-)OUT	304-18B	CL-14,331-11
	UP/DOWN MOTOR(+)OUT	304-19A	CL-14,331-12
	UP/DOWN MOTOR(+)OUT	304-19B	CL-14,331-12
	POSITION MOTOR (-) OUT	304-16A	RE-36,803-5
	POSITION MOTOR (-) OUT	304-16B	RE-36,803-5
	POSITION MOTOR (+) OUT	304-17A	RE-36,803-6
	POSITION MOTOR (+) OUT	304-17B	RE-36,803-6
	UNREG +14V IN	303-5A	
	UNREG +14V IN	303-5B	
	UNREG +14V IN	303-5C	
	UNREG GND	303-6A	
	UNREG GND	303-6B	
	UNREG GND	303-6C	
	UNREG GND OUT	6/8	

IC41(4/4)
BUFFER

IC45(6/7)

IC38 (3/4)
TC74HC08P
BUFFER

IC39
TC74HC4050P

*2
IC30
TA7267BP
MOTOR DRIVER

*2
IC31
TA7267BP
MOTOR DRIVER

IC37(4/4)

SY-64P BOARD (1/6)

BOARD NO.1-622-578-14
BVW-85P(EK) ;#10001-

17-655

17-656

1 2 3 4 5

I J K L M N O

SY-64P(2/6); LTC/VITC GENERATOR

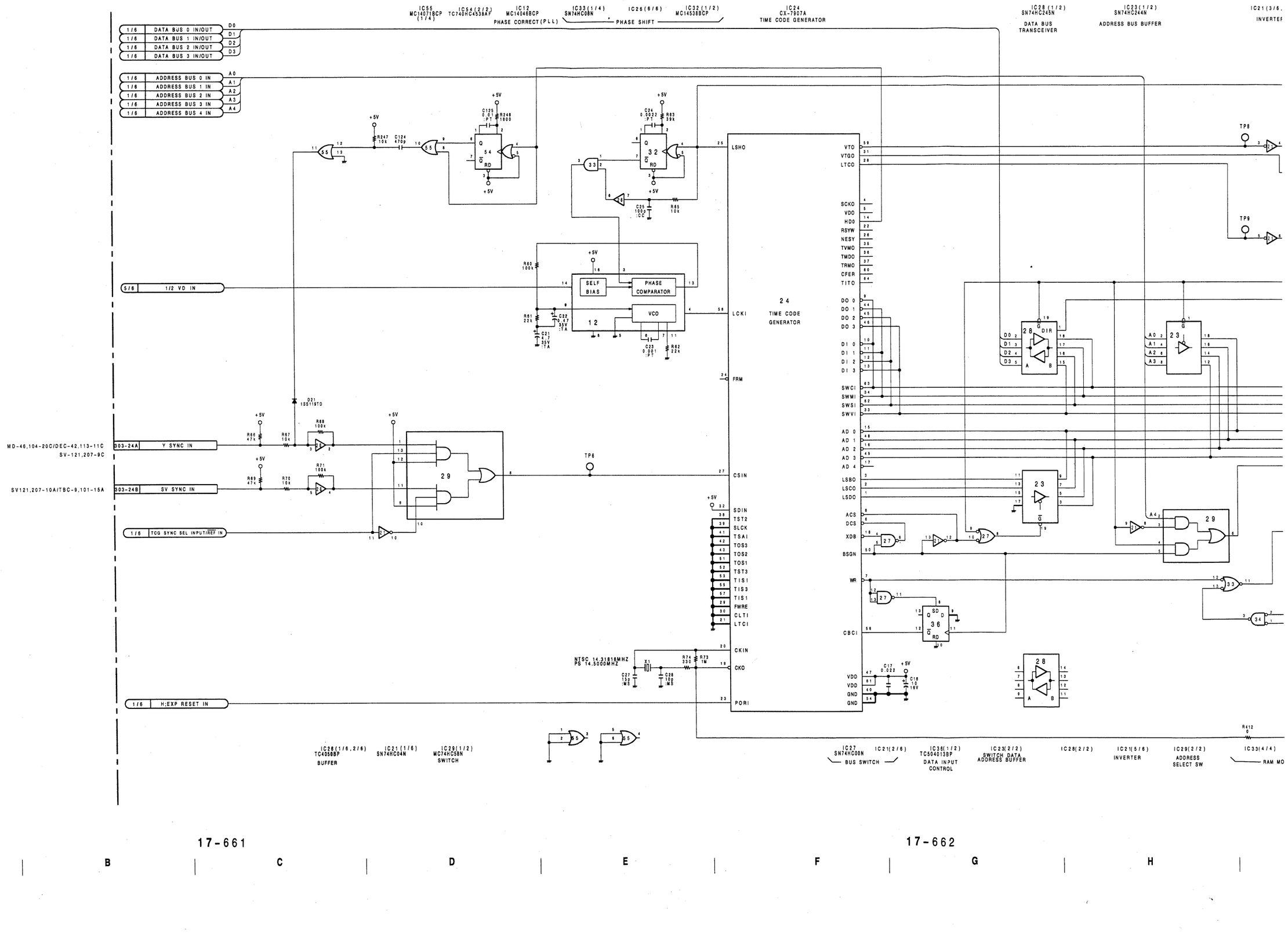

17-661 17-662

A B C D E F G H

SY-64P(2/6)

IC12 MC14046BCP PHASE CORRECT(PLL)
IC33(1/4) SN74HC08N
IC26(6/6)
IC32(1/2) MC14538BCP
PHASE SHIFT
IC24 CX-7907A TIME CODE GENERATOR
IC28(1/2) SN74HC245N DATA BUS TRANSCEIVER
IC23(1/2) SN74HC244N ADDRESS BUS BUFFER
IC21(3/6,4/6) INVERTER
IC33(2/4,3/4) VITC SWITCH

+5V
C24 0.0022 PT
R63 39k
R248 1800
C25 1000 PT CC
R65 10k
R60 100k
SELF BIAS
PHASE COMPARATOR
VCO
C21 2.7 35V ETA
C22 4.7 35V ETA
R81 22k
C23 0.001 PT
R82 22k
TP6
TP8
TP9
C30 0.0033
R205 2200
R75 4700
R76 470
R77 4700
R78 4700
R79 2200
TIME CODE GEN INT OUT 303-25C SY151,301-22A
VITC OUT 303-27A MD-46,104-22C
H:VITC GATE OUT 303-27B DEC-42,113-10A
H:VITC REC OUT 303-27C DEC-42,113-10C
H:VITC ON/L:OFF 1/6
LTC OUT 303-26C TC-40,205-13B
L:CS TCG IN 304-23C SY151,302-23C
L: RD IN 1/6
L: WR IN 1/6
R207 47k R208 47k R209 47k R210 47k
R412 0
CK-1 OUT 4/6

24 TIME CODE GENERATOR
LSHO, LCKI, FRM, CSIN, SDIN, TST2, SLCK, TSAI, TOS3, TOS2, TOS1, TST3, TIS1, TIS3, TIS1, FWRE, CLTI, LTCI, CKIN, CKO, PORI
VTO, VTGO, LTCO, SCKO, VDO, HDO, RSYW, NESY, TVMO, TMDO, TRMO, CFER, TITO
DO 0, DO 1, DO 2, DO 3, DI 0, DI 1, DI 2, DI 3
SWC1, SWM1, SWS1, SWV1
AD 0, AD 1, AD 2, AD 3, AD 4
LSBO, LSCO, LSDO
ACS, DCS, XDB, BSGN, WR, CBCI, VDD, VDD, GND, GND
NTSC 14.31818MHZ PS 14.500MHZ
X1
R74 330
R73 1M
C27 15P MS
C28 100P MS
C17 0.022
C18 1.0 16V

IC27 SN74HC00N BUS SWITCH
IC21(2/6)
IC38(1/2) TC504013BP DATA INPUT CONTROL
IC23(2/2) SWITCH DATA ADDRESS BUFFER
IC28(2/2)
IC21(5/6) INVERTER
IC29(2/2) ADDRESS SELECT SW
IC33(4/4) IC34(1/4) SN74HC32N RAM MODE CONTROL
IC22 CXK5816PN STATIC RAM

SY-64P BOARD (2/6)

BOARD NO.1-622-578-14
BVW-85P(EK) ;#10001-

17-662

17-663

E F G H I J K L

1 2 3 4 5

SY-64P(3/6); LTC READER

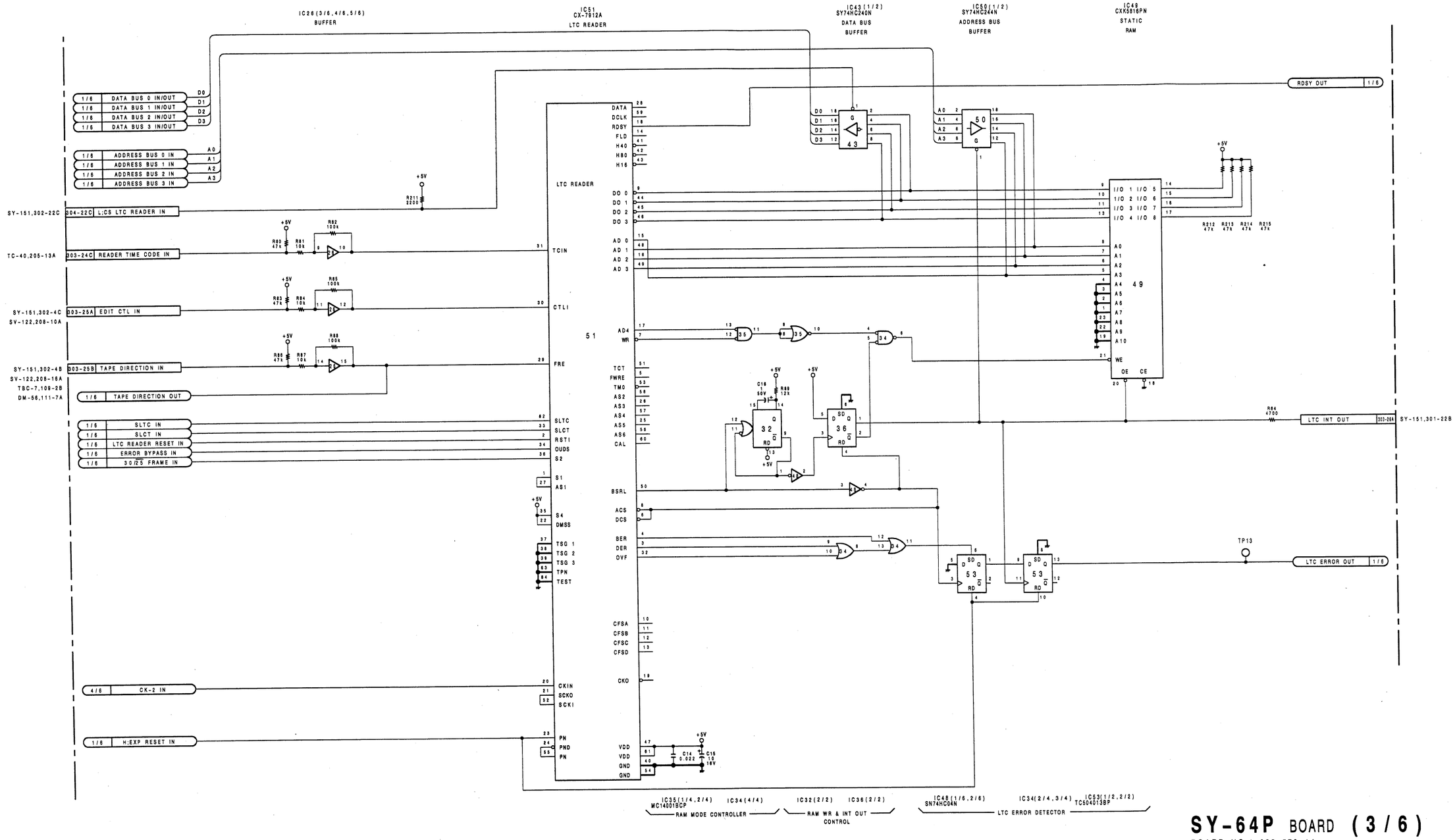

SY-64P BOARD (3/6)

BOARD NO.1-622-578-14
BVW-85P(EK) ;#10001-

17-667 17-668

A B C D E F G H

1 2 3 4 5

SY-64P(4/6); VITC READER

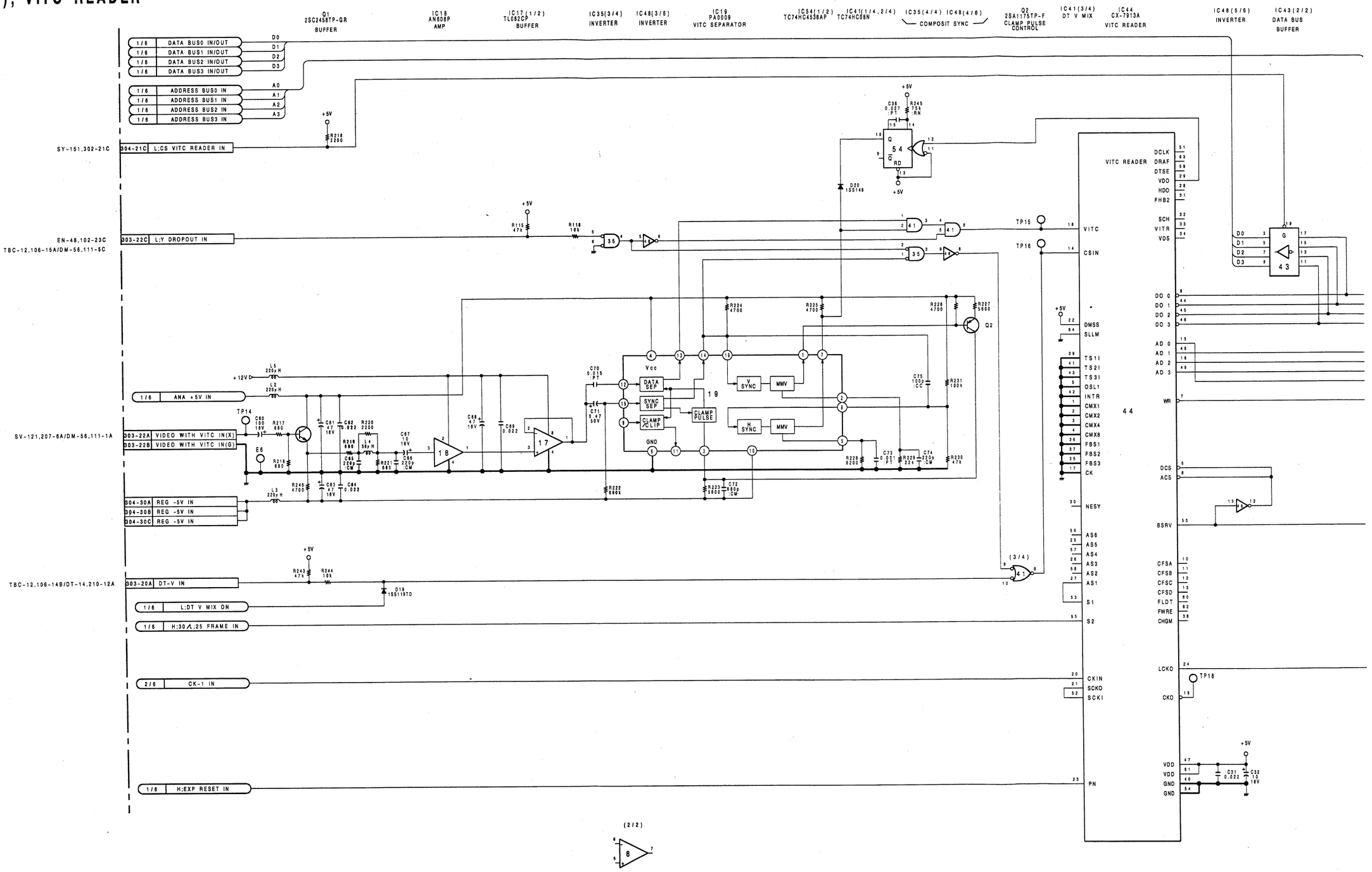

17-671 17-672

A B C D E F G H

SY-64P(4/6)

IC35(3/4) INVERTER
IC48(3/6) INVERTER
IC19 PA0009 VITC SEPARATOR
IC54(1/2) TC74HC4538AP
IC41(1/4,2/4) TC74HC08N
IC35(4/4) IC48(4/6) COMPOSIT SYNC
Q2 2SA1175TP-F CLAMP PULSE CONTROL
IC41(3/4) DT V MIX
IC44 CX-7913A VITC READER
IC48(5/6) INVERTER
IC43(2/2) DATA BUS BUFFER
IC50(2/2) ADDRESS BUS BUFFER
IC42 CXK5816PN-12L STATIC RAM

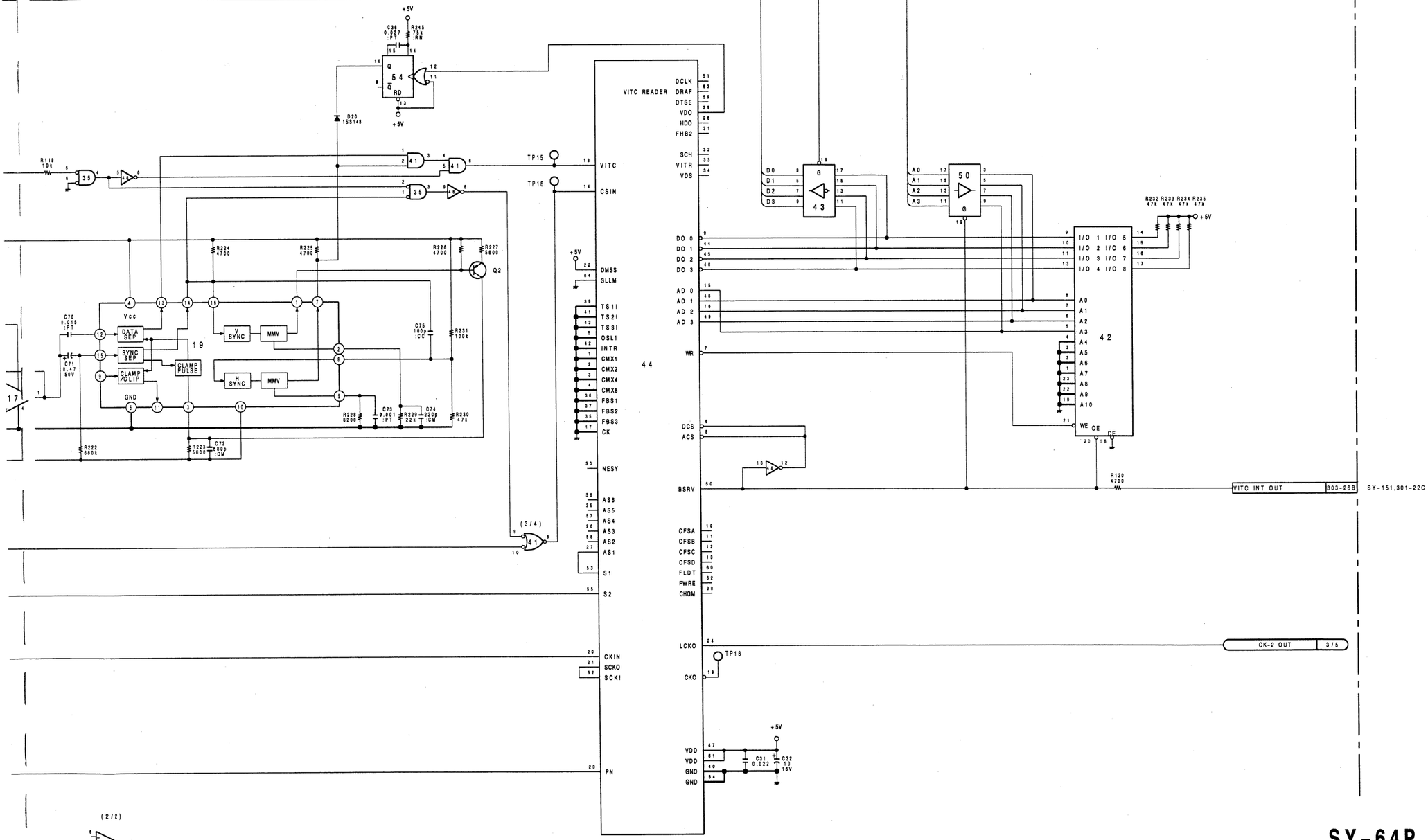

SY-64P BOARD (4/6)

BOARD NO.1-622-578-14
BVW-85P(EK) ;#10001-

17-672

17-673

SY-64P(5/6); TIME BASE IMPACT ERROR CORRECTOR
SY-64P(6/6); SENSOR AMPLIFIER

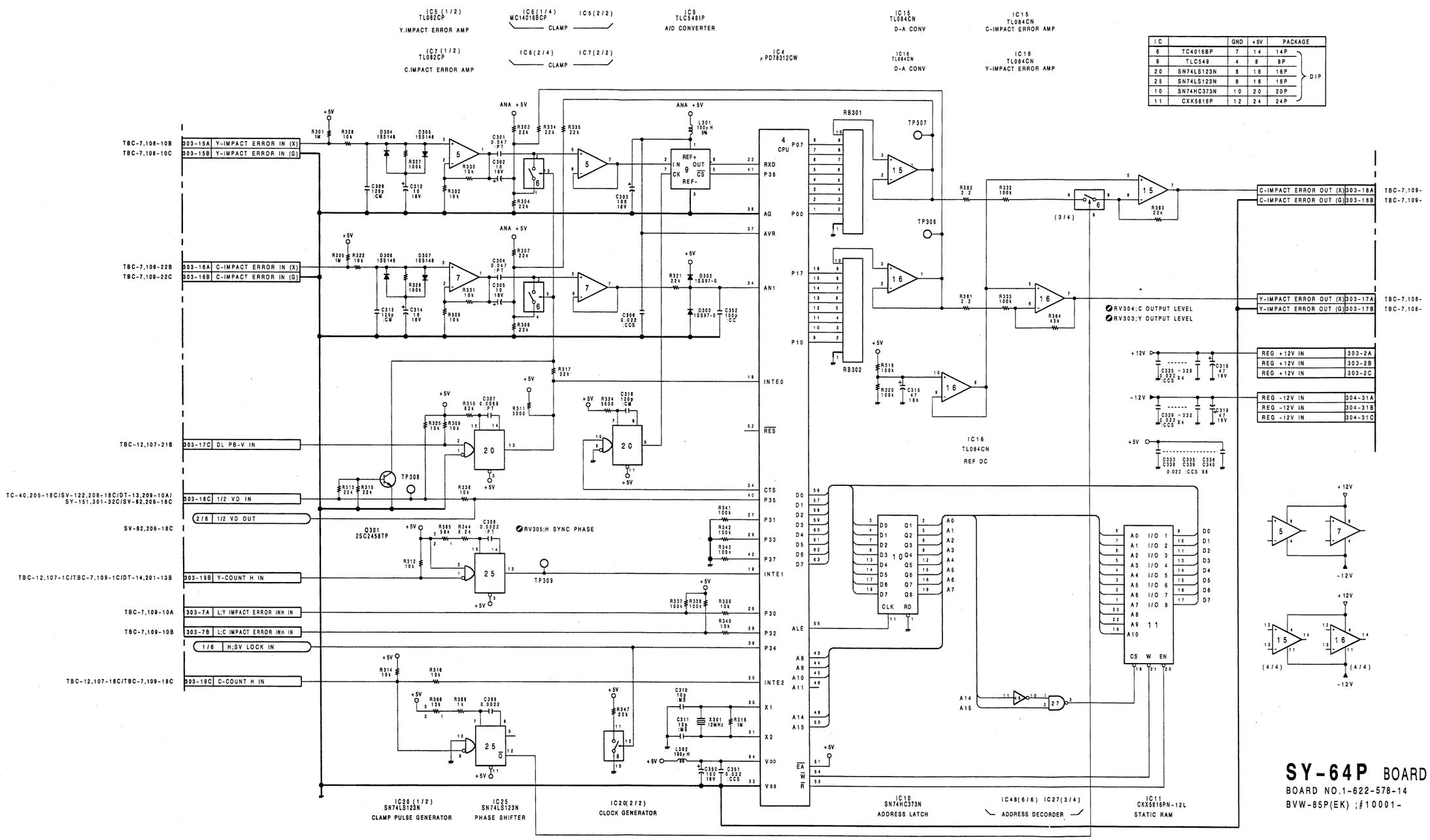

IC		GND	+5V	PACKAGE
6	TC4016BP	7	14	14P
9	TLC549	4	8	8P
20	SN74LS123N	8	16	16P
25	SN74LS123N	8	16	16P
10	SN74HC373N	10	20	20P
11	CXK5816P	12	24	24P

DIP

SY-64P BOARD
BOARD NO.1-622-578-14
BVW-85P(EK) ;#10001-

17-677

17-678

A B C D E F G H

SY-64P(5/6),(6/6)

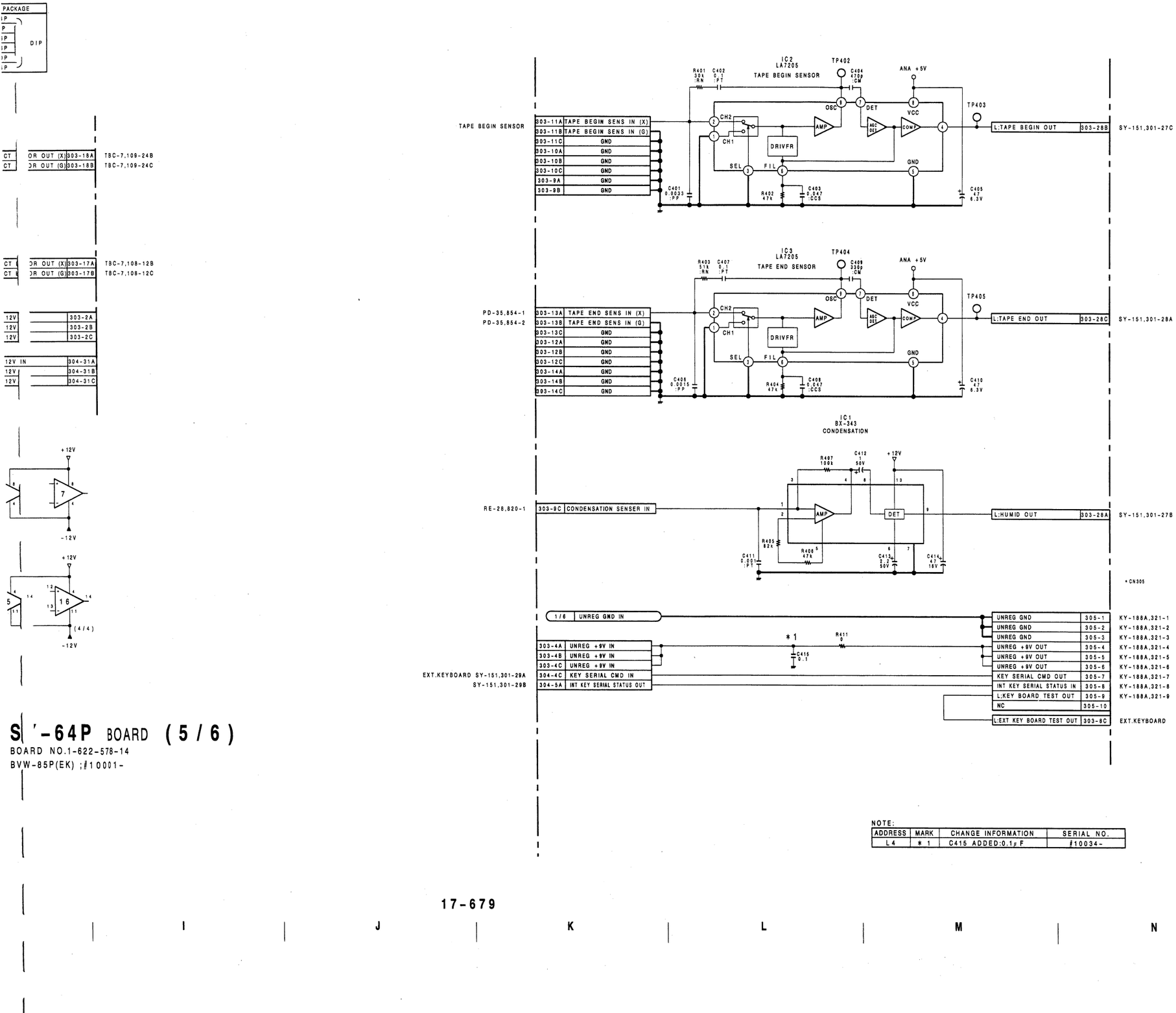

NOTE:

ADDRESS	MARK	CHANGE INFORMATION	SERIAL NO.
L4	* 1	C415 ADDED:0.1μF	#10034-

SY-64P BOARD (5/6)
BOARD NO.1-622-578-14
BVW-85P(EK) ;#10001-

SY-64P BOARD (6/6)
BOARD NO.1-622-578-14
BVW-85P(EK) ;#10001-

SY-64P(1-622-578-14)
BVW-85P

CN303	H-9	IC39	D-7
CN304	C-9	IC40	C-6
CN305	F-5	IC41	C-4
		IC42	C-4
D2	D-7	IC43	C-2
D3	E-7	IC44	C-2
D4	D-8	IC45	B-8
D5	D-8	IC46	B-6
D6	E-8	IC47	B-6
D17	E-7	IC48	B-4
D18	E-8	IC49	B-4
D19	D-1	IC50	A-3
D20	D-3	IC51	A-2
D21	E-4	IC52	A-8
D302	I-5	IC53	A-4
D303	I-5	IC54	D-1
D304	H-8	IC55	E-1
D305	H-8		
D306	H-8	Q1	G-8
D307	H-9	Q2	F-7
		Q4	D-5
E2	A-1	Q301	G-7
E4	I-6		
E5	E-5	S1	H-1
E6	G-9	S2	G-1
		S3	F-1
IC1	I-8	S4	E-1
IC2	I-7	S6	C-1
IC3	I-6	S7	B-1
IC4	I-3		
IC5	H-8	TP6	F-2
IC6	H-6	TP8	F-4
IC7	H-7	TP9	F-4
IC9	H-6	TP13	B-4
IC10	H-4	TP14	G-8
IC11	H-4	TP15	B-2
IC12	H-3	TP16	B-1
IC15	G-7	TP18	B-2
IC16	G-6	TP306	G-6
IC17	F-8	TP307	G-7
IC18	F-7	TP308	F-5
IC19	E-6	TP309	F-4
IC20	F-5	TP402	I-6
IC21	F-4	TP403	I-6
IC22	G-4	TP404	I-6
IC23	F-3	TP405	I-6
IC24	F-2		
IC25	E-5	X1	F-1
IC26	F-4	X301	I-2
IC27	E-3		
IC28	E-3		
IC29	E-2		
IC30	E-8		
IC31	D-7		
IC32	E-4		
IC33	D-3		
IC34	D-3		
IC35	D-2		
IC36	D-2		
IC37	C-8		
IC38	C-8		

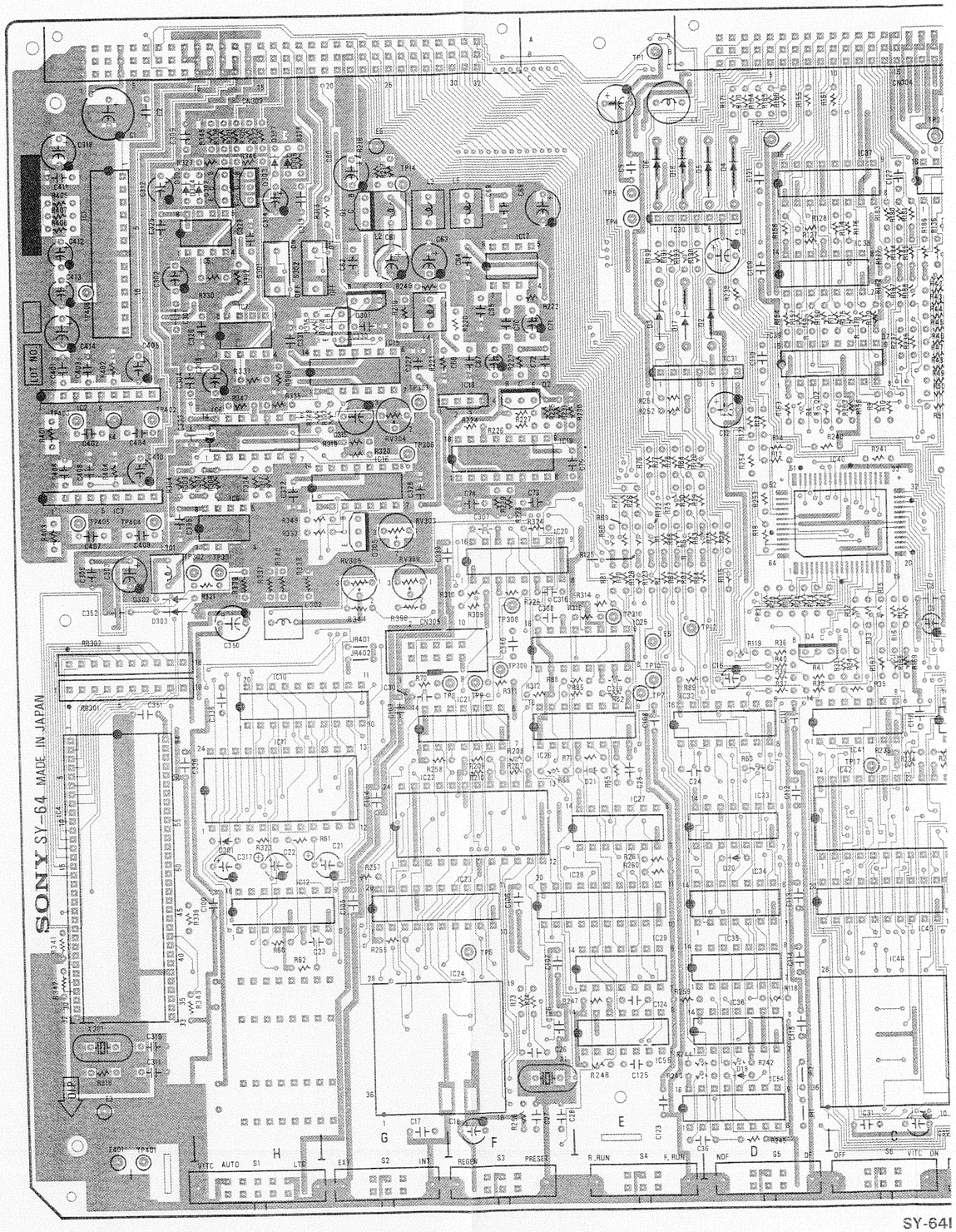

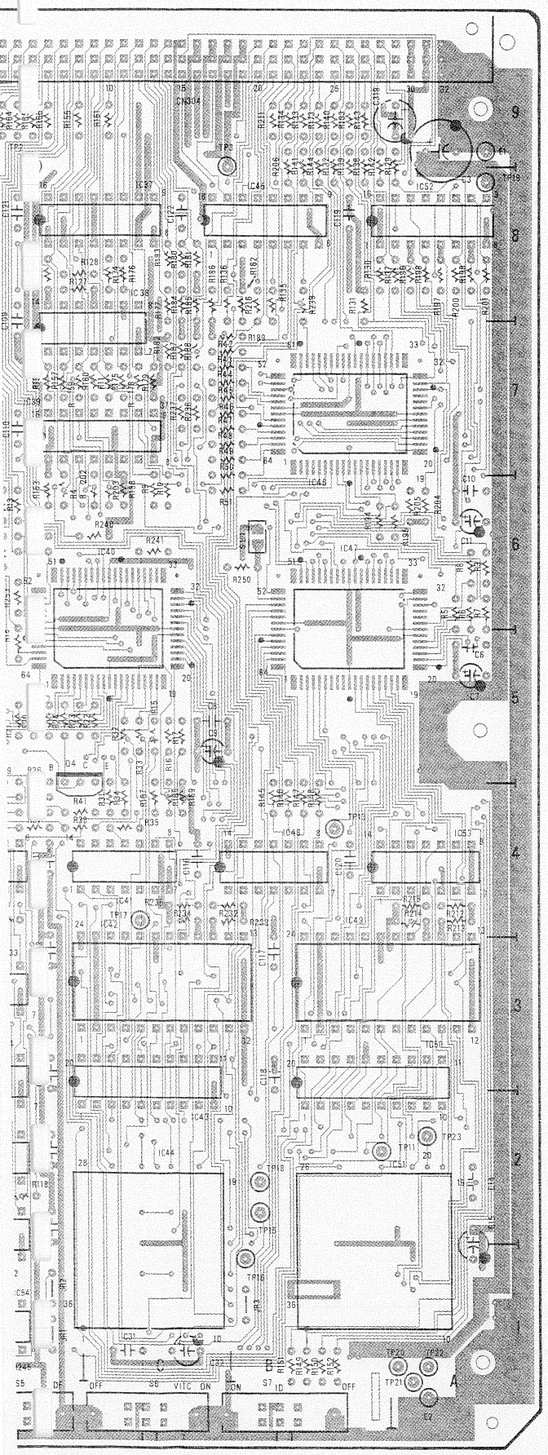

SY-64P 1-622-578-14 COMPONENT SIDE

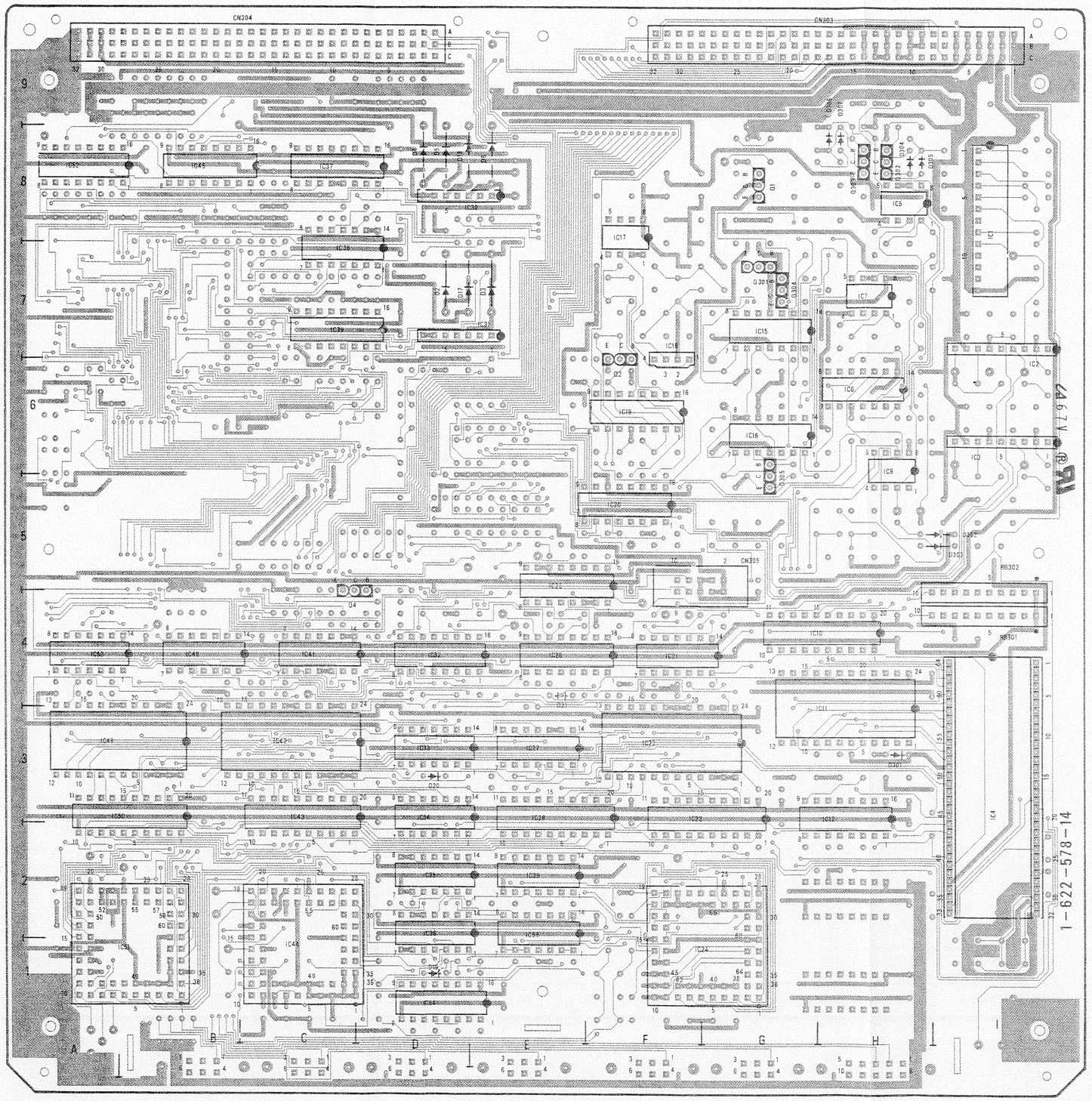

SY-64P 1-622-578-14 SOLDER SIDE

CCM-2; UP/DOWN MOTOR
CL-14; CASSETTE-UP COMPARTMENT
CL-24; CASSETTE-UP COMPARTMENT LED
HC-11; HOURS METER
PC-47; LARGE/SMALL CASSETTE DETECTOR
PC-33; CASSETTE DOWN DETECTOR
PC-41; CASSETTE IN DETECTOR
PD-35; PINCH/CLEANING SOLENOID
PTC-15; THREAD/UNTHREAD END SENSOR

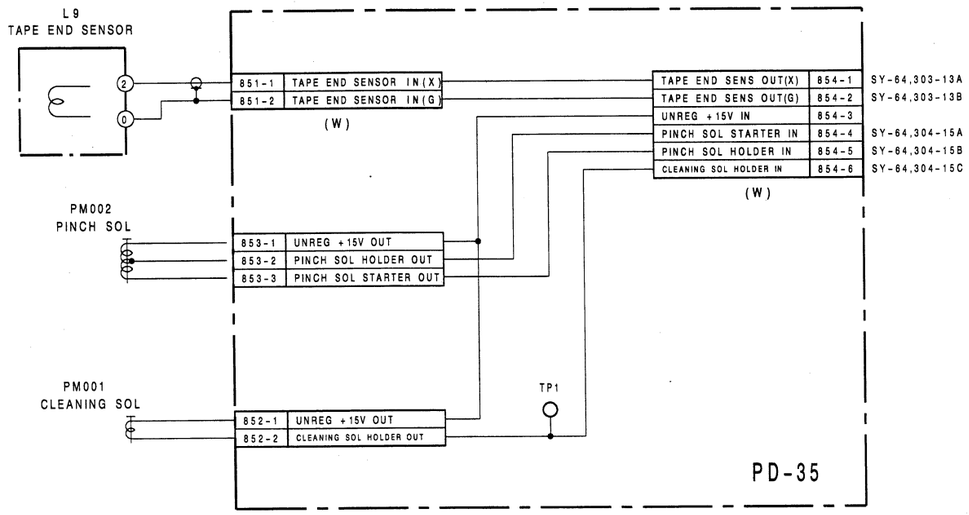

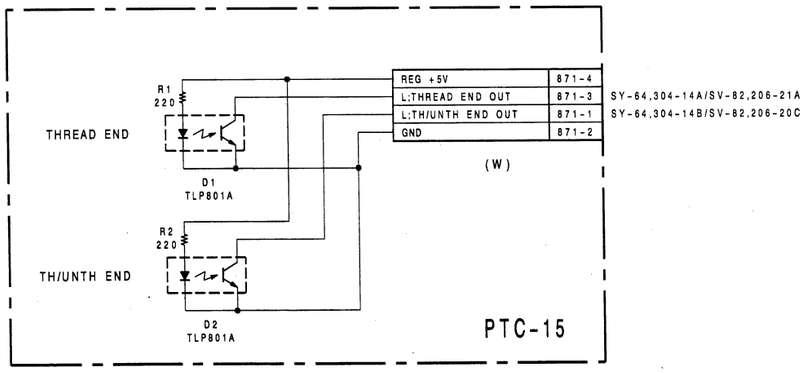

PD-35 BOARD
BOARD NO.1-622-596-11
BVW-85P(EK);#10001-

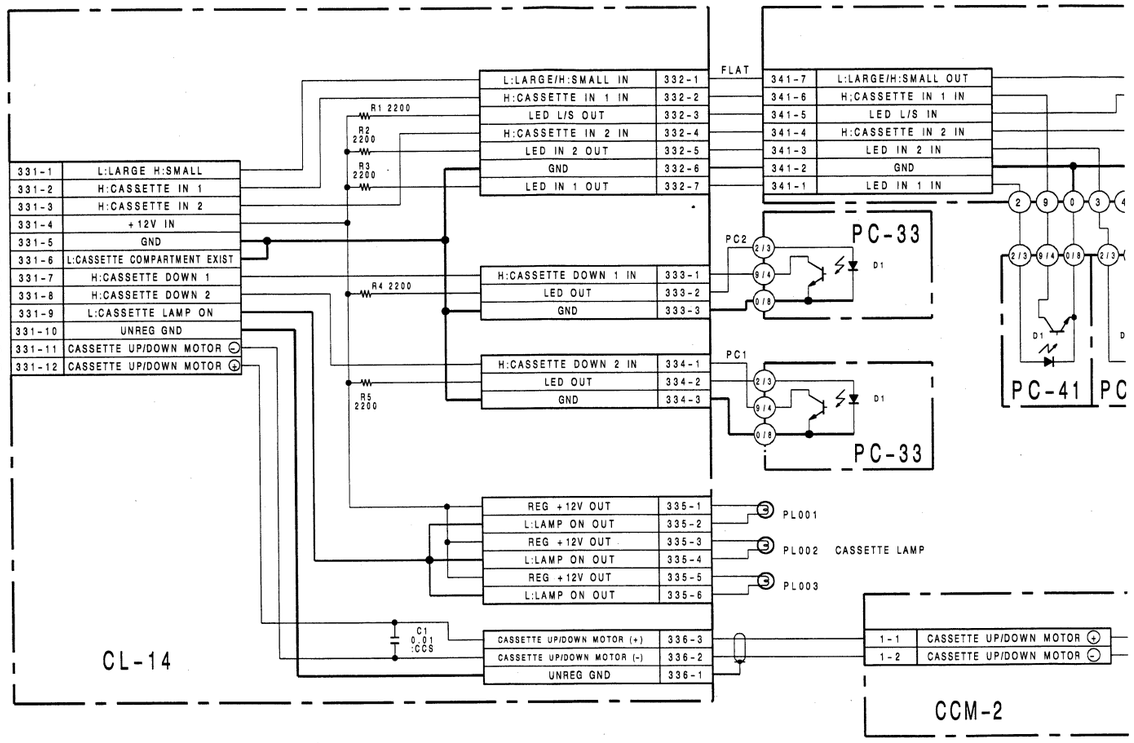

CL-14
BOARD NO.1-622
BVW-85P(EK);#1

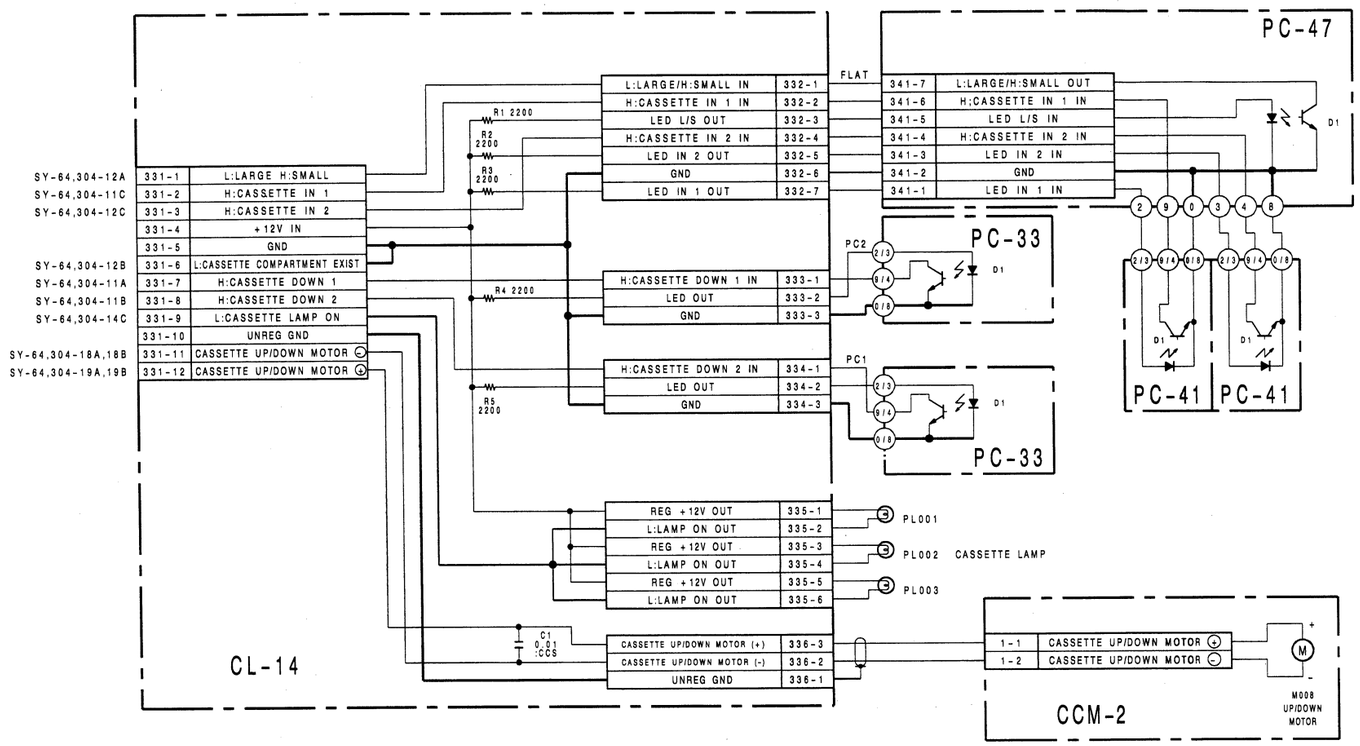

CL-14 BOARD
BOARD NO.1-622-602-11
BVW-85P(EK);#10001-

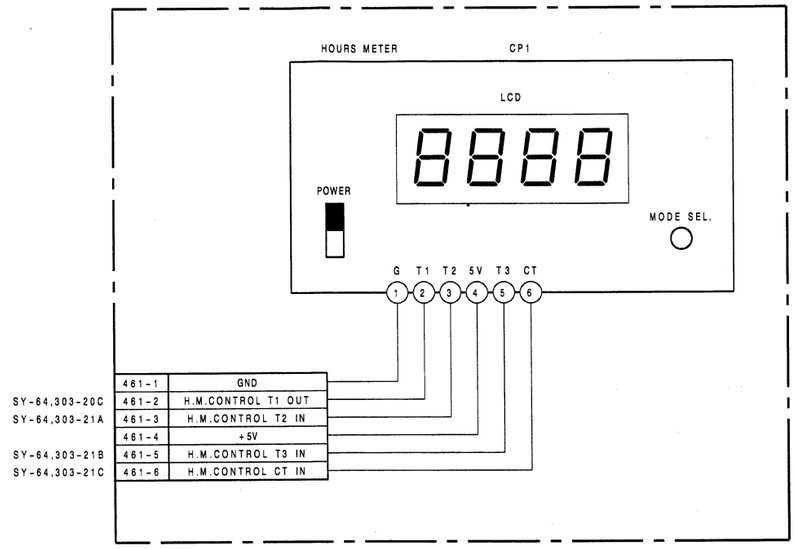

HC-11 BOARD
BOARD NO.1-622-595-11
BVW-85P(EK);#10001-

14A -82.206-21A
14B -82.206-20C

PD-35; PINCH/CLEANING SOLENOID
PTC-15; THREADING/UNTHREADING END SENSOR
CL-14; CASSETTE-UP COMPARTMENT
CL-24; CASSETTE-UP COMPARTMENT LED
PC-33; CASSETTE DOWN DETECTOR
PC-41; CASSETTE IN DETECTOR
PC-47; LARGE/SMALL CASSETTE DETECTOR
CCM-2; CASSETTE-UP COMPARTMENT UP/DOWN MOTOR
HC-11; HOURS METER

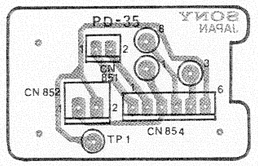

PD-35 1-622-596-11 COMPONENT SIDE

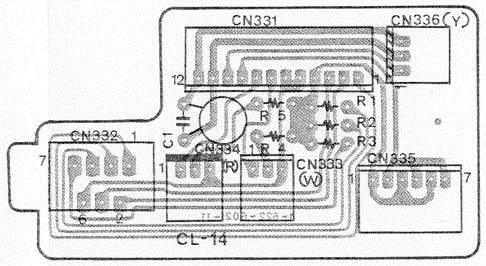

CL-14 1-622-602-11 COMPONENT SIDE

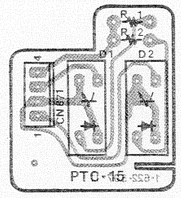

PTC-15 1-622-597-11
COMPONENT SIDE

PD-35; PINCH/CLEANING SOLENOID
PTC-15; THREADING/UNTHREADING END SENSOR
CL-14; CASSETTE-UP COMPARTMENT
CL-24; CASSETTE-UP COMPARTMENT LED
PC-33; CASSETTE DOWN DETECTOR
PC-41; CASSETTE IN DETECTOR
PC-47; LARGE/SMALL CASSETTE DETECTOR
CCM-2; CASSETTE-UP COMPARTMENT UP/DOWN MOTOR
HC-11; HOURS METER

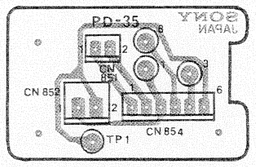

PD-35 1-622-596-11 COMPONENT SIDE

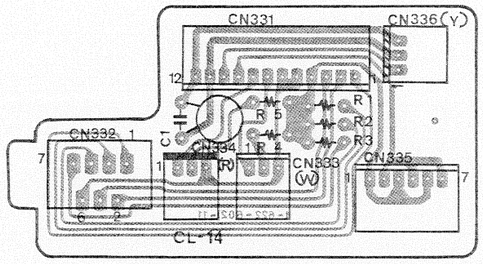

CL-14 1-622-602-11 COMPONENT SIDE

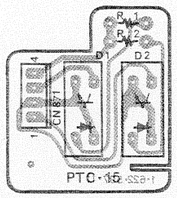

PTC-15 1-622-597-11
COMPONENT SIDE

CL-24 1-635-029-11 COMPONENT SIDE

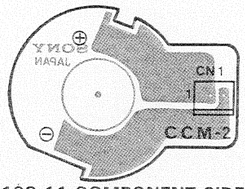

CCM-2 1-623-198-11 COMPONENT SIDE

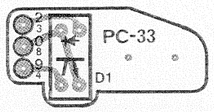

PC-33 1-622-604-11
COMPONENT SIDE

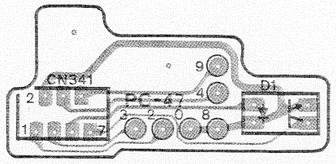

PC-47 1-628-786-11 COMPONENT SIDE

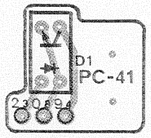

PC-41 1-623-267-11
COMPONENT SIDE

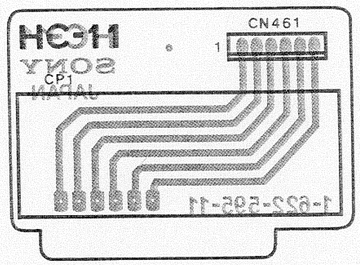

HC-11 1-622-595-11 COMPONENT SIDE

KY-188PC KY-205,KY-206,DP-136,PTC-39,PT-9

KY-188PC; KEYBOARD
KY-205; KEYBOARD
KY-206; KEYBOARD
DP-136; TIME COUNTER DISPLAY
PTC-39; SEARCH DIAL
PT-9; POWER TRANSISTOR

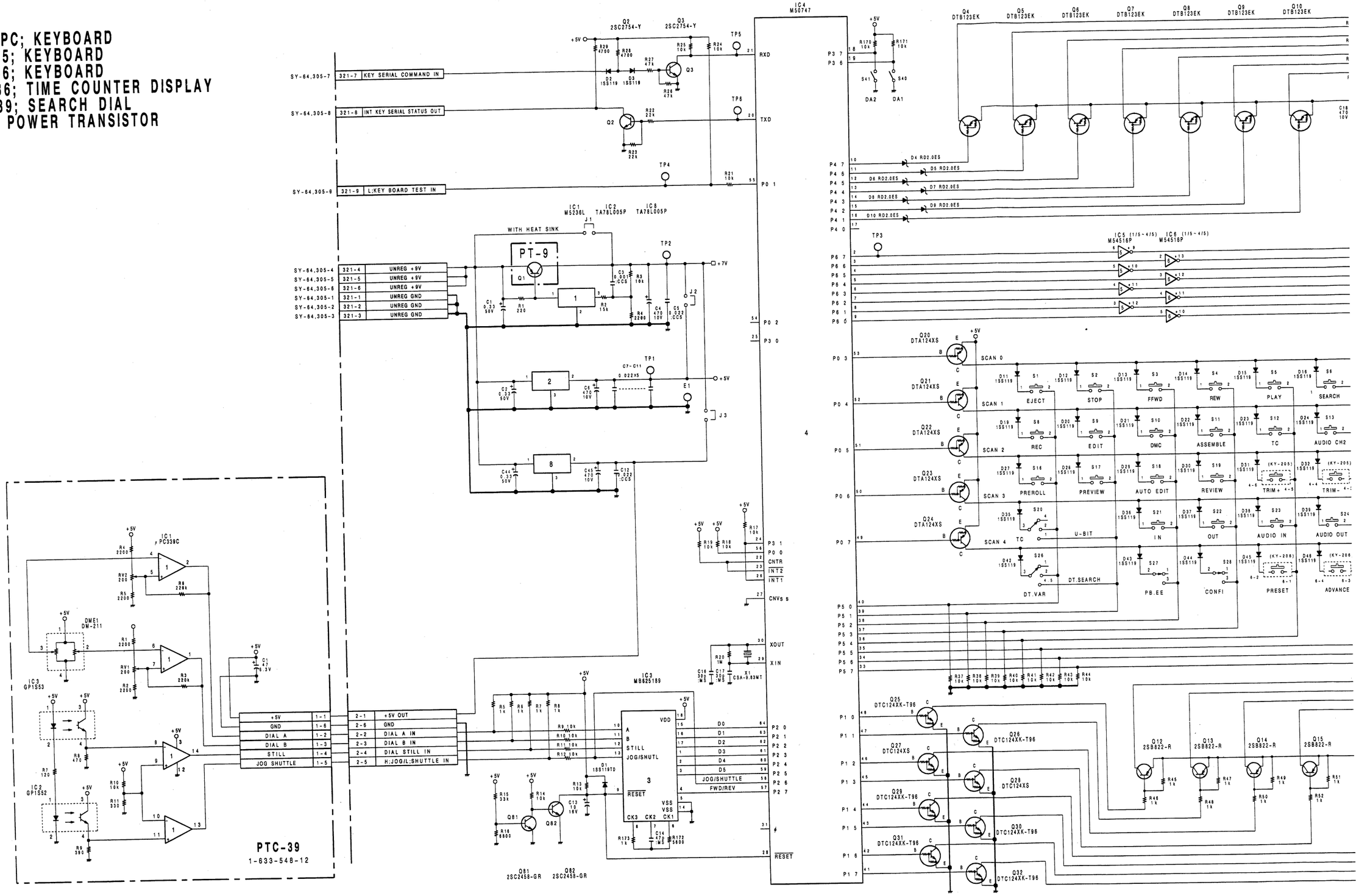

KY-188PC KY-205,KY-206,DP-136,PTC-39,PT-9

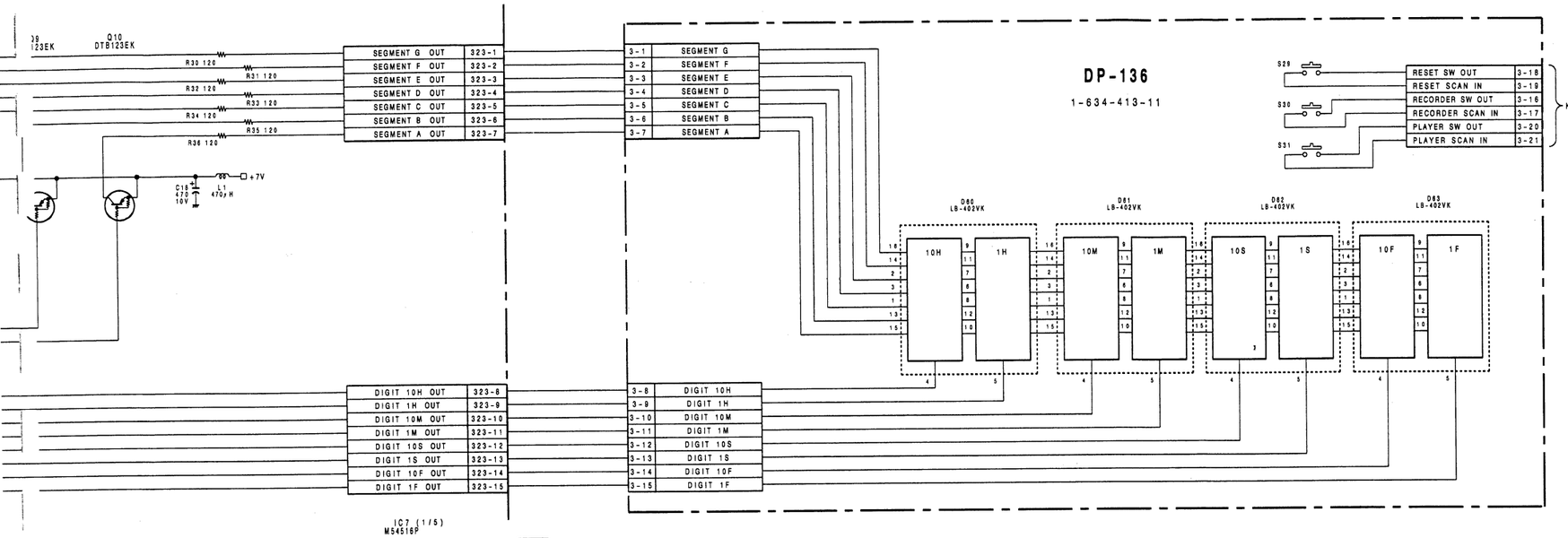

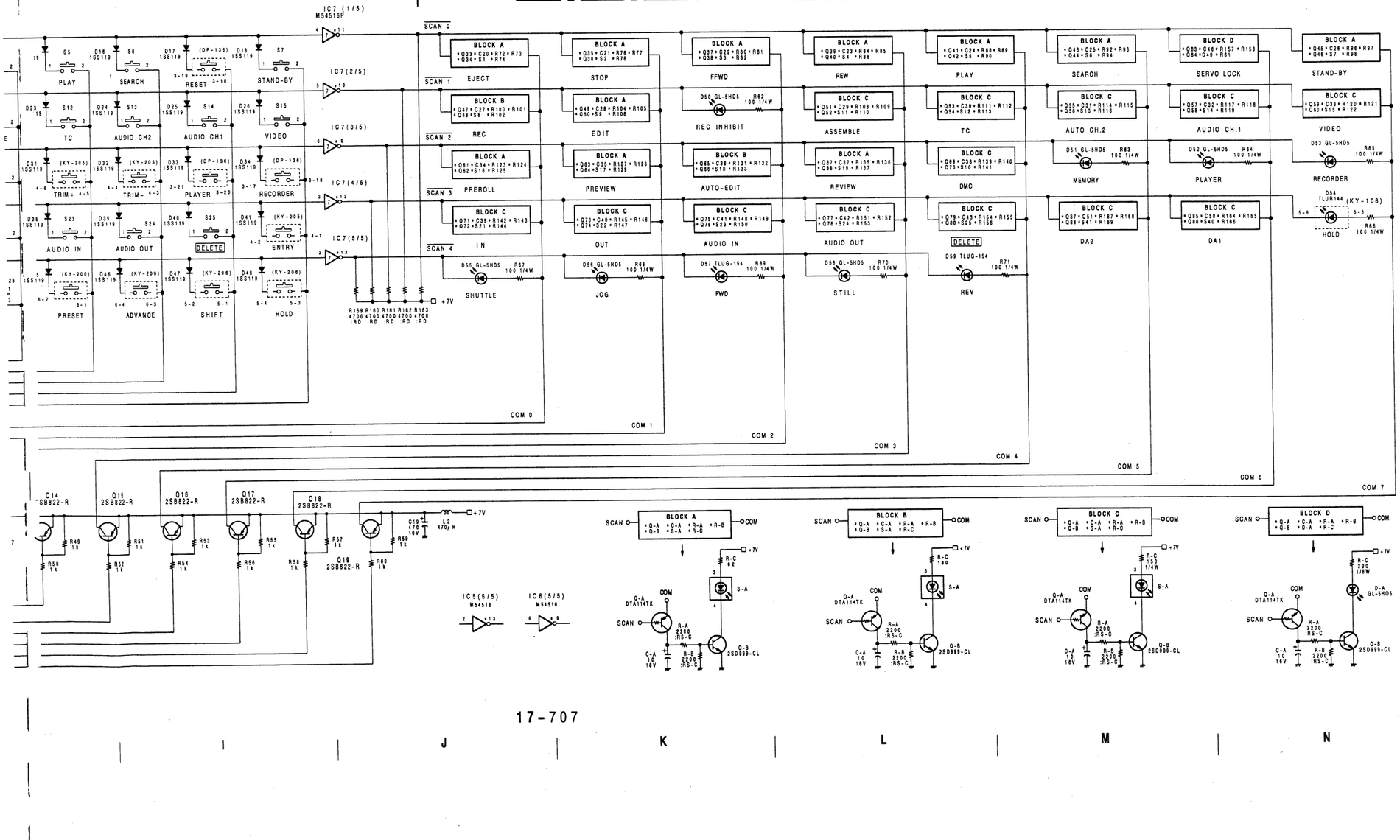

KY-188PC BOARD
BOARD NO.1-633-813-11
BVW-85P(EK) ;#10001-

KY-188PC KY-205,206

KY-188PC(1-633-813-11)

BVW-85P

D1	F-1	IC1	H-2	*Q55	B-1	S27	F-1
D2	D-1	IC2	H-2	*Q56	B-1	S28	E-1
D3	D-1	IC3	F-2	*Q57	B-1	S40	A-1
D4	I-1	IC4	D-3	*Q58	A-1	S41	B-1
D5	I-1	IC5	I-2	*Q59	A-1		
D6	I-1	IC6	H-3	*Q60	A-1	TP2	D-3
D7	I-1	IC7	B-2	*Q61	F-1	TP3	I-2
D8	I-1	IC8	H-2	*Q62	F-2	TP4	E-1
D9	I-1			*Q63	A-2	TP5	D-1
D10	I-1	Q2	C-1	*Q64	A-3	TP6	D-1
D11	E-3	Q3	D-1	*Q65	B-3		
D12	H-3	*Q4	I-1	*Q66	A-3	X1	D-1
D13	G-3	*Q5	I-1	*Q67	B-3		
D14	F-3	*Q6	I-1	*Q68	B-3		
D15	G-3	*Q7	I-1	*Q69	A-2		
D16	I-3	*Q8	I-1	*Q70	A-2		
D17	J-1	*Q9	I-1	*Q71	C-3		
D18	F-2	*Q10	I-1	*Q72	C-3		
D19	G-1	Q12	B-2	*Q73	D-3		
D20	G-2	Q13	A-2	*Q74	C-3		
D21	A-2	Q14	A-2	*Q75	C-1		
D22	A-1	Q15	A-2	*Q76	C-2		
D23	B-1	Q16	A-2	*Q77	D-2		
D24	B-1	Q17	A-2	*Q78	D-2		
D25	B-1	Q18	B-2	*Q79	B-2		
D26	A-1	Q19	B-2	*Q80	B-2		
D27	F-2	Q20	B-2	Q81	E-2		
D28	A-2	Q21	B-2	Q82	F-2		
D29	A-2	Q22	B-2	*Q83	G-2		
D30	B-3	Q23	B-2	*Q84	G-3		
D31	C-2	Q24	B-2	*Q85	B-2		
D32	C-2	*Q25	E-2	*Q86	A-2		
D33	J-1	*Q26	E-2	*Q87	B-1		
D34	J-1	Q27	B-2	*Q88	B-2		
D35	H-1	Q28	B-2				
D36	C-3	*Q29	E-2	S1	E-3		
D37	C-3	*Q30	E-2	S2	H-3		
D38	C-2	*Q31	E-2	S3	H-3		
D39	C-2	*Q32	E-2	S4	F-3		
D40	B-2	*Q33	E-2	S5	G-3		
D41	C-2	*Q34	E-3	S6	I-3		
D42	K-1	*Q35	H-2	S7	F-2		
D43	E-1	*Q36	H-3	S8	G-2		
D44	E-1	*Q37	G-2	S9	G-2		
D45	F-1	*Q38	G-3	S10	A-2		
D46	F-1	*Q39	G-3	S11	A-1		
D47	G-1	*Q40	F-3	S12	C-1		
D48	G-1	*Q41	G-2	S13	B-1		
D49	G-2	*Q42	G-3	S14	B-1		
D50	G-1	*Q43	H-2	S15	A-1		
D51	A-2	*Q44	I-3	S16	F-2		
D52	H-2	*Q45	E-1	S17	A-3		
D53	I-2	*Q46	E-2	S18	A-3		
D55	H-2	*Q47	G-1	S19	B-3		
D56	I-2	*Q48	G-2	S20	H-1		
D57	K-1	*Q49	G-2	S21	C-3		
D58	J-1	*Q50	G-2	S22	D-3		
D59	J-1	*Q51	A-1	S23	C-2		
		*Q52	A-1	S24	C-2		
E1	Q-2	*Q53	B-1	S25	B-2		
		*Q54	B-1	S26	K-1		

*: SOLDERING SIDE

KY-188PC; KEYBOARD
KY-205; KEYBOARD
KY-206; KEYBOARD

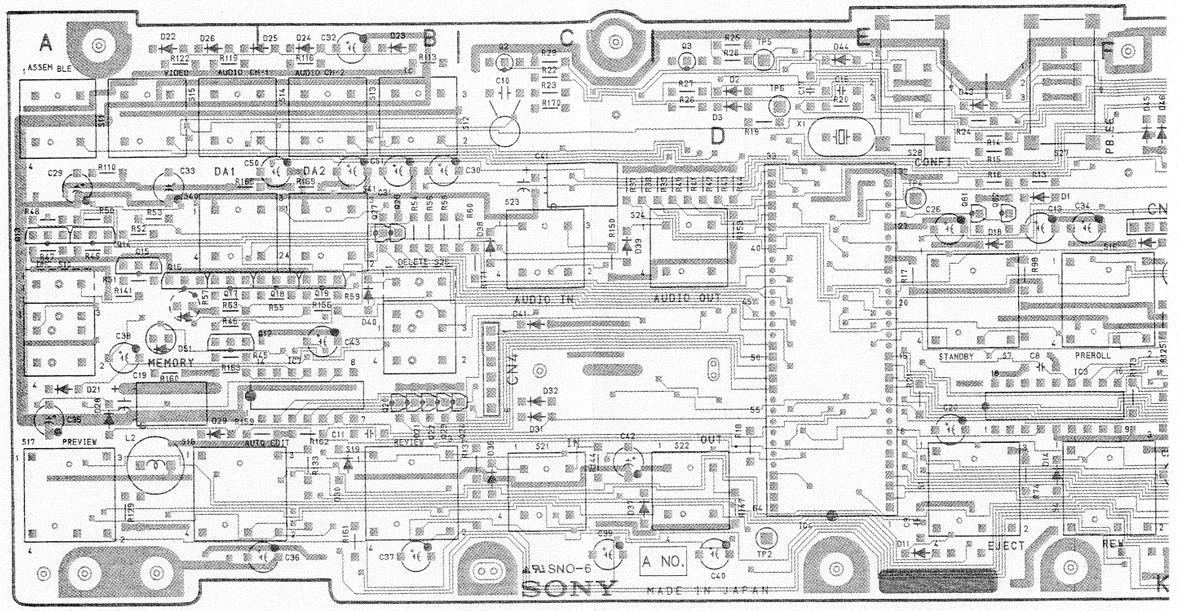

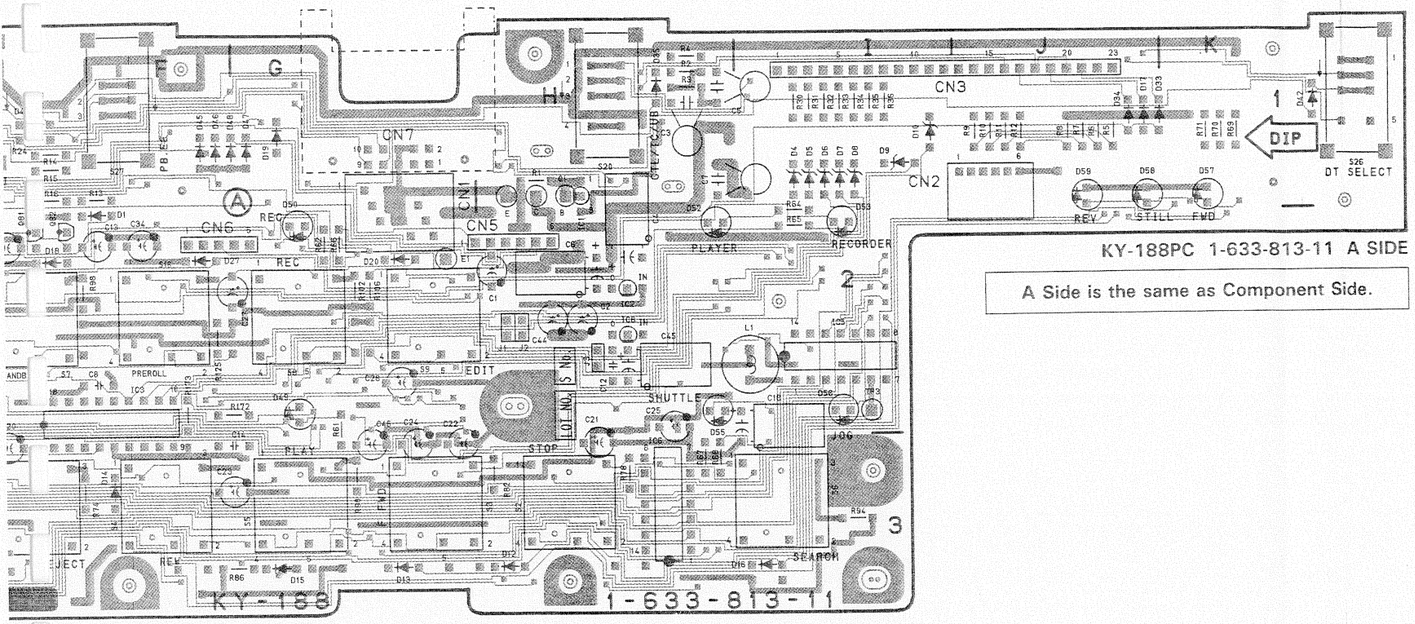

KY-188PC 1-633-813-11 A SIDE

A Side is the same as Component Side.

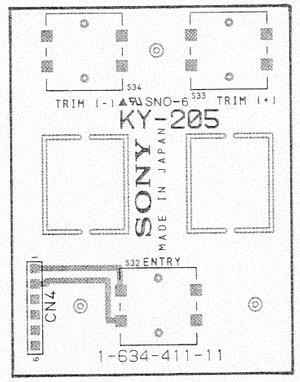

KY-205 1-634-411-11 A SIDE

A Side is the same as Component Side.

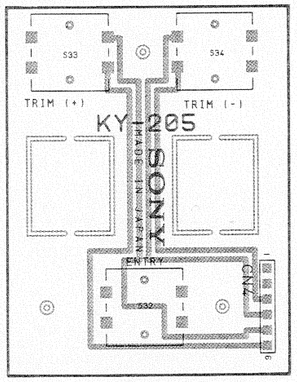

KY-205 1-634-411-11 B SIDE

B Side is the same as Solder Side.

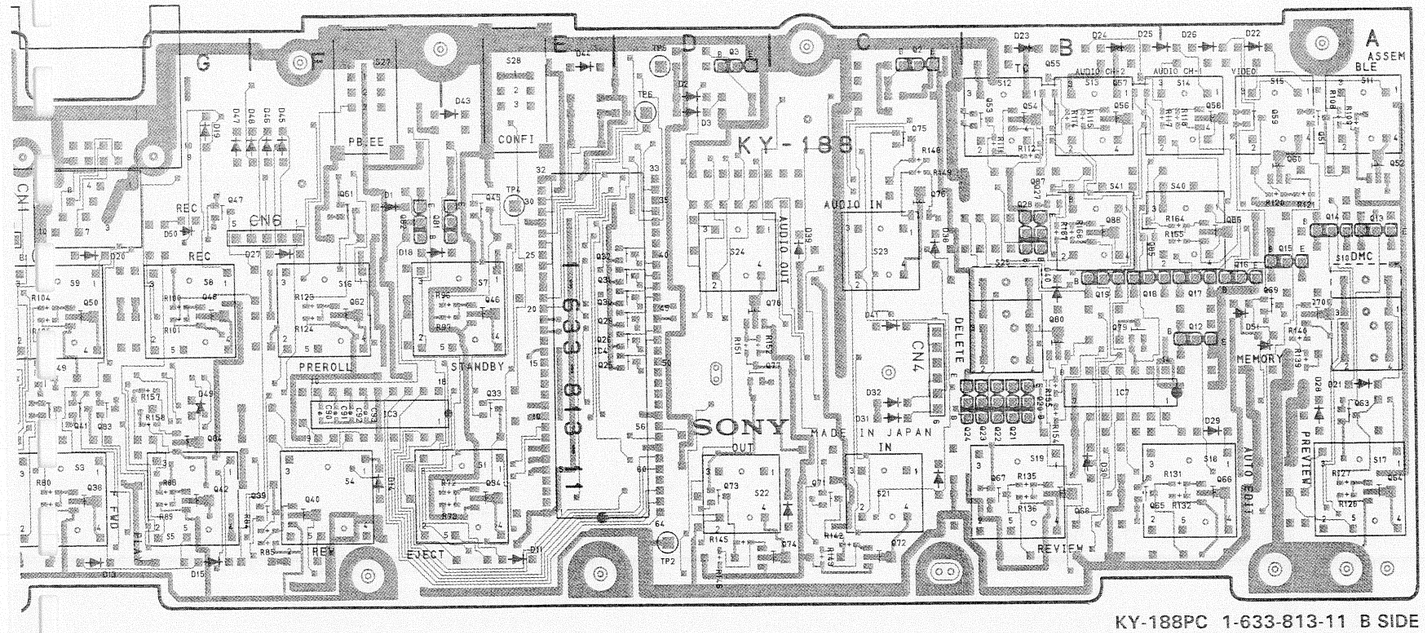

KY-188PC 1-633-813-11 B SIDE

B Side is the same as Solder Side.

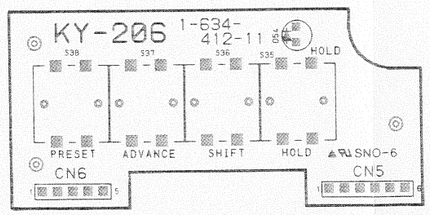

KY-206 1-634-412-11 A SIDE

A Side is the same as Component Side.

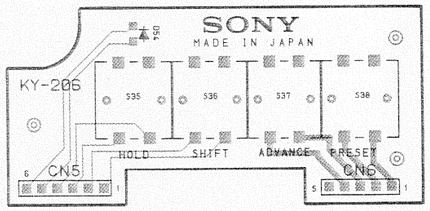

KY-206 1-634-412-11 B SIDE

B Side is the same as Solder Side.

DP-136; TIME COUNTER DISPLAY
PTC-39; SEARCH DIAL
PT-9; POWER TRANSISTOR

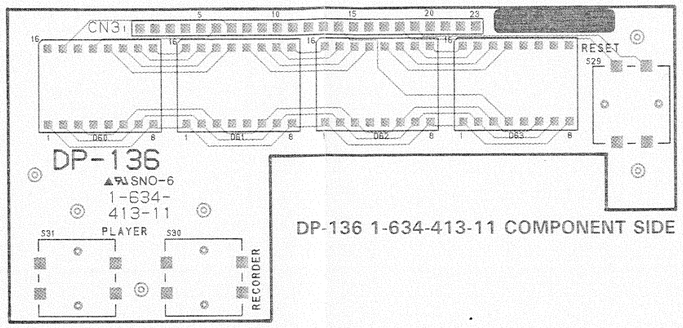

DP-136 1-634-413-11 COMPONENT SIDE

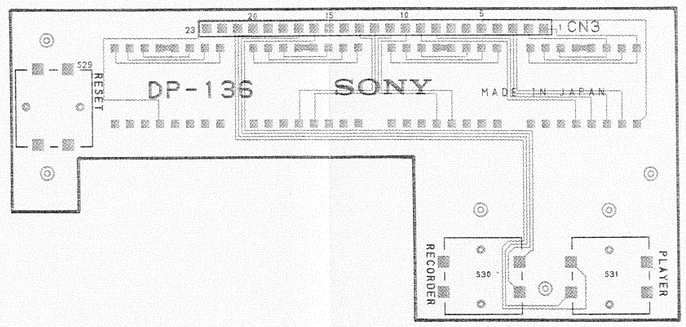

DP-136 1-634-413-11 SOLDER SIDE

DP-136; TIME COUNTER DISPLAY
PTC-39; SEARCH DIAL
PT-9; POWER TRANSISTOR

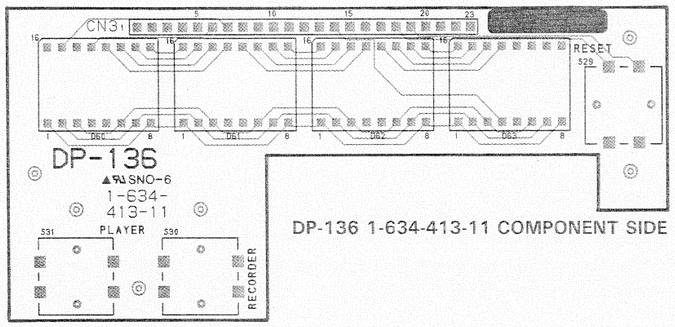

DP-136 1-634-413-11 COMPONENT SIDE

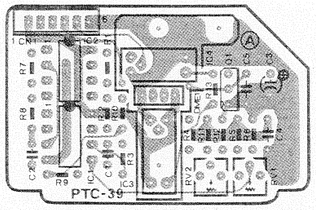

PTC-39 1-633-548-12 A SIDE

A Side is the same as Component Side.

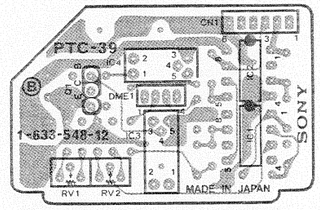

PTC-39 1-633-548-12 B SIDE

B Side is the same as Solder Side.

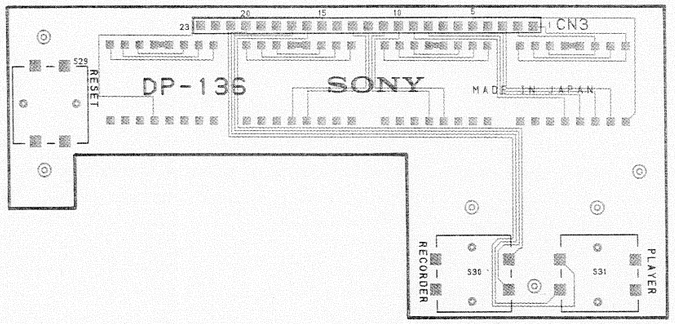

DP-136 1-634-413-11 SOLDER SIDE

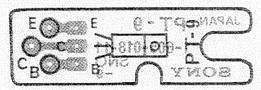

PT-9 1-605-018-11 SOLDER SIDE

TC-40P(1/3); FULL ERASE OSCILLATOR,CH-1/CH-2/LTC ERASE DRIVER

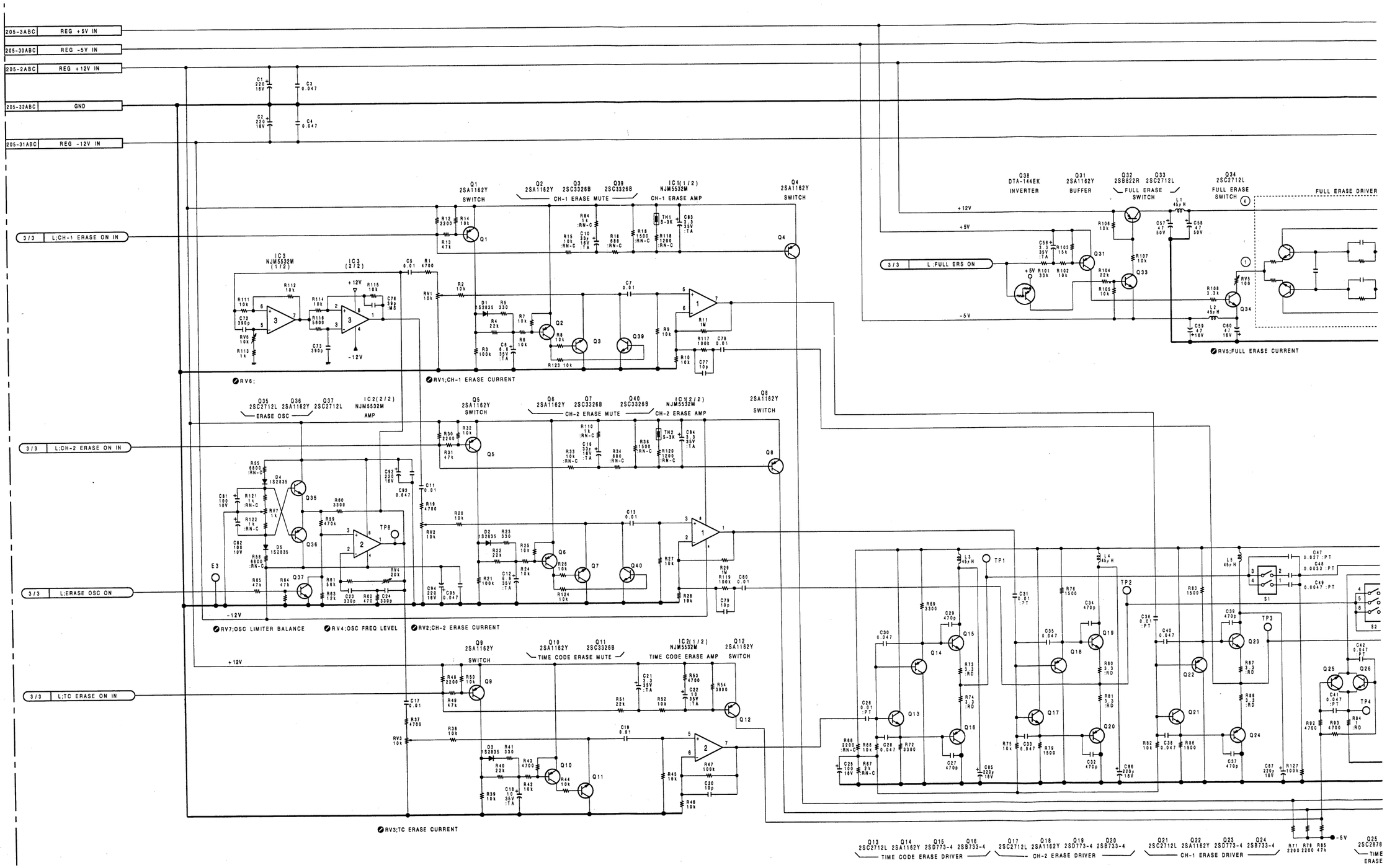

17-727 17-728

A B C D E F G H

TC-40P(1/3)

DRIVER

TC-40P BOARD **(1/3)**

BOARD NO.1-622-579-15

BVW-85P(EK) ;#10001-

TC-40PC(2/3); LTC REC/PB AMPLIFIER
TD-10; TIME CODE AMPLIFIER

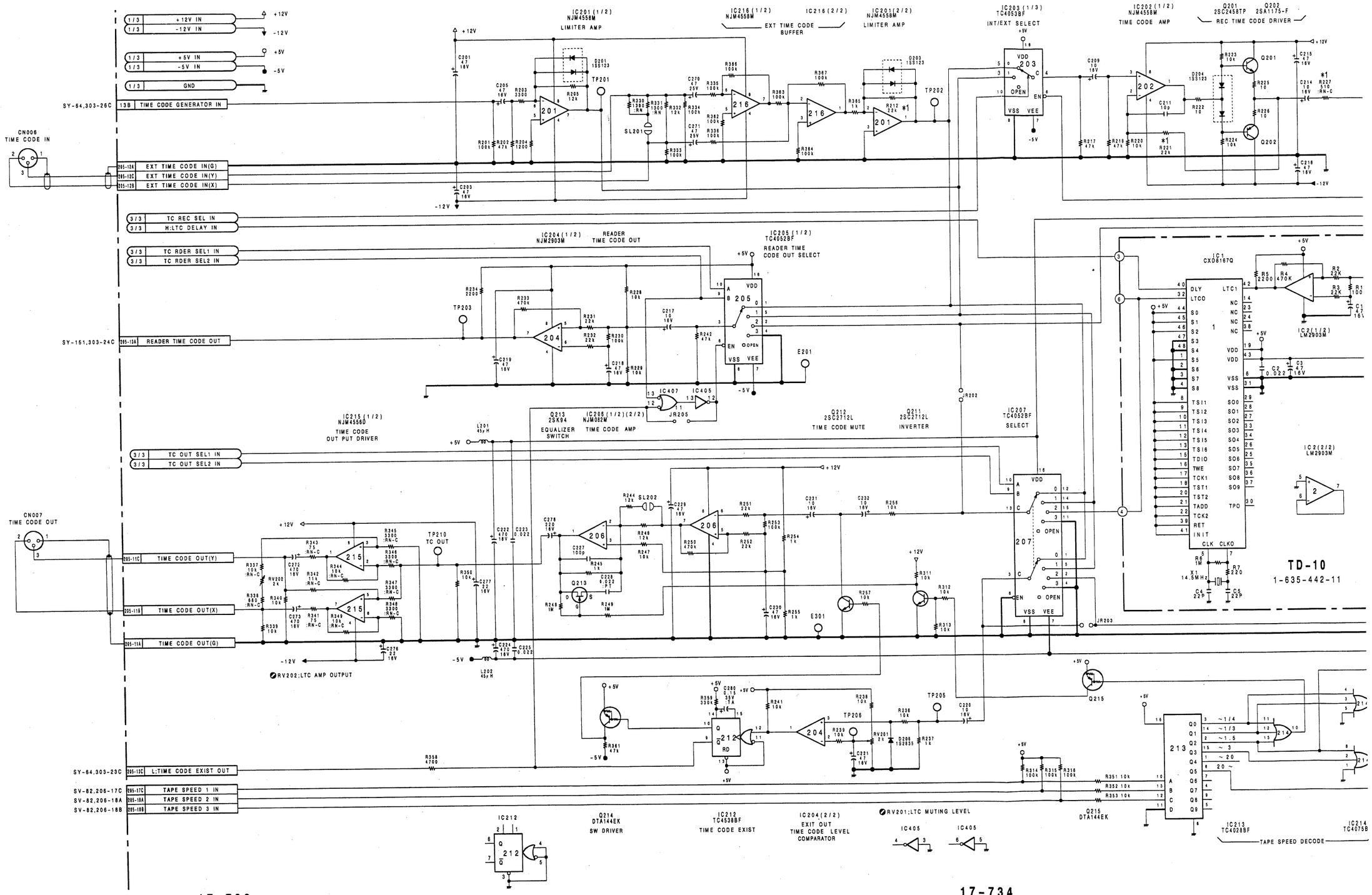

Q202 2SA1175-F
REC TIME CODE DRIVER

Q205 DTA144EK
Q206 DTA144EK
SW DRIVER

Q204 2SC2712L
MUTE

Q203 2SC2712L
TIME CODE REC SIGNAL BUFFER

TIME CODE SIGNAL OUT(X) 205-7B → AU-75,203-5C/AU-76,204-5A
TIME CODE SIGNAL OUT(G) 205-7A → AU-75,203-6C/AU-76,204-5B
L:TC REC IN 3/3
L:TC PB IN 3/3
GND 1/3
L:METAL/H:OXIDE IN 205-14A
H: BIAS ON IN 3/3

SY-84,304-2A
MD-46,104-15C
DM-56,111-15C
DEC-42,113-6C
RP-48(X),647-3
RP-48(C),648-3
BF-28,640-7
AFM-1,202-27C
AU-75,203-28A
AU-76,204-28B
SV-122,208-20C

IC2(1/3) LM2903M
IC2(2/2) LM2903M

IC208(2/2) NJM4558M AMP
IC208(3/3) TC4053BF GAIN SW
IC208(1/2) NJM4558M LIMITER
IC209(1/3) TC4053BF LPF SW
IC210(1/2) NJM4558M LPF
IC210(2/2) NJM4558M BUFFER
IC209(3/3) TC4053BF
IC211(1/2) NJM4562D-D HEAD AMP
IC211(2/2) NJM4562D-D REC SIGNAL AMP

TIME CODE HEAD(X) 205-5A
TIME CODE HEAD(Y) 205-5B
TIME CODE HEAD(G) 205-5C
GND 205-6A
GND 205-6B
GND 205-6C
GND 205-1ABC
H003 TIME CODE

L:SLOW LPF OUT 205-9B → AU-76,204-14B

Q210 2SC3326B SWITCH
Q209 2SC3326B SWITCH
Q208 2SC3326B HEAD SWITCH
Q207 2SC3326B HEAD SWITCH

TD-10
1-635-442-11

NOTE:

ADDRESS	MARK	CHANGE INFORMATION	SERIAL NO.
F2,H2	*1	R212;3900 TO 22K R221;270K TO 22K R227;4300 TO 510	#10074-

IC214 TC4075BF
TAPE SPEED DECODE

TC-40P BOARD (2/3)

BOARD NO.1-622-579-15
BVW-85P(EK) ;#10001-

17-735 17-736

I J K L M N O

1 2 3 4 5

TC-40P(3/3); TIMING GENERATOR

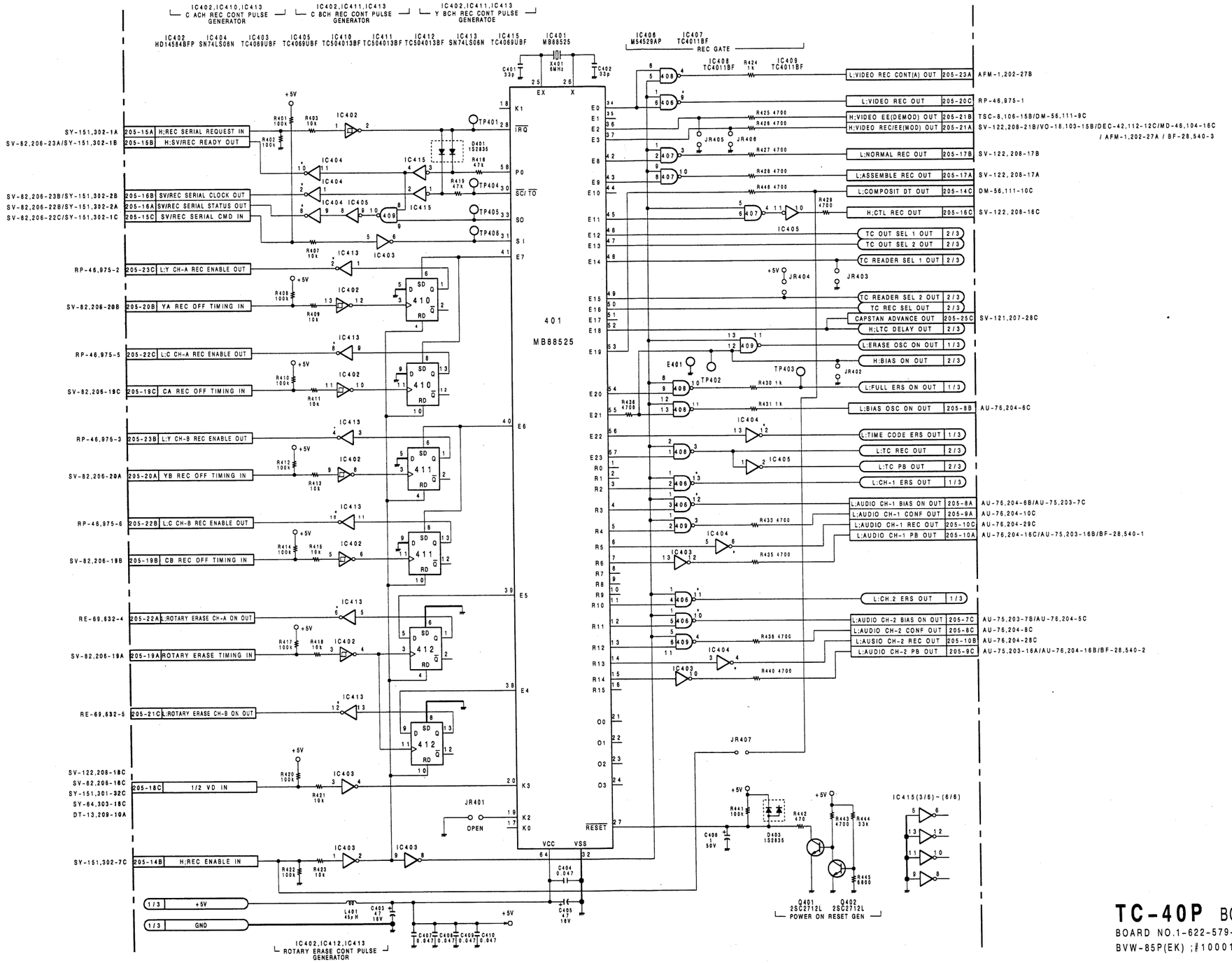

TC-40P BOARD (3/3)

BOARD NO.1-622-579-15
BVW-85P(EK) ;#10001-

TC-40PC; LTC REC/PB AMPLIFIER, ERASE DRIVER
TD-10; TIME CODE AMPLIFIER

TC-40P(1-622-579-15)
BVW-85P

CN205	I-4	*Q9	B-2	S2	A-5
		*Q10	B-1	S3	C-5
*D1	B-2	*Q11	B-1		
*D2	B-3	*Q12	A-2	TH1	A-2
*D3	B-2	*Q13	A-4	TH2	A-3
*D4	C-1	*Q14	B-4		
*D5	D-2	Q15	B-5	TP1	B-5
*D201	G-4	Q16	A-5	TP2	A-5
*D203	F-4	*Q17	A-4	TP3	C-5
*D204	F-5	*Q18	A-4	TP4	B-6
*D206	E-4	Q19	A-5	TP5	A-6
*D207	E-1	Q20	A-5	TP6	B-6
*D401	D-6	*Q21	B-4	TP7	C-4
*D403	G-6	*Q22	B-4	TP8	C-1
		Q23	C-5	TP201	F-4
E1	B-6	Q24	B-5	TP202	F-4
E301	D-1	Q25	B-6	TP203	E-4
E401	C-5	Q26	B-7	TP207	A-1
		Q27	B-6	TP208	I-2
IC1	C-3	Q28	A-7	TP209	H-4
IC2	C-1	Q29	B-6	TP210	D-1
IC3	B-2	Q30	C-7	TP211	H-4
IC201	G-4	*Q31	D-5	TP212	H-4
IC202	G-4	Q32	D-4	TP402	A-7
IC203	F-3	*Q33	D-5	TP403	C-5
IC204	F-4	*Q34	D-5		
IC205	E-3	*Q35	D-1	X401	E-7
IC206	E-2	*Q36	C-1		
IC207	F-2	*Q37	C-2		
IC208	F-1	*Q38	C-5		
IC209	G-2	*Q39	C-2		
IC210	G-2	*Q40	C-3		
IC211	H-1	Q201	G-4		
IC212	E-5	Q202	G-5		
IC213	H-4	*Q203	H-3		
IC214	H-3	*Q204	H-3		
IC215	D-2	*Q205	G-5		
IC216	G-4	*Q206	F-3		
IC401	D-5	*Q207	I-2		
IC402	H-6	*Q208	H-2		
IC403	E-7	*Q209	H-3		
IC404	G-6	*Q210	H-3		
IC405	F-7	*Q211	E-2		
IC406	C-6	*Q212	E-1		
IC407	E-7	*Q213	D-2		
IC408	D-7	*Q214	D-4		
IC409	D-7	*Q215	E-2		
IC410	G-7	*Q401	G-6		
IC411	G-7	*Q402	H-6		
IC412	H-7				
IC413	I-7	RV1	C-2		
IC415	G-5	RV2	C-2		
		RV3	B-1		
*Q1	B-2	RV4	B-1		
*Q2	B-2	RV5	D-4		
*Q3	C-2	RV6	C-2		
*Q4	A-3	RV7	D-1		
*Q5	B-3	RV202	D-4		
*Q6	C-3				
*Q7	C-3	S1	B-5		
*Q8	A-3				

* : SOLDERING SIDE

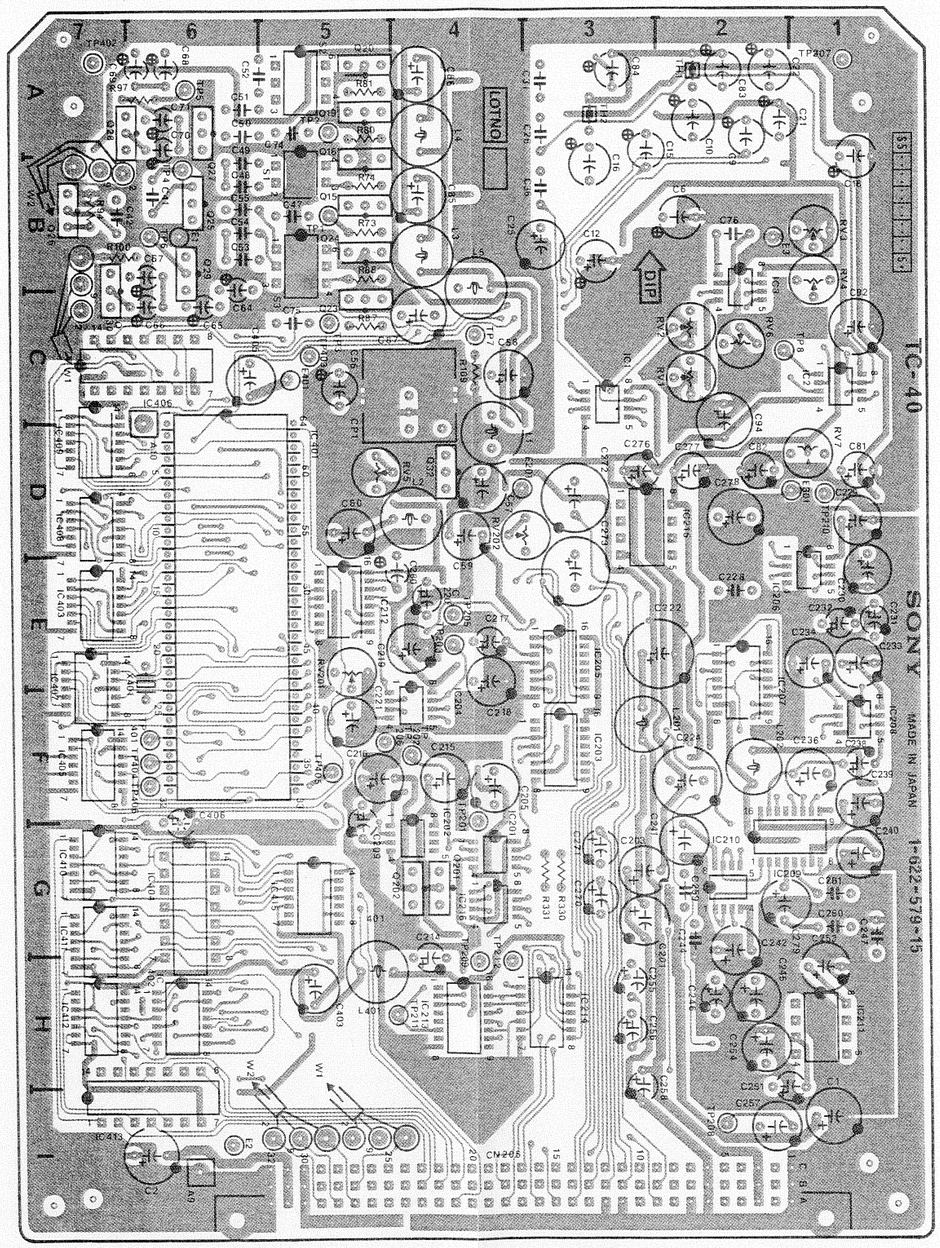

TC-40PC 1-622-579-15 COMPONENT SIDE

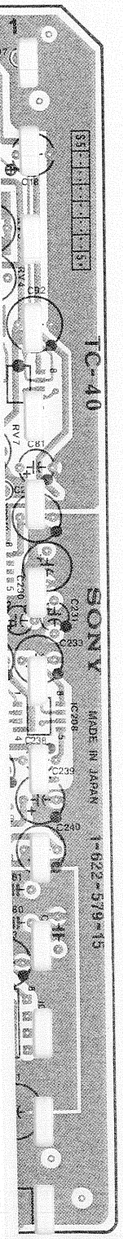

NENT SIDE

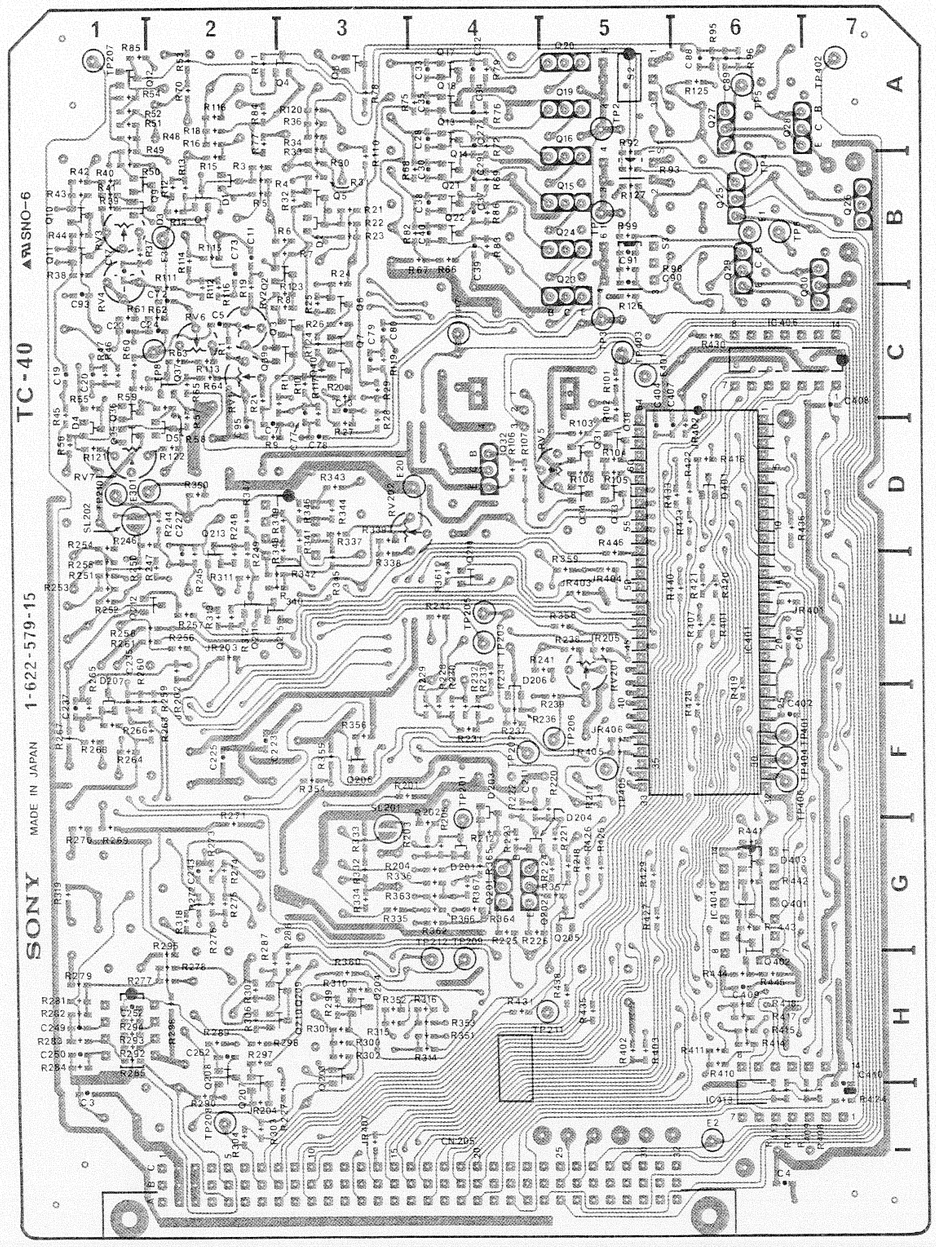

TC-40PC 1-622-579-15 SOLDER SIDE

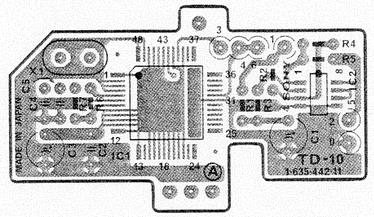

TD-10 1-635-442-11 A SIDE

A Side is the same as Component Side.

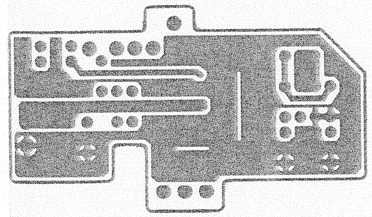

TD-10 1-635-442-11 B SIDE

B Side is the same as Solder Side.

AC-96; RELAY BOARD OF AC INLET
C1; SWITCHING REGULATOR
C2; SWITCHING REGULATOR
M1; SWITCHING REGULATOR
M2; SWITCHING REGULATOR

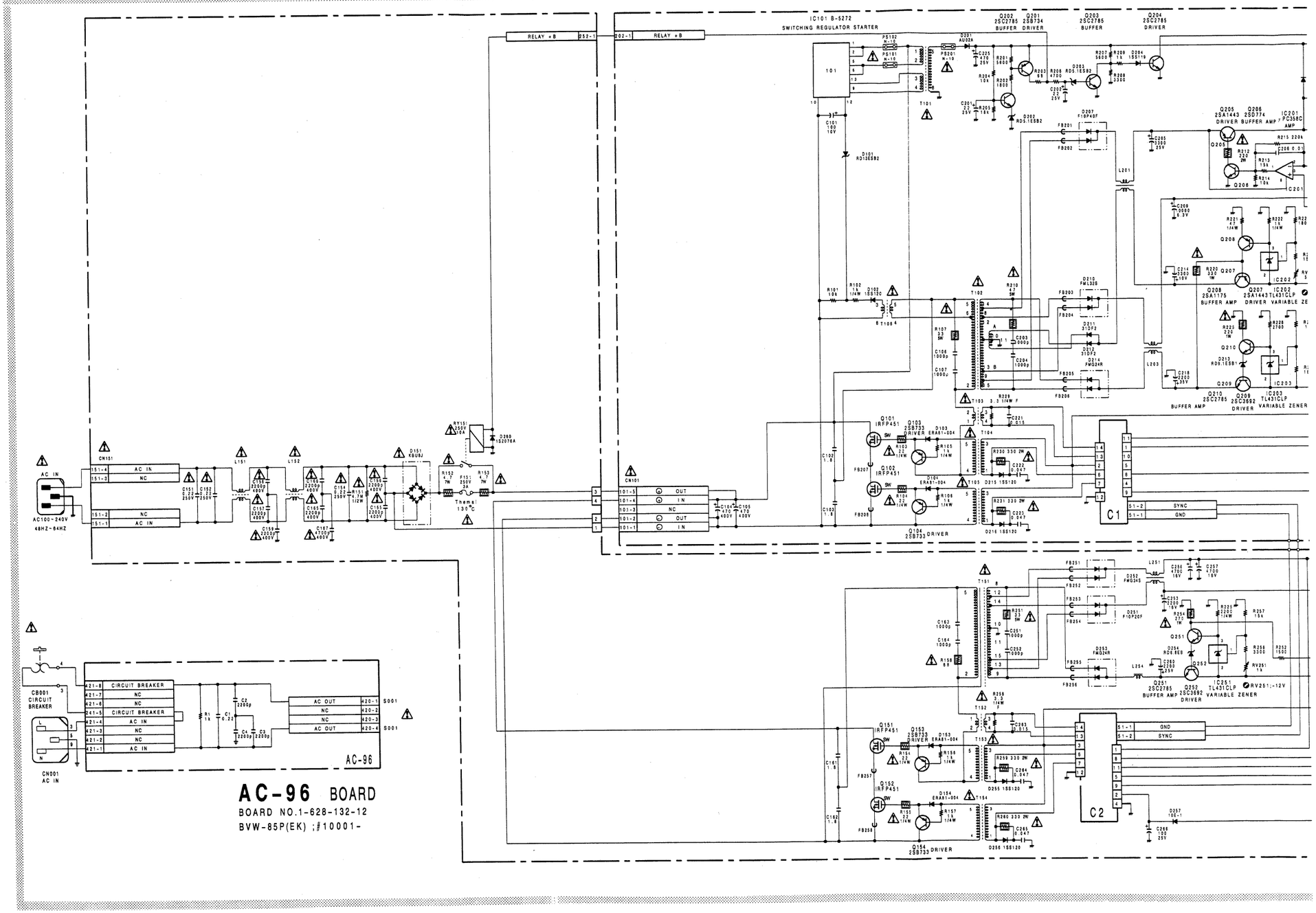

AC-96 BOARD
BOARD NO.1-628-132-12
BVW-85P(EK) ;#10001-

NOTE:

The shaded and ⚠ -marked components are critical to safety.
Replace only with same components as specified.

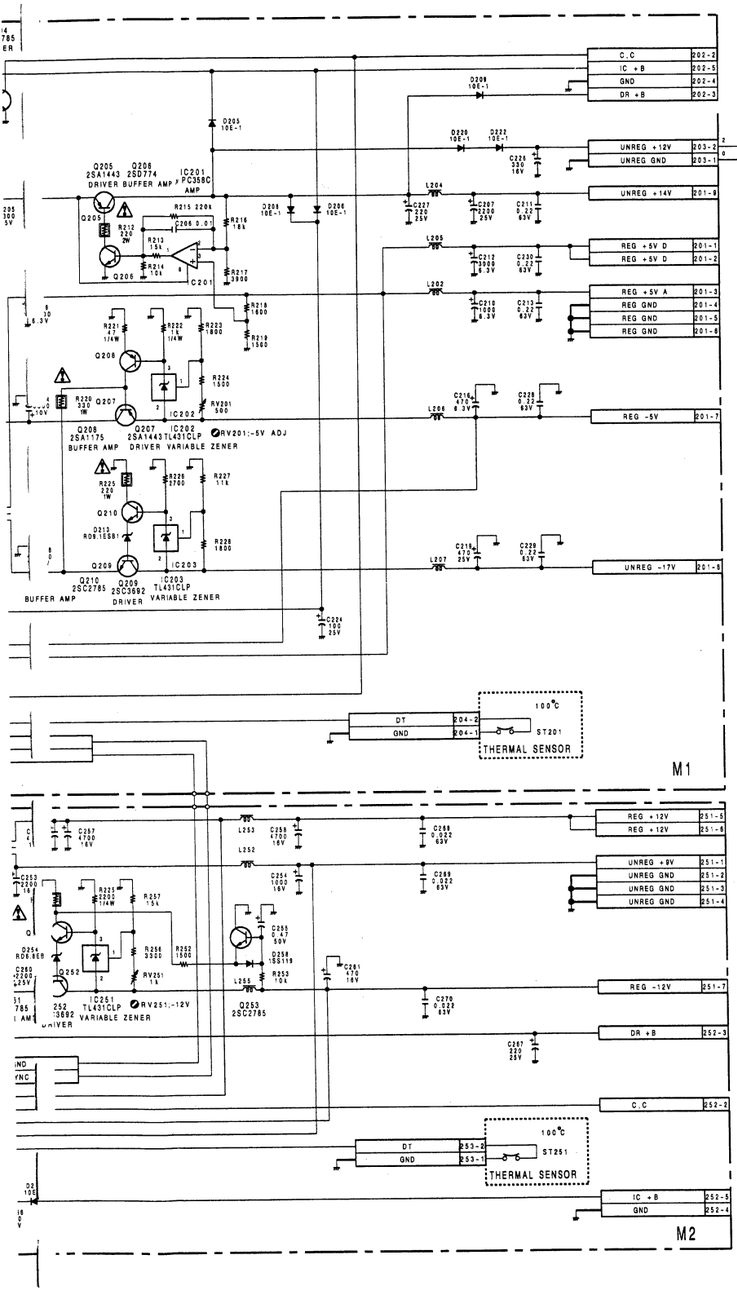

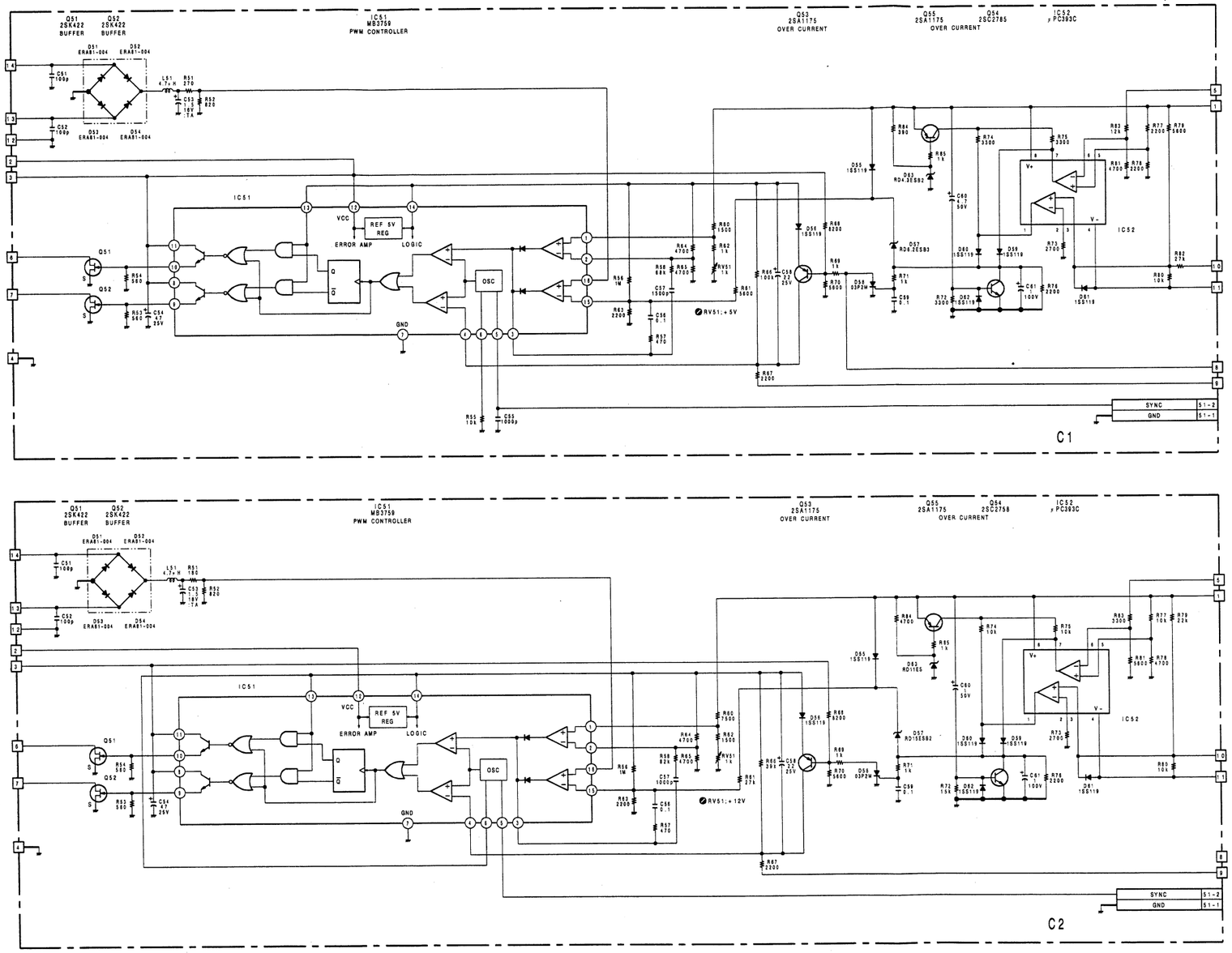

UR-21B BOARD

BOARD NO.1-628-132-12

BVW-85P(EK) ;#10001-

17-755

17-756

I J K L M N O

SOPS-1015; SWITCHING REGULATOR

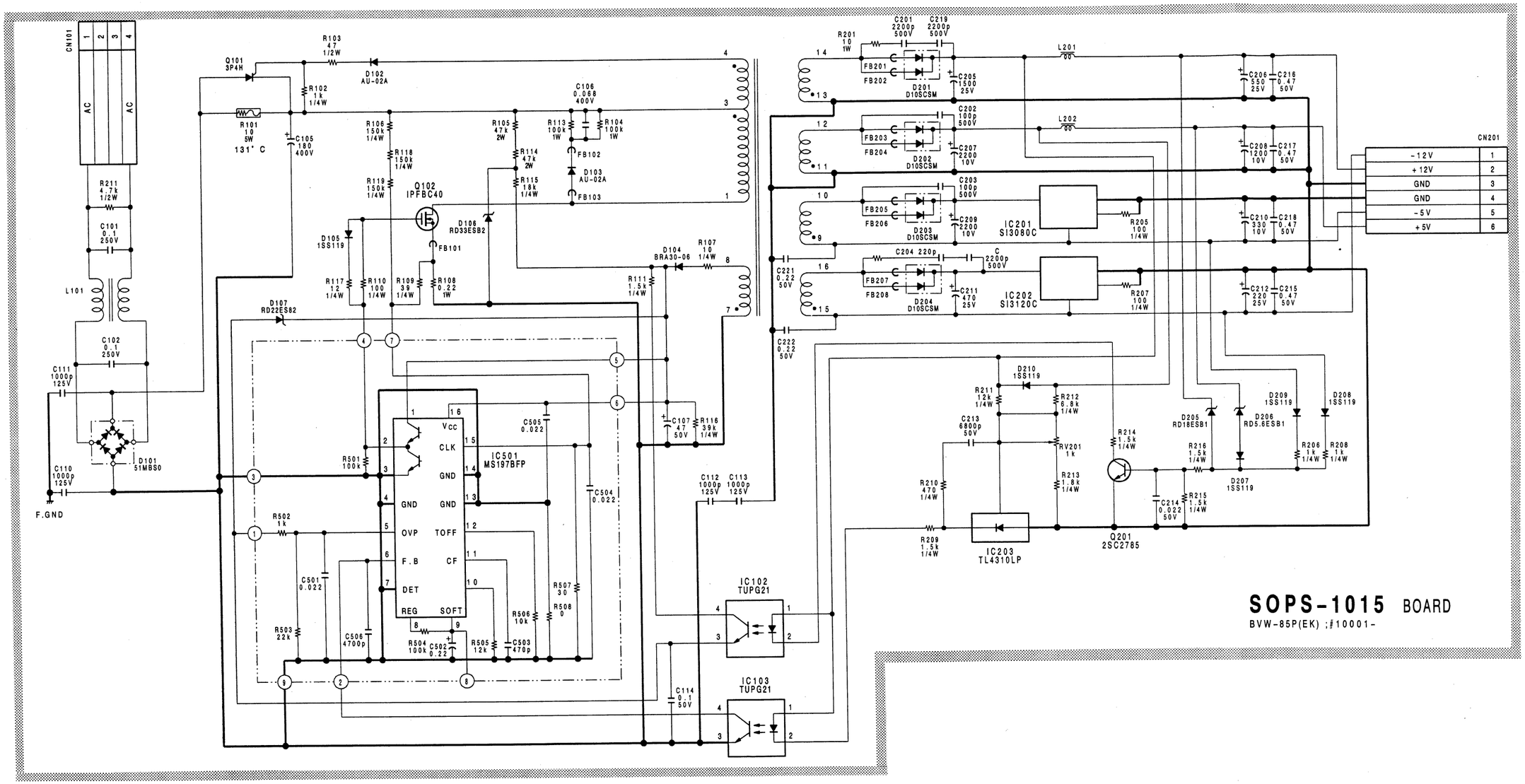

SOPS-1015 BOARD
BVW-85P(EK) ;#10001-

NOTE:

The shaded and ⚠ -marked components are critical to safety.
Replace only with same components as specified.

17-761 17-762

A B C D E F G H

1 2 3 4 5

MB-331(1/4); MOTHER BOARD

TBC-9PC

CN101

A		B		
	GND	1	GND	
+12V	REG +12V IN	2	REG +12V IN	+12V
+5V	REG +5V IN	3	REG +5V IN	+5V
+9V	UNREG +9V IN	4	UNREG +9V IN	+9V
	GND	5	REF VIDEO IN(X)	137-1A
	GND	6	DUB REF VIDEO IN(X)	137-2A
	GND	7	GND	
212-30	SV 1 IN	8	SV 2 IN	212-31
212-33	H;ADVANCE OFF IN	9	L;TBC CONFI MODE IN	107-22C,212-34,111-5B
212-38	H;SV REF HOLD IN	10	——	
	GND	11	GND	
	GND	12	REF VIDEO OUT(X)	140-1
	GND	13	DUB REF VIDEO OUT(X)	137-3A
	GND	14	GND	
207-10A,212-22	SV SYNC OUT	15	H;EXT SYNC DET OUT	211-41
107-23B	L;CSDL IN	16	REF FIRST FIELD OUT	102-16B,211-34
106-11C	SV VD OUT	17	L;C BLK OUT	102-18B
103-16C	VD SYNC OUT	18	L;Y BLK OUT	103-16B
102-19A	REF SC OUT(G)	19	REF SC OUT(X)	102-19B
211-20,102-17A	REF HD OUT	20	LALT OUT	102-20B
106-11B	REF FH OUT	21	REF VD OUT	106-11A,102-16A 212-13
106-10A	REF O/E OUT	22	REF N/I OUT	106-10B
106-13A	HD	23	L;Y CLAMP INH IN	106-9B
	1/2 BLK OUT(TEST)	24	H;IN PHASE IN	106-14A
106-8C	L;V DL OUT	25	H;J MODEL OUT	106-12C
106-12B	1/2H BLK OUT	26	ZERO CK(+)OUT	106-8A
106-8A	R CK(+)OUT	27	1/2 R CK(+)OUT	106-6B
106-7A	R CK(-)OUT	28	1/2 R CK(-)OUT	106-7B
	GND	29	SYNC PHASE CONTROL IN	123-13
-5V	REG -5V IN	30	REG -5V IN	-5V
-12V	REG -12V IN	31	REG -12V IN	-12V
	GND	32	GND	

C		
	GND	1
+12V	REG +12V IN	2
+5V	REG +5V IN	3
+9V	UNREG +9V IN	4
137-1B	REF VIDEO IN(G)	5
137-2B	DUB REF VIDEO IN(G)	6
	GND	7
212-32	L;REC IN	8
211-44	L;PLAYER BVW-10 OUT	9
	——	10
	GND	11
140-2	REF VIDEO OUT(G)	12
137-3B	DUB REF VIDEO OUT(G)	13
	GND	14
CP-153,482-5	PCM REF SYNC OUT(X)	15
102-16C	COLOR FRAME PULSE OUT	16
107-23A	L;DO INH IN	17
102-18C	BF OUT	18
102-19C	REF SC OUT(G)	19
103-16A	Y CLAMP OUT	20
102-21C	C CLAMP OUT	21
106-10C	REF FIELD O/E OUT	22
106-9C	L;C CLAMP INH IN	23
106-12A	H;CHROMA MUTE	24
106-9A	C READ ZERO OUT	25
106-8B	ZERO CK(-)OUT	26
106-8C	H CK(+)OUT	27
106-7C	H CK(-)OUT	28
	GND	29
-5V	REG -5V IN	30
-12V	REG -12V IN	31
	GND	32

EN-48P

CN102

A		B		
	GND	1	GND	
+12V	REG +12V IN	2	REG +12V IN	+12V
+5V	REG +5V IN	3	REG +5V IN	+5V
+9V	UNREG +9V IN	4	UNREG +9V IN	+9V
	GND	5	GND	
137-4A	DUB B-Y/C DO OUT(X)	6	DUB B-Y/C DO OUT(G)	137-4B
	GND	7	DUB R-Y/Y DO OUT(G)	137-5B
139-3	CAV B-Y OUT(X)	8	CAV B-Y OUT(G)	139-4
	GND	9	CAV R-Y OUT(G)	139-2
	GND	10	GND	
107-27B	TBC'D B-Y IN(X)	11	TBC'D B-Y IN(G)	107-27C
	GND	12	TBC'D R-Y IN(G)	107-28C
	GND	13	GND	
103-14A	CHROMA OUT(G)	14	CHROMA OUT(X)	103-14B
	GND	15	GND	
101-21B,106-11A,212-13	REF VD IN	16	REF FIRST FIELD IN	101-16B,211-34
101-20A,211-20	REF HD IN	17	GND	
	——	18	L;C BLK IN	101-17B
101-19A	REF SC IN(G)	19	REF SC IN(X)	101-19B
	——	20	LALT IN	101-20B
130-1	SCH OUT	21	GND	
106-13C	L;C OFF IN	22	L;ID BLK IN	106-13B
111-25C,107-19B	L;C DROPOUT IN(X)	23	GND	
	GND	24	——	
107-10C,109-10C	L;VISC DET IN	25	——	
109-2C,107-2C	L;NO SIG IN	26	H;CHROMA MUTE IN	211-25,111-27A ,106-12A
	——	27	——	
123-11	SC PHASE CONTROL IN	28	GND	
	GND	29	GND	
-5V	REG -5V IN	30	REG -5V IN	-5V
-12V	REG -12V IN	31	REG -12V IN	-12V
	GND	32	GND	

C		
	GND	1
+12V	REG +12V IN	2
+5V	REG +5V IN	3
+9V	UNREG +9V IN	4
	GND	5
	GND	6
137-5A	DUB R-Y/Y DO OUT(X)	7
	GND	8
139-1	CAV R-Y OUT(X)	9
	GND	10
	GND	11
107-28B	TBC'D R-Y IN(X)	12
	GND	13
103-14C	CHROMA OUT(G)	14
136-2,111-3A	L;CTDM IN	15
101-16C	COLOR FRAME PULSE IN	16
211-28,111-9A,106-5A	H;NORMAL FWD IN	17
101-18C	BF IN	18
101-19C	REF SC IN(G)	19
138-28C,212-46,107-23C	L;H SHIFT INH IN	20
101-21C	C CLAMP IN	21
211-35	VIDEO OUT 1ST FIELD OUT	22
212-17,111-5C,106-15A	L;Y DROPOUT IN(X)	23
	——	24
103-24A	APC SC OUT	25
107-10A	H;SC BLK IN	26
103-26A	REGEN SC OUT	27
123-15	HUE CONTROL IN	28
	GND	29
-5V	REG -5V IN	30
-12V	REG -12V IN	31
	GND	32

VO-18P

CN103

A		B		
	GND	1	GND	
+12V	REG +12V IN	2	REG +12V IN	+12V
+5V	REG +5V IN	3	REG +5V IN	+5V
+9V	UNREG +9V IN	4	UNREG +9V IN	+9V
	GND	5	GND	
111-3C	COMPONENT Y OUT(X)	6	COMPONENT Y OUT(G)	111-3B
	GND	7	CAV Y OUT(G)	138-2
126-1	VIDEO OUT 1(X)	8	VIDEO OUT 1(G)	126-2
	GND	9	VIDEO OUT 2(G)	126-4
126-5	VIDEO OUT 3(X)	10	VIDEO OUT 3(G)	126-6
	GND	11	TV VIDEO OUT(G)	137-5B
136-4,105-10C	VIDEO LINE IN(X)	12	VIDEO LINE IN(G)	136-3,105-10A
	GND	13	TBC'D Y IN(G)	107-25C
102-14A	CHROMA IN(G)	14	CHROMA IN(X)	102-14B
123-19	SET UP CONTROL IN	15	H;VIDEO REC/EE(MOD) IN	104-16C,202-27A,205-21A,112-12C,208-21B,215-9A
101-20C	Y CLAMP IN	16	L;Y BLK IN	101-18B
211-22	CHARACTER GATE IN	17	CHARACTER SIGNAL IN(X)	211-21
	GND	18	GND	
	——	19	C RF CH-A IN(G)	111-17B
	——	20	C RF CH-B IN(G)	111-21B
	GND	21	GND	
	——	22	C RF CH-A AGC OUT(G)	202-17B
	——	23	C RF CH-B AGC OUT(G)	202-15B
102-25C	APC SC IN	24	GND	
	GND	25	GND	
102-27C	REGEN SC IN	26	——	
	——	27	C SWITCHING PULSE IN(G)	
	——	28	L;VISC INS IN	107-10B
	——	29	DOC RF OUT(G)	
-5V	REG -5V IN	30	REG -5V IN	-5V
-12V	REG -12V IN	31	REG -12V IN	-12V
	GND	32	GND	

C		
	GND	1
+12V	REG +12V IN	2
+5V	REG +5V IN	3
+9V	UNREG +9V IN	4
	GND	5
	GND	6
138-1	CAV Y OUT(X)	7
	GND	8
126-3	VIDEO OUT 2(X)	9
	GND	10
137-6A	TV VIDEO OUT(X)	11
109-15C,137-15C,212-47	L;VISC EXIST IN	12
107-25B	TBC'D Y IN(X)	13
102-14C	CHROMA IN(G)	14
212-36	H;TBC BYPASS ON IN	15
101-18A	VO SYNC IN	16
	CHARACTER SIGNAL IN(G)	17
	GND	18
111-17C	C RF CH-A IN(X)	19
111-21C	C RF CH-B IN(X)	20
	GND	21
202-17C	C RF CH-A AGC OUT(X)	22
202-15C	C RF CH-B AGC OUT(X)	23
202-24C	H;SQUELCH CONT OUT	24
	GND	25
108-13C	SCH TRACKING OUT	26
111-13C,207-19B,232-28C	C SWITCHING PULSE IN(X)	27
212-46,107-23C,102-20C	L;H SHIFT INH IN	28
202-29C	DOC RF OUT(X)	29
-5V	REG -5V IN	30
-12V	REG -12V IN	31
	GND	32

A		
	GND	1
+12V	REG +12V IN	2
+5V	REG +5V IN	3
+9V	UNREG +9V IN	4
	C REC RF OU	5
120-1	C REC RF OU	6
120-2	C REC RF OU	7
111-24B	CHROMA EE O	8
	GND	9
	——	10
	GND	11
113-12A	C SYNC IN(G)	12
	C DROPOUT II	13
113-25A	DEC R-Y/B-Y	14
	——	15
	——	16
	——	17
113-27A	DEC Y IN(G)	18
	Y DROP OUT	19
113-11A	Y SYNC IN(G)	20
	GND	21
	VITC IN(G)	22
	GND	23
	L;V BLK IN(G	24
	GND	25
110-16B	Y EE OUT(G)	26
	Y REC RF OUT	27
121-5	Y REC RF OU	28
121-6	Y REC RF OU	29
-5V	REG -5V IN	30
-12V	REG -12V IN	31
	GND	32

C		
	GND	1
+12V	REG +12V IN	2
+5V	REG +5V IN	3
+9V	UNREG +9V IN	4
	C REC RF OUT	5
	C REC RF OUT	6
	C REC RF OUT	7
111-24C	CHROMA EE OU	8
	GND	9
108-14B	L;MD REF BLK	10
	GND	11
113-12C	C SYNC IN(X)	12
112-15A	C DROP OUT I	13
113-25C	DEC R-Y/B-Y	14
109-20C,215-9B,204-28B,205-14A,208-20C,203-28A	L;METAL/H;OX	15
215-9A,208-21B,112-12C,103-15B,205-21A,202-27A	H;VODEO REC/	16
237-10A,130-2,211-46,112-13C	L;CTDM IN	17
113-27C	DEC Y IN(X)	18
112-14A	Y DROPOUT IN	19
212-21,207-9C,113-11C	Y SYNC IN(X)	20
	GND	21
212-27	VITC IN(X)	22
	GND	23
113-14C	L;V BLK IN(X	24
	GND	25
110-16C	Y EE OUT(X)	26
	Y REC RF OUT	27
	Y REC RF OUT	28
	Y REC RF OUT	29
-5V	REG -5V IN	30
-12V	REG -12V IN	31
	GND	32

CN114

1	YA DT VIDEO RF(X)	110-6C
2	YA DT VIDEO RF(G)	110-6B
3	——	——
RP-46,953-1		
RP-46,953-2		

CN115

1	——	——
2	YB DT VIDEO RF(X)	110-10C
3	YB DT VIDEO RF(G)	110-10B
RP-46,953-3		
RP-46,953-4		

CN116

1	——	——
2	CA DT VIDEO RF(G)	111-15B
3	CA DT VIDEO RF(X)	111-15C
RP-46,963-2		
RP-46,963-1		

CN117

1	——	——
2	CB DT VIDEO RF(X)	111-19C
3	CB DT VIDEO RF(G)	111-19B
RP-46,963-3		
RP-46,963-4		

CN118

1	C RP RF CH-A RF IN(X)	110-7C
2	Y RP RF CH-A RF IN(G)	110-7B
3	——	——
RP-46,913-1		
RP-46,913-2		

CN119

1	C RP RF CH-A IN(G)	111-16B
2	C RP RF CH-A IN(X)	111-16C
3	——	——
RP-46,933-2		
RP-46,933-1		

CN120

1	C REC RF OUT (X)	104-6A
2	C REC RF OUT (G)	104-7A
3	L;METALH;OXIDE OUT	104-15C,111-11C,121-4,113-6C,202-27C,203-28A,204-28B,205-14A,208-20C,211-28,215-9B,109-20C
4	REG +12V OUT	+12V
5	GND	
6	REG -5V OUT	-5V
RP-46,931-1		
RP-46,931-2		
RP-46,931-3		
NC		
NC		
NC		

CN121

1	REG -5V OUT	-5V
2	GND	
3	REG +12V OUT	+12V
4	L;METALH;OXIDE OUT	104-15C,111-11C,113-6C,109-3,202-27C,203-28A,204-28B,205-14A,208-20C,211-28,215-9B,109-20C
5	Y REC RF OUT(X)	104-25A
6	Y REC RF OUT(G)	104-23A
NC		
NC		
NC		
RP-46,911-3		
RP-46,911-1		
RP-46,911-2		

CN122

1	CAV Y IN(G)	113-23A
2	CAV Y IN(X)	113-23C
CN PANEL,025-G		
CN PANEL,025-X		

CN123

1	——	——
2	——	——
3	——	——
4	L;CAPSTAN LOCK 4F IN	212-8
5	L;CAPSTAN LOCK 2/4F IN	212-9
6	L;CAPSTAN LOCK 2F IN	212-10
7	L;REC INHIBIT IN	212-7
8	AUDIO SYSTEM;H:PCM/IN	123-8
9	L;TBC BYPASS OFF IN	211-43
10	SC PHASE CONTROL(EXTOUT	123-1
CP-103P,501-1		
CP-103P,501-2		
CP-103P,501-3		
CP-103P,501-4		
CP-103P,501-5		
CP-103P,501-6		
CP-103P,501-7		
CP-103P,501-8		
CP-103P,501-9		
CP-103P,501-10		

MB-331(1/4)

MD-46P

CN104

	A		B	
+12V	GND	1	GND	
+12V	REG +12V IN	2	REG +12V IN	+12V
+5V	REG +5V IN	3	REG +5V IN	+5V
+9V	UNREG +9V IN	4	UNREG +9V IN	+9V
120-1	C REC RF OUT(G)	5	C REC RF OUT(G)	
120-2	C REC RF OUT(X)	6	C REC RF OUT(X)	
111-24B	C REC RF OUT(G)	7	C REC RF OUT(G)	
	CHROMA EE OUT(G)	8	——	
	GND	9	GND	
	——	10	——	
	GND	11	GND	
113-12A	C SYNC IN(G)	12	——	
	C DROPOUT IN(G)	13	——	
113-25A	DEC R-Y/B-Y IN(G)	14	——	
	——	15	——	
	——	16	——	
	——	17	——	
113-27A	DEC Y IN(G)	18	——	
	Y DROP OUT IN(G)	19	——	
113-11A	Y SYNC IN(G)	20	——	
	GND	21	GND	
	VITC IN(G)	22	——	
	GND	23	GND	
	L;V BLK IN(G)	24	——	
	GND	25	GND	
110-16B	Y EE OUT(G)	26	——	
	Y REC RF OUT(G)	27	Y REC RF OUT(G)	
121-5	Y REC RF OUT(X)	28	Y REC RF OUT(X)	
121-6	Y REC RF OUT(G)	29	Y REC RF OUT(G)	
-5V	REG -5V IN	30	REG -5V IN	-5V
-12V	REG -12V IN	31	REG -12V IN	-12V
	GND	32	GND	

C

	GND	1
+12V	REG +12V IN	2
+5V	REG +5V IN	3
+9V	UNREG +9V IN	4
	C REC RF OUT(G)	5
	C REC RF OUT(X)	6
	C REC RF OUT(G)	7
111-24C	CHROMA EE OUT(X)	8
	GND	9
108-14B	L;MD REF BLK OUT	10
	GND	11
	C SYNC IN(X)	12
	C DROP OUT IN(X)	13
	DEC R-Y/B-Y IN(X)	14
C,21(121-4,120-3,111-11C	L;METAL/H;OXIDE IN	15
2C,1(5B,205-21A,202-27A	H;VODEO REC/EE(MOD) IN	16
130- 11-46,112-13C	L;CTDM IN	17
	DEC Y IN(X)	18
	Y DROPOUT IN(X)	19
7-9C,113-11C	Y SYNC IN(X)	20
	GND	21
212-27	VITC IN(X)	22
	GND	23
113-14C	L;V BLK IN(X)	24
	GND	25
110-16C	Y EE OUT(X)	26
	Y REC RF OUT(G)	27
	Y REC RF OUT(X)	28
	Y REC RF OUT(G)	29
-5V	REG -5V IN	30
-12V	REG -12V IN	31
	GND	32

DEC-46P

CN105

	A		B	
+12V	GND	1	GND	
+12V	REG +12V IN	2	REG +12V IN	+12V
+5V	REG +5V IN	3	REG +5V IN	+5V
+9V	UNREG +9V IN	4	UNREG +9V IN	+9V
	——	5	——	
	——	6	——	
	——	7	——	
	——	8	——	
	——	9	——	
136-3,103-12B	VIDEO LINE IN(G)	10	——	
	——	11	——	
	——	12	——	
	——	13	——	
	——	14	——	
	——	15	——	
111-22C,107-24A	EDGE GND	16	EDGE N OUT	111-22B,107-22B
	——	17	——	
	——	18	——	
	——	19	——	
	——	20	——	
	——	21	——	
112-10A	LINE CHROMA OUT(G)	22	——	
	——	23	——	
	——	24	——	
113-19A	LINE Y OUT(G)	25	——	
	——	26	——	
	——	27	SUB DEMOD Y IN(G)	114-4B
	——	28	——	
112-11A	1H CHROMA OUT(G)	29	——	
-5V	REG -5V IN	30	REG -5V IN	-5V
-12V	REG -12V IN	31	REG -12V IN	-12V
	GND	32	GND	

C

	GND	1
+12V	REG +12V IN	2
+5V	REG +5V IN	3
+9V	UNREG +9V IN	4
	——	5
	——	6
	——	7
	——	8
	——	9
136-4,103-12A	VIDEO LINE IN(X)	10
	——	11
130-3	L;AGC/H;MANUAL IN	12
130-4	VIDEO LEVEL CONTROL IN	13
	——	14
	——	15
111-22A,107-22A	EDGE P OUT	16
	——	17
113-1C	COMB OFF IN	18
	——	19
	——	20
	——	21
112-10C	LINE CHROMA OUT(X)	22
	——	23
	——	24
113-19C	LINE Y OUT(X)	25
	——	26
111-4C	SUB DEMOD Y IN(X)	27
	——	28
112-11C	1H CHROMA OUT(X)	29
-5V	REG -5V IN	30
-12V	REG -12V IN	31
	GND	32

TBC-12PC

CN106

	A		B	
	GND	1	GND	
+12V	REG +12V IN	2	REG +12V IN	+12V
+5V	REG +5V IN	3	REG +5V IN	+5V
+9V	UNREG +9V IN	4	UNREG +9V IN	+9V
102-17C,211-28,111-9A	H;NORMAL FWD IN	5	——	
101-27A	R CK(+)IN	6	1/2 R CK(+)IN	101-27B
101-28A	R CK(-)IN	7	1/2 R CK(-)IN	101-28B
101-26B	ZERO CK(+)IN	8	ZERO CK(-)IN	101-26C
101-25C	C READ ZERO IN	9	L;Y CLAMP INH OUT	101-23B
101-22A	REF ODD/EVEN IN	10	REF N/I IN	101-22B
102-16A,212-13,101-21B	REF VD IN	11	REF FH IN	101-21A
101-24C,211-25,102-26B,111-27A	H;CHROMA MUTE	12	1/2 H BLK IN	101-26A
101-23A	HD	13	L;ID BLK OUT	102-22B
101-24B	H;INPHASE OUT	14	DT V IN	210-12A,212-42
212-17,102-23C,111-5C	L;Y DROPOUT IN	15	H;VIDEO EE(DEMOD)IN	205-21B,111-9C
108-16A	Y WRITE ZERO IN	16	GND	108-16B

C

	GND	1
+12V	REG +12V IN	2
+5V	REG +5V IN	3
+9V	UNREG +9V IN	4
	——	5
101-27C	H CK(+)IN	6
101-28C	H CK(-)IN	7
101-25A	L;V DL IN	8
101-23C	L;C CLAMP INH OUT	9
101-22C	REF FIELD O/E IN	10
101-17A	SV VD IN	11
101-25B	H;J MODEL IN	12
102-22A	L;C OFF OUT	13
209-16A	V SELECT IN	14
209-16C	SKIP IN	15
111-6B,108-16C	BID LEVEL OUT	16

CN107

	A		B	
109-1A,110-15C	Y GATED H OUT	1	Y PB SYNC IN	109-1B
210-11A,109-2A	L;Y SDO OUT	2	TBC SWITCHING PULSE IN	207-16C
111-8B,109-3A	L;F BID OUT	3	L;Y DGB OUT	109-3B
109-4A	DATA(G)	4	DATA(G)	109-4B
109-5A	Y WRITE CK IN	5	GND	109-5B
109-6A	Y-AD DATA 2^7 IN	6	GND	109-6B
109-7A	Y-AD DATA 2^6 IN	7	GND	109-7B
109-8A	Y-AD DATA 2^5 IN	8	GND	109-8B
109-9A	Y-AD DATA 2^4 IN	9	GND	109-9B
102-26C	H;SC BLK OUT	10	L;VISC INS OUT	103-28B
109-11A	C-AD DATA 2^7 IN	11	GND	109-11B
109-12A	C-AD DATA 2^6 IN	12	GND	109-12B
109-13A	C-AD DATA 2^5 IN	13	GND	109-13B
109-14A	C-AD DATA 2^4 IN	14	GND	109-14B
109-15A	C WRITE CK IN	15	GND	109-15B
109-16A	DATA(G)	16	DATA(G)	109-16B
210-11B,109-17A	L;C SDO OUT	17	L;C DGB OUT	109-17B
210-13A,109-18A	C GATED H OUT	18	C PB SYNC IN	109-18B
109-19A	C WRITE ZERO IN	19	L;C DROPOUT(X)IN	102-23A,111-25C
211-36	PB B-Y FP1 OUT	20	PB B-Y FP2 OUT	211-37
212-37	H;COMB FILTER OFF IN	21	DL PB V OUT	212-40
111-22A,105-16C	EDGE-F IN	22	EDGE-N IN	111-22B,105-16B
101-17C	L;DO INH OUT	23	L;CS DL OUT	101-16A
105-16A,111-22C	EDGE GND	24	GND	
	TBC'D Y OUT(G)	25	TBC'D Y OUT(X)	103-13C
	GND	26	GND	
	TBC'D B-Y OUT(G)	27	TBC'D B-Y OUT(X)	102-11A
	TBC'D R-Y OUT(G)	28	TBC'D R-Y OUT(X)	102-12C
123-21	CHROMA LEVEL CONTROL IN	29	GND	
-5V	REG -5V IN	30	REG -5V IN	-5V
-12V	REG -12V IN	31	REG -12V IN	-12V
	GND	32	GND	

C

212-14,210-13B,109-1C	Y COUNT H IN	1
102-26A,109-2C	L;NO SIG OUT	2
109-3C	GRY SWITCH CONTROL OUT	3
109-4C	DATA(G)	4
109-5C	VISC IN	5
109-6C	Y-AD DATA 2^8 IN	6
109-7C	Y-AD DATA 2^4 IN	7
109-8C	Y-AD DATA 2^2 IN	8
109-9C	Y-AD DATA 2^0 IN	9
102-25A,109-10C	L;VISC DET OUT	10
109-11C	C-AD DATA 2^8 IN	11
109-12C	C-AD DATA 2^4 IN	12
109-13C	C-AD DATA 2^2 IN	13
109-14C	C-AD DATA 2^0 IN	14
109-15C,212-47,103-12C	L;VISC EXIST OUT	15
109-16C	DATA(G)	16
109-17C	L;C W CLAMP INH OUT	17
212-15C,109-18C	C COUNT H IN	18
212-41	DIGITAL DEC CHECK OUT	19
211-33,101-24B	H;IN PHASE IN	20
211-29,109-20B	L;NOISELESS PB IN	21
111-5B,212-34,101-9B	L;TBC CONFI MODE IN	22
212-46,102-20C,103-28C	L;H SHIFT INH IN	23
	GND	24
103-13B	TBC'D Y OUT(G)	25
	GND	26
102-11B	TBC'D B-Y OUT(G)	27
102-12B	TBC'D R-Y OUT(G)	28
123-23	VIDEO LEVEL CONTROL IN	29
-5V	REG -5V IN	30
-12V	REG -12V IN	31
	GND	32

CN123

CP-103P,501-1	1	L;CAPSTAN LOCK 4F IN	212-8
CP-103P,501-2	2		
CP-103P,501-3	3		
CP-103P,501-4	4	L;CAPSTAN LOCK 2/4F IN	212-9
CP-103P,501-5	5	L;CAPSTAN LOCK 2F IN	212-10
CP-103P,501-6	6	L;REC INHIBIT IN	212-7
CP-103P,501-7	7	AUDIO SYSTEM(H;PCM)IN	123-8
CP-103P,501-8	8	L;TBC BYPASS OFF IN	211-43
CP-103P,501-9	9	SC PHASE CONTROL(EXT)OUT	124-1
CP-103P,501-10	10	SC PHASE CONTROL IN	102-28A
CP-103P,501-11	11	SC PHASE CONTROL(EXT)OUT	124-2
CP-103P,501-12	12	SYNC PHASE CONTROL IN	101-29B
CP-103P,501-13	13	HUE CONTROL(EXT)OUT	124-3
CP-103P,501-14	14	HUE CONTROL IN	102-26C
CP-103P,501-15	15	Y/C DELAY CONTROL(EXT)OUT	124-9
CP-103P,501-16	16	Y/C DELAY CONTROL IN	109-19C
CP-103P,501-17	17	SET UP CONTROL(EXT)OUT	124-4
CP-103P,501-18	18	SET UP CONTROL IN	103-15A
CP-103P,501-19	19	CHROMA CONTROL(EXT)OUT	124-5
CP-103P,501-20	20	CHROMA LEVEL CONTROL IN	107-29A
CP-103P,501-21	21	VIDEO CONTROL(EXT)OUT	124-6
CP-103P,501-22	22	VIDEO LEVEL CONTROL IN	107-28C
CP-103P,501-23	23	L;AUDIO NR IN	211-10
CP-103P,501-24	24	H;AUTO STEREO OUT	212-43,225-6A,233-1
CP-103P,501-25	25	L;MONO/H;STEREO IN	237-9A,7B
CP-103P,501-26	26	L;2CH/H;4CH IN	132-1
CP-103P,501-27	27	REG +5V OUT	+5V
CP-103P,501-28	28	GND	
CP-103P,501-29	29	REG -5V OUT	-5V
CP-103P,501-30	30		

CN124

RM-57,451-10	1	SC PHASE CONTROL(EXT)IN	123-10
RM-57,451-12	2	SYNC PHASE CONTROL(EXT)IN	123-12
RM-57,451-11	3	HUE CONTROL(EXT)IN	123-14
RM-57,451-8	4	SET UP CONTROL(EXT)IN	123-18
RM-57,451-7	5	CHROMA CONTROL(EXT)IN	123-20
RM-57,451-9	6	VIDEO CONTROL(EXT)IN	123-22
RM-57,451-5	7	REG +12V OUT	+12V
RM-57,451-4	8	Y/C DELAY CONTROL(EXT)IN	123-16
RM-57,451-6	9	REG -12V OUT	-12V
	10		

CN138

CN PANEL,029-X	1	103-7C
CN PANEL,029-G	2	103-7B

CN139

CN PANEL,030-X	1	102-9C
CN PANEL,030-G	2	102-9B
CN PANEL,031-X	3	102-8A
CN PANEL,031-G	4	102-8B

CN125

CN PANEL,025-2	1A	113-21A
CN PANEL,025-8	2A	113-17A
CN PANEL,019-2	3A	111-28B
CN PANEL,019-8	4A	111-28B
CN PANEL,025-1	1B	113-21C
CN PANEL,025-7	2B	113-17C
CN PANEL,018-1	3B	111-2C
CN PANEL,018-7	4B	111-26C

CN128

CN PANEL,015-X	1	103-8A
CN PANEL,015-G	2	103-8B
CN PANEL,016-X	3	103-9C
CN PANEL,016-G	4	103-9B
CN PANEL,017-X	5	103-10A
CN PANEL,017-G	6	103-10B

CN127

CN PANEL,028-X	1	112-8C
CN PANEL,028-G	2	112-8A
CN PANEL,027-X	3	112-9C
CN PANEL,027-G	4	112-9A

CN126

CN PANEL,025-5	1	112-6C
CN PANEL,025-6	2	112-6A
CN PANEL,025-3	3	112-7C
CN PANEL,025-4	4	112-7A

MB-331(1/4)

MB-331 BOARD (1/4)

BOARD NO.1-635-561-11,12

BVW-85P(EK) ;#10001-

MB-331(2/4); MOTHER BOARD

TBC-7D

CN108

	A		B	
+12V	GND	1	GND	
+12V	REG +12V IN	2	REG +12V IN	+12V
+5V	REG +5V IN	3	REG +5V IN	+5V
+9V	UNREG +9V IN	4	UNREG +9V IN	+9V
	GND	5	GND	
	GND	6	GND	
	GND	7	GND	
111-1B	DEMOD Y IN(G)	8	DEMOD Y IN(X)	111-1C
	GND	9	GND	
	GND	10	Y-IMPACT ERROR OUT(X)	131-1
	GND	11	GND	
	GND	12	Y-IMPACT ERROR IN(X)	131-3
206-22A	ANALOG TAPE SPEED IN	13	H;FAST SPEED DET IN	206-10B,111-7B
111-11B,211-23	H;F.FWD MODE IN	14	L;MD REF BLK IN	104-10C
	GND	15	GND	
206-16A	Y WRITE ZERO OUT	16	GND	206-16B

C

	GND	1
+12V	REG +12V IN	2
+5V	REG +5V IN	3
+9V	UNREG +9V IN	4
	GND	5
	GND	6
	GND	7
111-2A	DEMOD Y IN(G)	8
	GND	9
131-2	Y-IMPACT ERROR OUT(G)	10
	GND	11
131-4	Y-IMPACT ERROR IN(G)	12
103-26C	SCH TRACKING IN	13
111-10B,211-24	H;REW MODE IN	14
	GND	15
111-8B,106-16C	BID LEVEL IN	16

CN109

	A		B	
101-15C,107-1A	Y GATED H IN	1	Y PB SYNC OUT	107-1B
210-11A,107-2A	L;Y SDO IN	2	TAPE DIRECTION IN	206-16A,111-7A,211-8
111-8B,107-3A	L;F BID	3	L;Y DGB IN	107-3B
107-4A	DATA(G)	4	DATA(G)	107-4B
107-5A	Y WRITE CK OUT	5	GND	107-5B
107-6A	Y-AD DATA 2^7OUT	6	GND	107-6B
107-7A	Y-AD DATA 2^3OUT	7	GND	107-7B
107-8A	Y-AD DATA 2^3OUT	8	GND	107-8B
107-9A	Y-AD DATA 2^1OUT	9	GND	107-9B
212-39	L;Y IMPACT ERROR INH OUT	10	L;C IMPACT ERROR INH OUT	212-48
107-11A	C-AD DATA 2^7OUT	11	GND	107-11B
107-12A	C-AD DATA 2^3OUT	12	GND	107-12B
107-13A	C-AD DATA 2^3OUT	13	GND	107-13B
107-14A	C-AD DATA 2^1OUT	14	GND	107-14B
107-15A	C WRITE CK OUT	15	GND	107-15B
107-16A	DATA(G)	16	DATA(G)	107-16B
210-11B,107-17A	L;C SDO IN	17	L;C DGB IN	107-17B
210-13A,107-18A	C GATED H IN	18	C PB SYNC OUT	107-18B
107-19A	C WRITE ZERO OUT	19	GND	
111-26A	PURE Y IN	20	L;NOISELESS PB IN	107-21C,211-29
	GND	21	GND	
	GND	22	C-IMPACT ERROR OUT(X)	131-5
	GND	23	GND	
	GND	24	C-IMPACT ERROR IN(X)	131-7
	GND	25	GND	
111-27B	DEMOD C IN(G)	26	DEMOD C IN(X)	111-27C
	GND	27	GND	
	GND	28	GND	
	GND	29	GND	
-5V	REG -5V IN	30	REG -5V IN	-5V
-12V	REG -12V IN	31	REG -12V IN	-12V
	GND	32	GND	

C

212-14,210-13B,107-1C	Y COUNT H OUT	1
102-26A,107-2C	L;NO SIG IN	2
107-3C	GRY SWITCH CONTROL IN	3
107-4C	DATA(G)	4
107-5C	VISC OUT	5
107-6C	Y-AD DATA 2^6OUT	6
107-7C	Y-AD DATA 2^4OUT	7
107-8C	Y-AD DATA 2^2OUT	8
107-9C	Y-AD DATA 2^0OUT	9
102-25A,107-10C	L;VISC DET IN	10
107-10C	C-AD DATA 2^6OUT	11
107-11C	C-AD DATA 2^4OUT	12
107-12C	C-AD DATA 2^2OUT	13
107-13C	C-AD DATA 2^0OUT	14
212-47,107-15C	L;VISC EXIST IN	15
107-16C	DATA(G)	16
107-17C	L;C W CLAMP INH IN	17
212-15,107-18C	C COUNT H OUT	18
123-17	Y/C DELAY CONTROL IN	19
215-9B,204-28B,205-14A,208-20C,203-28A,202-27C,113-6C,211-26,121-4,120-3,104-15C,111-11C	L;METAL/H;OXIDE	20
	GND	21
131-6	C-IMPACT ERROR OUT(G)	22
	GND	23
131-8	C-IMPACT ERROR IN(G)	24
	GND	25
111-28A	DEMOD C IN(G)	26
	GND	27
	GND	28
	GND	29
-5V	REG -5V IN	30
-12V	REG -12V IN	31
	GND	32

DM-5

CN110

	A		B	
+12V	GND	1	GND	
+12V	REG +12V IN	2	REG +12V IN	+12V
+5V	REG +5V IN	3	REG +5V IN	+5V
+9V	UNREG +9V IN	4	UNREG +9V IN	+9V
	——	5	——	
	——	6	Y DT RF CH-A IN(G)	114-3
	——	7	Y RP RF CH-A IN(G)	118-2
	——	8	CH-A SYNC REF OUT(G)	210-21B
	——	9	——	
	——	10	Y DT RF CH-B IN(G)	115-3
	——	11	Y RP RF CH-B IN(G)	133-2
	——	12	CH-B SYNC REF OUT(G)	210-20B
	——	13	PCM CLAMP MUTE(G) IN	
	——	14	——	
	——	15	Y GATED H IN(G)	
	——	16	Y EE IN(G)	104-26A

C

	GND	1
+12V	REG +12V IN	2
+5V	REG +5V IN	3
+9V	UNREG +9V IN	4
DUS-345,5	Y PCM REJ.2 OUT	5
114-2	Y DT RF CH-A IN(X)	6
118-1	Y RP RF CH-A IN(X)	7
210-21A	CH-A SYNC REF OUT(X)	8
DUS-345,4	Y PCM REJ.1 OUT	9
115-2	Y DT RF CH-B IN(X)	10
133-1	Y RP RF CH-B IN(X)	11
210-20A	CH-B SYNC REF OUT(X)	12
DUS-345,1 207-14A	PCM CLAMP MUTE IN(X)	13
207-19A	Y SWITCHING PULSE IN	14
109-1A,107-1A	Y GATED H IN(X)	15
104-26C	Y EE IN(X)	16

212-16,207-6A
108-8C
136-2,102-15C
130-5
209-9A
211-8,109-2B,208-16A
112-16A
102-17C,105-5A,211-28
112-16C
105-16C,107-22A
211-25,102-28B
109-25C
-5V
-12V
108-8B
125-3B
103-6A
105-27C
207-29A,212-17,106-15A,102-23C
113-15C
DUS-345,6
211-27,129-4
205-21B,106-15B
205-14C
109-20C203-28A,202-27C,121-4,120-3,113-6C,104-15C,204-28B,205-14A,208-20C,211-26,215-9B
207-19B,202-28C,103-27C
116-3
119-2
103-19C
117-2
134-1
103-20C
105-16A,107-24A
104-8C
207-29B,107-19B,102-23A
109-26B
125-4B
-5V
-12V

CN128

	RE-34,631-1	REG +12V OUT
	RE-34,632-2	GND
	RE-34,632-3	REG -12V OUT
	RE-34,632-6	L;DT HEAD/H;RP HEAD OUT

CN129

	SW-144,512-9	SCH OUT
	SW-144,512-1	L;CTDM IN
	SW-144,512-7	L;AGC/H;MANUAL IN
	SW-144,512-8	VIDEO LEVEL CONTROL IN
	SW-144,512-3	VIDEO/RF METER OUT
	SW-144,512-2	L;Y-R.B IN
	SW-144,512-10	LINE SCH IND OUT
	SW-144,512-6	REG +12V OUT
	SW-144,512-5	GND
	SW-144,512-4	REG -12V OUT
	SW-144,511-3	H;MONI SEL CH1/3 IN
	SW-144,511-2	H;MONI SEL STEREO IN
	SW-144,511-1	H;MONI SEL CH2/4 IN

CN130

	102-21A	
	211-46,112-13C,104-17C,237-10A	
	105-12C	
	105-13C	
	111-5A	
	112-14C,211-47	
	113-2C	
+12V		
-12V		
	237-14A	
	237-14B	
	237-15A	

CN131

	MB-192,317-1	Y-IMPACT ERROR OUT(X)
	MB-192,317-2	Y-IMPACT ERROR OUT(G)
	MB-192,317-5	Y-IMPACT ERROR IN(X)
	MB-192,317-6	Y-IMPACT ERROR IN(G)
	MB-192,317-3	C-IMPACT ERROR OUT(X)
	MB-192,317-4	C-IMPACT ERROR OUT(G)
	MB-192,317-7	C-IMPACT ERROR IN(X)
	MB-192,317-8	C-IMPACT ERROR IN(G)

	108-10B
	108-10C
	108-12B
	108-12C
	109-23B
	109-23C
	109-24B
	109-24C

CN132

	BF-28,533-4	L;2CH/H;4CH OUT
	BF-28,533-1	REG +12V OUT
	BF-28,533-5	REG +5V OUT
	BF-28,533-3	GND
	BF-28,533-2	REG -12V OUT

	123-27
+12V	
+5V	
-12V	

CN133

	RP-46,923-1	Y RP RF CH-B IN(X)
	RP-46,923-2	Y RP RF CH-B IN(G)
		——

	110-11C
	110-11B

CN134

	RP-46,943-1	C RP RF CH-B IN(X)
	RP-46,943-2	C RP RF CH-B IN(G)
		——

	111-20C
	111-20B

CN135

	CP-101,442-1	L;CAV IN
CN PANEL019-11		L;DUBH;COMPONENT IN
	CP-101,441-2	VIDEO LINE IN(G)
	CP-101,441-1	VIDEO LINE IN(X)

	112-15C
	102-15C,111-3A
	103-12B,105-10A
	103-12A,105-10C

CN136

	CP-101441-3	REF VIDEO IN(X)
	CP-101441-5	DUB REF VIDEO IN(X)
CN PANEL 025-9		DUB REF VIDEO OUT(X)
CN PANEL 019-5		DUB B-Y/C DO OUT(X)
CN PANEL 019-3		DUB R-Y/Y DO OUT(X)
CN PANEL 014-2		TV VIDEO OUT(X)
CP-101441-7		L;EXT/H;AUTO IN
CP-101442-3		GND
CP-101441-4		REF VIDEO IN(G)
CP-101441-6		DUB REF VIDEO IN(G)
CN PANEL 025-10		DUB REF VIDEO OUT(G)
CN PANEL 018-5		DUB B-Y/C DO OUT(G)
CN PANEL 019-4		DUB R-Y/Y DO OUT(G)
CN PANEL 014-6		TV VIDEO OUT(G)
CP-101442-2		REG +5V OUT
CP-101442-2		REG -5V OUT

	101-5B
	101-6B
	101-13B
	102-6A
	102-7C
	103-11C
	212-11
	101-5C
	101-6C
	101-13C
	102-6B
	102-7B
	103-11B
+5V	
-5V	

CN137

	CN PANEL,018-X	REF VIDEO OUT(X)
	CN PANEL,018-G	REF VIDEO OUT(G)

	101-12B
	101-12C

CN140

A B C D E F G H

MB-331(2/4)

DM-56PC

CN111

	A		B	
212-16,207-6A	VIDEO WITH VITC OUT	1	DEMOD Y OUT(G)	108-8A
108-8C	DEMOD Y OUT(G)	2	DUB Y OUT(G)	125-3A
136-2,102-15C	L;CTDM IN	3	COMPONENT Y IN(G)	103-6B
	——	4	SUB DEMOD Y OUT(G)	105-27B
130-5	VIDEO/RF METER OUT	5	L;TBC CONFI MODE IN	101-9B,107-22C,212-34
209-9A	RF ENVELOPE OUT	6	BID LEVEL IN	106-16C,108-16C
211-8,109-2B,208-16A	TAPE DIRECTION IN	7	H;FAST SPEED DET IN	206-10B,108-13B
112-16A	Y DROP OUT IN(X)	8	L;F BID IN	107-3A,109-3A
102-17C,106-5A,211-28	H;NORMAL FWD IN	9	NC	
112-16C	C DROPOUT IN	10	H;REW MODE IN	211-24,108-14C
	——	11	H;F.FWD MODE IN	211-23,108-14A
	——	12	——	
	——	13	——	
	——	14	——	
	——	15	C DT RF CH-A IN(G)	116-2
	——	16	C RP RF CH-A IN(G)	119-1
	——	17	C RF CH-A OUT(G)	103-19B
	——	18	——	
	——	19	C DT RF CH-B IN(G)	117-3
	——	20	C RP RF CH-B IN(G)	134-2
	——	21	C RF CH-B OUT(G)	103-20B
105-16C,107-22A	EDGE-P IN	22	EDGE-N IN	107-22B,105-16B
	——	23	——	
	——	24	CHROMA EE IN(G)	104-8A
	——	25	C DROPOUT OUT(G)	
	——	26	——	
211-25,102-26B	H;CHROMA MUTE IN	27	DEMOD C OUT(G)	109-26A
109-26C	DEMOD C OUT(G)	28	DUB R-Y/B-Y OUT(G)	125-4A
	——	29	——	
-5V	REG -5V IN	30	REG -5V IN	-5V
-12V	REG -12V IN	31	REG -12V IN	-12V
	GND	32	GND	

C

108-8B	DEMOD Y OUT(X)	1
125-3B	DUB Y OUT(X)	2
103-6A	COMPONENT Y IN(X)	3
105-27C	SUB DEMOD Y OUT(X)	4
207-29A,212-17,106-15A,102-23C	L;Y DROPOUT OUT	5
113-15C	VIDEO METER IN	6
DUS-345,8	C PCM REJ.OUT	7
211-27,129-4	L;DT HEAD/H;RP HEAD IN	8
205-21B,106-15B	H;VIDEO EE(DEMOD)IN	9
205-14C	L;COMPOSITE DT IN	10
5C,204-28B,205-14A,208-20C,211-26,215-9B	L;METAL/H;OXIDE IN	11
	——	12
207-19B,202-28C,103-27C	C SWITCHING PULSE IN	13
	——	14
116-3	C DT RF CH-A IN(X)	15
119-2	C RP RF CH-A IN(X)	16
103-19C	C RF CH-A OUT(X)	17
	——	18
117-2	C DT RF CH-B IN(X)	19
134-1	C RP RF CH-B IN(X)	20
103-20C	C RF CH-B OUT(X)	21
105-16A,107-24A	EDGE GND	22
	——	23
104-8C	CHROMA EE IN(X)	24
207-29B,107-19B,102-23A	L;C DROPOUT OUT(X)	25
	——	26
109-26B	DEMOD C OUT(X)	27
125-4B	DUB R-Y/B-Y OUT(X)	28
	——	29
-5V	REG -5V IN	30
-12V	REG -12V IN	31
	GND	32

DEC-42P

CN112

	A		B	
	GND	1	GND	
+12V	REG +12V IN	2	REG +12V IN	+12V
+5V	REG +5V IN	3	REG +5V IN	+5V
+9V	UNREG +9V IN	4	UNREG +9V IN	+9V
	——	5	——	
128-2	DUB B-Y/C DO IN(G)	6	——	
128-4	DUB R-Y/Y DO IN(G)	7	——	
127-2	CAV B-Y IN(G)	8	——	
127-4	CAV R-Y IN(G)	9	——	
105-22A	LINE CHROMA IN(G)	10	——	
105-29A	1H CHROMAIN(G)	11	——	
	——	12	——	
	——	13	——	
104-19C	Y DROPOUT OUT(X)	14	Y DROPOUT OUT(G)	
104-13C	C DROPOUT OUT(X)	15	C DROPOUT OUT(G)	
111-8A	Y DROPOUT OUT(TTL)	16	——	

C

	GND	1
+12V	REG +12V IN	2
+5V	REG +5V IN	3
+9V	UNREG +9V IN	4
	——	5
128-1	DUB B-Y/C DO IN(X)	6
128-3	DUB R-Y/Y DO IN(X)	7
127-1	CAV B-Y IN(X)	8
127-3	CAV R-Y IN(X)	9
105-22C	LINE CHROMA IN(X)	10
105-29C	1H CHROMA IN(X)	11
215-9A,208-21B,103-15B,205-21A,202-27A,104-16C	H;VIDEO REC/EE(MOD)IN	12
237-10A,211-46,130-2,104-17C	L;CTDM IN	13
130-6,211-47	L;Y-R.B IN	14
136-1	L;CAV IN	15
111-10A	C DROPOUT OUT	16

CN113

	A		B	
	——	1	——	
	——	2	——	
	——	3	——	
211-38	DEC B-Y FP1 OUT	4	——	
	——	5	B-Y ID IN	211-31
	——	6	——	
	——	7	——	
	——	8	——	
	——	9	——	
212-28	H;VITC GATE IN	10	——	
104-20A	Y SYNC OUT(G)	11	——	
104-12A	C SYNC OUT(G)	12	——	
	——	13	——	
	——	14	——	
	——	15	——	
	——	16	——	
125-2A	DUB R-Y/B-Y IN(G)	17	——	
	——	18	——	
105-25A	LINE Y IN(G)	19	——	
	——	20	——	
125-1A	DUB Y IN(G)	21	——	
	——	22	——	
122-1	CAV Y IN(G)	23	——	
	——	24	——	
104-14A	DEC R-Y/B-Y OUT(G)	25	——	
	——	26	——	
104-18A	DEC Y OUT(G)	27	——	
	——	28	——	
	——	29	——	
-5V	REG -5V IN	30	REG -5V IN	-5V
-12V	REG -12V IN	31	REG -12V IN	-12V
	GND	32	GND	

C

105-18C	COMB OFF OUT	1
130-7	LINE SCH IND OUT	2
211-45	L;B/W MODE OUT	3
211-39	DEC B-Y FP2 OUT	4
211-32	L;NON STD/H;STD IN	5
109-20C,202-27C,121-4,120-3,111-11C,104-15C,203-28A,204-28B,205-14A,208-20C,211-26,215-9B	L;METAL/H;OXIDE IN	6
	——	7
	——	8
	——	9
212-29	H;VITC REC IN	10
212-21,207-9C,104-20C	Y SYNC OUT(X)	11
104-12C	C SYNC OUT(X)	12
	——	13
104-24C	L;V BLK OUT	14
111-6C	VIDEO METER OUT	15
	——	16
125-2B	DUB R-Y/B-Y IN(X)	17
	——	18
105-25C	LINE Y IN(X)	19
	——	20
125-1B	DUB Y IN(X)	21
	——	22
122-2	CAV Y IN(X)	23
	——	24
104-14C	DEC R-Y/B-Y OUT(X)	25
	——	26
104-18C	DEC Y OUT(X)	27
	——	28
	——	29
-5V	REG -5V IN	30
-12V	REG -12V IN	31
	GND	32

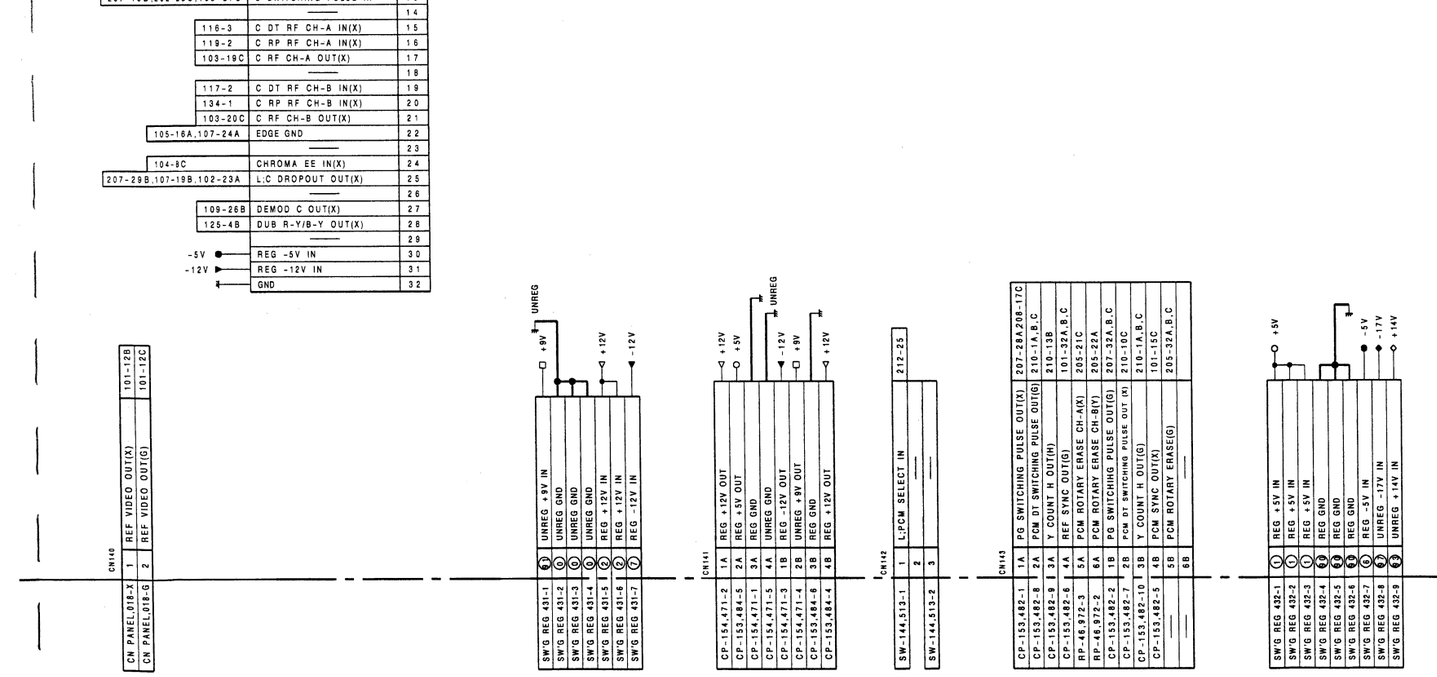

MB-331(2/4)

MB-331 BOARD **(2/4)**

BOARD NO.1-635-561-11,12

BVW-85P(EK) ;#10001-

17-775

17-776

I J K L M N O

1 2 3 4 5

MB-331(3/4); MOTHER BOARD

AFM-1

A	CN202	B	
GND	1	GND	
REG +12V IN	2	REG +12V IN	
REG +5V IN	3	REG +5V IN	
UNREG +9V IN	4	UNREG +9V IN	
——	5	——	
GND	6	CH-4 REC/EE LEVEL IN(G)	215-1B
——	7	——	
GND	8	CH-4 PB OUT(G)	215-2B
GND	9	CH-4 PB LEVEL IN(G)	215-3B
GND	10	CH-4 LINE OUT(G)	215-4B,237-1B
——	11	——	
——	12	——	
——	13	——	
——	14	——	
GND	15	C RF CH-B AGC IN(G)	103-23B
GND	16	AFM REC RF OUT(G)	223-5
GND	17	C RF CH-B AGC IN(G)	103-22B
——	18	——	
——	19	——	
——	20	——	
GND	21	CH-3 PB OUT(G)	215-5B
GND	22	CH-3 PB LEVEL IN(G)	215-6B
GND	23	CH-3 LINE OUT(G)	215-7B,237-2B
——	24	——	
GND	25	CH-3 REC/EE LEVEL IN(G)	215-8B
GND	26	H;AFM MUTE IN	211-19
205-21A,112-12C,104-16C,103-15B,208-21B,215-9A H;VIDEO REC/EE(MOD)IN	27	L;VIDEO REC CONT IN	205-23A
GND	28	C SWITCHING PULSE IN(G)	
GND	29	DOC RF IN(G)	
REG -5V IN	30	REG -5V IN	
REG -12V IN	31	REG -12V IN	
GND	32	GND	

C		
GND	1	
REG +12V IN	2	
REG +5V IN	3	
UNREG +9V IN	4	
——	5	
215-1A CH-4 REC/EE LEVEL IN(X)	6	
——	7	
215-2A CH-4 PB OUT(X)	8	
215-3A CH-4 PB LEVEL IN(X)	9	
237-1A,215-4A CH-4 LINE OUT(X)	10	
——	11	
——	12	
——	13	
——	14	
103-23C C RF CH-B AGC IN(X)	15	
223-4 AFM REC RF OUT(X)	16	
103-22C C RF CH-A AGC IN(X)	17	
——	18	
——	19	
——	20	
215-5A CH-3 PB OUT(X)	21	
215-6A CH-3 PB LEVEL IN(X)	22	
237-2A,215-7A CH-3 LINE OUT(X)	23	
103-24C H;SQUELCH CONT IN	24	
215-8A CH-3 REC/EE LEVEL IN(X)	25	
——	26	
109-20C,120-3,113-6C,111-11C,104-15C,121-4,203-28A,204-28B,205-14A,208-20C,211-26,215-9B L;METAL/H;OXIDE IN	27	
207-19B,111-13C,103-27C C SWITCHING PULSE IN(X)	28	
103-29C DOC RF IN(X)	29	
-5V REG -5V IN	30	
-12V REG -12V IN	31	
GND	32	

AU-75P

A	CN203	B	
GND	1	GND	
REG +12V IN	2	REG +12V IN	
REG +5V IN	3	REG +5V IN	
UNREG +9V IN	4	UNREG +9V IN	
——	5	——	
——	6	——	
——	7	L;AUDIO CH-2 BIAS ON IN	204-5C,205-7C
211-18,204-8B L;AUDIO NR ON IN	8	——	
——	9	——	
225-9B,204-10A CH-1 PB/EE OUT(G)	10	——	
225-8A,204-11B CH-1 PB/EE OUT(X)	11	——	
225-11B,204-12A CH-2 PB/EE OUT(G)	12	——	
225-10A,204-13B CH-2 PB/EE OUT(X)	13	——	
——	14	——	
——	15	——	
225-8B,205-9C,204-16B L;AUDIO CH-2 PB IN	16	L;AUDIO CH-1 PB IN	204-16C,205-10A,225-10B
——	17	——	
GND	18	GND	
225-12A CH-1 REC/EE LEVEL IN(X)	19	——	
225-12B CH-1 REC/EE LEVEL IN(G)	20	——	
225-13A CH-2 REC/EE LEVEL IN(X)	21	——	
225-13B CH-2 REC/EE LEVEL IN(G)	22	——	
225-6B L;LIMITER ON IN	23	——	
225-7A L;MIXING TO CH-1 IN	24	——	
225-7B L;MIXING TO CH-2 IN	25	——	
204-27A CH-1 REC OUT(X)	26	——	
204-28A CH-1 REC AMP OUT(G)	27	——	
109-20C,120-3,113-6C,111-11C,104-15C,121-4,202-27C,204-28B,205-14A,208-20C,211-26,215-9B L;METAL/H;OXIDE IN	28	——	
——	29	——	
-5V REG -5V IN	30	REG -5V IN	-5V
-12V REG -12V IN	31	REG -12V IN	-12V
GND	32	GND	

C		
GND	1	
REG +12V IN	2	
REG +5V IN	3	
UNREG +9V IN	4	
205-7B,204-5A TIME CODE REC SIGNAL IN(X)	5	
205-7A,204-5B TIME CODE REC SIGNAL IN(G)	6	
205-8A,204-6B L;AUDIO CH-1 BIAS ON IN	7	
——	8	
——	9	
——	10	
——	11	
——	12	
——	13	
204-14A CH-2 PB IN(G)	14	
204-15A CH-2 PB IN(X)	15	
204-16A CH-1 PB IN(G)	16	
204-17A CH-1 PB IN(X)	17	
GND	18	
——	19	
——	20	
——	21	
204-27B CH-2 CROSS TALK OUT(X)	22	
NC CH-2 CROSS TALK OUT(G)	23	
204-27C CH-1 CROSS TALK OUT(X)	24	
NC CH-1 CROSS TALK OUT(G)	25	
——	26	
——	27	
204-29B CH-2 REC OUT(G)	28	
204-29A CH-2 REC OUT(X)	29	
-5V REG -5V IN	30	
-12V REG -12V IN	31	
GND	32	

A		
GND	1	
+12V REG +12V	2	
+5V REG +5V	3	
+9V UNREG +9V	4	
205-7B,203-5C TIME CODE REC S	5	
237-3B,225-14B CH-2 LINE C	6	
237-3A,225-14A CH-2 LINE C	7	
237-4B,225-15B CH-1 LINE C	8	
237-4A,225-15A CH-1 LINE C	9	
225-9B,203-10A CH-1 PB/EE	10	
225-9A CH-1 PB LEV	11	
225-11B,203-12A CH-2 PB/EE	12	
225-11A CH-2 PB LEV	13	
203-14C CH-2 PB O	14	
203-15C CH-2 PB O	15	
203-16C CH-1 PB O	16	
203-17C CH-1 PB O	17	
GND	18	
220-2 AUDIO CH-1 CON	19	
GND	20	
220-5 AUDIO CH-2 CON	21	
GND	22	
221-2 AUDIO CH-2	23	
GND	24	
221-5 AUDIO CH-1	25	
GND	26	
203-26A CH-1 REC	27	
203-27A CH-1 REC	28	
203-29C CH-2 REC	29	
-5V REG -5V	30	
-12V REG -12V	31	
GND	32	

C		
GND	1	
+12V REG +12V	2	
+5V REG +5V	3	
+9V UNREG +9	4	
205-7C,203-7B L;AUDIO CH-2 B	5	
205-8B L;BIAS OSC	6	
GND	7	
205-8C L;AUDIO CH-2	8	
212-45 L;AUDIO CH-1	9	
205-9A L;AUDIO CH-1	10	
GND	11	
211-17 L;AUDIO MU	12	
GND	13	
211-16 L;FAST/H;AUDIO	14	
GND	15	
225-10B,205-10A,203-16B L;AUDIO CH-1	16	
GND	17	
220-1 AUDIO CH-1 CON	18	
GND	19	
220-4 AUDIO CH-2 CON	20	
GND	21	
221-1 AUDIO CH-2	22	
GND	23	
221-4 AUDIO CH-1	24	
GND	25	
GND	26	
203-24C CH-1 CROSS TA	27	
205-10B L;AUDIO CH-2	28	
205-10C L;AUDIO CH-1	29	
-5V REG -5V	30	
-12V REG -12V	31	
GND	32	

CN211

MB-332,307-1	1	H;REC SERIAL REQUEST IN
MB-332,307-2	2	H;SVIREC READY OUT
MB-332,307-3	3	SVIREC SERIAL COMMAND IN
MB-332,307-4	4	SVIREC SERIAL STATUS OUT
MB-332,307-5	5	SVIREC SERIAL CLOCK OUT
MB-332,307-6	6	H;SV SERIAL REQUEST IN
MB-332,307-7	7	SV RESET COMMAND IN
MB-332,307-8	8	TAPE DIRECTION OUT
MB-332,307-9	9	EDIT CTL OUT
MB-332,307-10	10	L;AUDIO NR OUT
MB-332,307-11	11	L;AUDIO NR LAMP IN
MB-332,307-12	12	L;VITC LAMP IN
MB-332,307-13	13	L;LTC LAMP IN
MB-332,307-14	14	L;AUTO OFF LAMP IN
MB-332,307-15	15	H;REC ENABLE IN
MB-332,307-16	16	L;FAST/H;AUDIO ATT IN
MB-332,307-17	17	L;AUDIO MUTE IN
MB-332,307-18	18	L;AUDIO NR ON IN
MB-332,307-19	19	H;AFM MUTE IN
MB-332,307-20	20	REF HD OUT
MB-332,307-21	21	CHARACTER SIGNAL IN
MB-332,307-22	22	CHARACTER GATE IN
MB-332,307-23	23	H;F.FWD MODE IN
MB-332,307-24	24	H;REW MODE IN
MB-332,307-25	25	H;CHROMA MUTE IN
MB-332,307-26	26	L;METAL/H;OXIDE IN
MB-332,307-27	27	L;DT HEAD/H;RP HEAD IN
MB-332,307-28	28	H;NORMAL FWD IN
MB-332,307-29	29	L;NOISELESS PB IN
MB-332,307-30	30	NC
MB-332,307-31	31	B-Y ID IN
MB-332,307-32	32	L;NON STD/H;STD IN
MB-332,307-33	33	H;IN PHASE IN
MB-332,307-34	34	REF FIRST FIELD OUT
MB-332,307-35	35	VIDEO OUT 1ST FIELD OUT
MB-332,307-36	36	PB B-Y FP1 OUT
MB-332,307-37	37	PB B-Y FP2 OUT
MB-332,307-38	38	DEC B-Y FP1 OUT
MB-332,307-39	39	DEC B-Y FP2 OUT
MB-332,307-40	40	AUDIO SYSTEM (H;PCM) OUT
MB-332,307-41	41	H;EXT SYNC DET OUT
MB-332,307-42	42	L;SH ADVANCE OFF OUT
MB-332,307-43	43	L;TBC BYPASS OFF OUT
MB-332,307-44	44	L;PLAYER BYW-10 OUT
MB-332,307-45	45	L;BIW MODE OUT
MB-332,307-46	46	L;CTON OUT
MB-332,307-47	47	L;Y-R.B OUT
MB-332,307-48	48	L;AFM/SELECT IN
MB-332,307-49	49	L;THREAD END IN
MB-332,307-50	50	L;THREAD/UNTHREAD END IN

CN212

MB-332,308-1	1	SYNCHRONIZE IN
MB-332,308-2	2	L;STANDBY ON STATUS IN
MB-332,308-3	3	L;NORMAL PLAY STATUS IN
MB-332,308-4	4	L;CASSETTE IN STATUS IN
MB-332,308-5	5	L;REMOTE-1 OUT
MB-332,308-6	6	L;REMOTE-2 OUT
MB-332,308-7	7	L;REC INHIBIT OUT
MB-332,308-8	8	L;CAPSTAN LOCK 4F OUT
MB-332,308-9	9	L;CAPSTAN LOCK 2HF OUT
MB-332,308-10	10	L;CAPSTAN LOCK 8F OUT
MB-332,308-11	11	L;EXTH;AUTO OUT
MB-332,308-12	12	1/2 VD OUT
MB-332,308-13	13	REF VD OUT
MB-332,308-14	14	Y COUNT H OUT
MB-332,308-15	15	C COUNT H OUT
MB-332,308-16	16	VIDEO WITH VITC OUT
MB-332,308-17	17	L;Y DROPOUT OUT
MB-332,308-18	18	L;EMERGENCY OUT
MB-332,308-19	19	INTERPOLATE CTL OUT
MB-332,308-20	20	L;TIME CODE EXIST OUT
MB-332,308-21	21	Y SYNC OUT
MB-332,308-22	22	SV SYNC OUT
MB-332,308-23	23	READER TIME CODE OUT
MB-332,308-24	24	L;AFM SEL OUT
MB-332,308-25	25	L;PCM SEL OUT
MB-332,308-26	26	LTC IN
MB-332,308-27	27	VITC IN
MB-332,308-28	28	H;VITC GATE IN
MB-332,308-29	29	H;VITC REC IN
MB-332,308-30	30	SV 1 IN
MB-332,308-31	31	SV 2 IN
MB-332,308-32	32	L;REC IN
MB-332,308-33	33	H;ADVANCE OFF IN
MB-332,308-34	34	L;TBC CONFI MODE IN
MB-332,308-35	35	L;SH ADVANCE OFF IN
MB-332,308-36	36	H;COMB FILTER OFF IN
MB-332,308-37	37	H;TBC BYPASS ON IN
MB-332,308-38	38	H;SERVO REF HOLD IN
MB-332,308-39	39	L;Y IMPACT ERROR INH
MB-332,308-40	40	DL PB V OUT
MB-332,308-41	41	DIGITAL DEC CHECK OUT
MB-332,308-42	42	DTV OUT
MB-332,308-43	43	H;AUTO STEREO IN
MB-332,308-44	44	NC
MB-332,308-45	45	L;AUDIO CH-1 MUTE IN
MB-332,308-46	46	L;H SHIFT INH IN
MB-332,308-47	47	L;VISC EXIST OUT
MB-332,308-48	48	L;C IMPACT ERROR INH OUT
MB-332,308-49	49	UNREG -17V OUT
MB-332,308-50	50	UNREG -17V OUT

CN213

RE-28,814-1	1	UNREG +14V OUT
RE-28,814-2	2	REG +12V OUT
RE-28,814-3	3	GND
RE-36,806-1	4	UNREG +14V OUT
RE-36,806-2	5	UNREG GND
RE-36,806-3	6	UNREG -17V OUT

CN214

MB-192,307-1	1	REG -12V OUT
MB-192,307-2	2	REG -5V OUT
MB-192,307-3	3	UNREG GND
MB-192,307-4	4	UNREG GND
MB-192,307-5	5	UNREG +14V OUT
MB-192,307-6	6	UNREG +9V OUT

AU-76P

CN204

A			B	
	GND	1	GND	
+12V	REG +12V IN	2	REG +12V IN	+12V
+5V	REG +5V IN	3	REG +5V IN	+5V
+9V	UNREG +9V IN	4	UNREG +9V IN	+9V
205-7B,203-5C	TIME CODE REC SIGNAL IN(X)	5	TIME CODE REC SIGNAL IN(G)	203-6C,205-7A
237-3B,225-14B	CH-2 LINE OUT(G)	6	L;AUDIO CH-1 BIAS ON IN	203-7C,205-8A
237-3A,225-14A	CH-2 LINE OUT(X)	7	GND	
237-4B,225-15B	CH-1 LINE OUT(G)	8	L;AUDIO NR ON IN	203-8A,211-18
237-4A,225-15A	CH-1 LINE OUT(X)	9	GND	
225-9B,203-10A	CH-1 PB/EE IN(G)	10	GND	
225-9A	CH-1 PB LEVEL IN	11	CH-1 PB/EE IN(X)	203-11A,225-8A
225-11B,203-12A	CH-2 PB/EE IN(G)	12	GND	
225-11A	CH-2 PB LEVEL IN	13	CH-2 PB/EE IN(X)	203-13A,225-10A
203-14C	CH-2 PB OUT(G)	14	L;SLOW LPF IN	205-9B
203-15C	CH-2 PB OUT(X)	15	GND	
203-16C	CH-1 PB OUT(G)	16	L;AUDIO CH-2 PB IN	203-16A,205-9C,225-8B
203-17C	CH-1 PB OUT(X)	17	GND	
	GND	18	GND	
220-2	AUDIO CH-1 CONF HEAD(Y)	19	AUDIO CH-1 CONF HEAD(X)	220-3
	GND	20	GND	
220-5	AUDIO CH-2 CONF HEAD(Y)	21	AUDIO CH-2 CONF HEAD(X)	220-6
	GND	22	GND	
221-2	AUDIO CH-2 HEAD(Y)	23	AUDIO CH-2 HEAD(X)	221-3
	GND	24	GND	
221-5	AUDIO CH-1 HEAD(Y)	25	AUDIO CH-1 HEAD(X)	221-6
	GND	26	GND	
203-26A	CH-1 REC IN(X)	27	CH-2 CROSS TALK IN(X)	203-22C
203-27A	CH-1 REC IN(G)	28	L;METAL/H;OXIDE IN	104-15C,111-11C,113-6C,120-3,121-4,202-27C,203-28A,205-14A,208-20C,211-26,215-9B,109-20C
203-29C	CH-2 REC IN(X)	29	CH-2 REC IN(G)	203-28C
-5V	REG -5V IN	30	REG -5V IN	-5V
-12V	REG -12V IN	31	REG -12V IN	-12V
	GND	32	GND	

109-20C,203-28A,204-28B,121-4,202-27C,120-3,113-6C,111-11C,104-15C ,208-20C,211-26,215-9B

C

	GND	1
+12V	REG +12V IN	2
+5V	REG +5V IN	3
+9V	UNREG +9V IN	4
205-7C,203-7B	L;AUDIO CH-2 BIAS ON IN	5
205-8B	L;BIAS OSC ON IN	6
	GND	7
205-8C	L;AUDIO CH-2 CONF IN	8
212-45	L;AUDIO CH-1 MUTE IN	9
205-9A	L;AUDIO CH-1 CONF IN	10
	GND	11
211-17	L;AUDIO MUTE IN	12
	GND	13
211-16	L;FAST/H;AUDIO ATT IN	14
	GND	15
205-10A,203-16B	L;AUDIO CH-1 PB IN	16
	GND	17
220-1	AUDIO CH-1 CONF HEAD(G)	18
	GND	19
220-4	AUDIO CH-2 CONF HEAD(G)	20
	GND	21
221-1	AUDIO CH-2 HEAD(G)	22
	GND	23
221-4	AUDIO CH-1 HEAD(G)	24
	GND	25
	GND	26
203-24C	CH-1 CROSS TALK IN(X)	27
205-10B	L;AUDIO CH-2 REC IN	28
205-10C	L;AUDIO CH-1 REC IN	29
-5V	REG -5V IN	30
-12V	REG -12V IN	31
	GND	32

TC-40PC

CN205

A			B	
	GND	1	GND	
+12V	REG +12V IN	2	REG +12V IN	+12V
+5V	REG +5V IN	3	REG +5V IN	+5V
+9V	UNREG +9V IN	4	UNREG +9V IN	+9V
217-1	TIME CODE HEAD(X)	5	TIME CODE HEAD(Y)	217-2
	GND	6	GND	
204-5B,203-6C	TIME CODE REC SIGNAL OUT(G)	7	TIME CODE REC SIGNAL OUT(X)	203-5C,204-5A
204-6B,203-7C	L;AUDIO CH-1 BIAS ON OUT	8	L;BIAS OSC ON OUT	204-6C
204-10C	L;AUDIO CH-1 CONF OUT	9	L;SLOW LPF OUT	204-14B
225-10B,204-16C,203-16B	L;AUDIO CH-1 PB OUT	10	L;AUDIO CH-2 REC OUT	204-28C
237-8B	TIME CODE OUT(G)	11	TIME CODE OUT(X)	237-7A
237-6B	EXT TIME CODE IN(G)	12	EXT TIME CODE IN(X)	237-5A
212-23	READER TIME CODE OUT	13	LTC IN	212-26
	L;METAL/H;OXIDE IN	14	H;REC ENABLE IN	211-15
211-1	H;REC SERIAL REQUEST IN	15	H;SV/REC READY OUT	206-23A,211-2
211-4,206-22B	SV/REC SERIAL STATUS OUT	16	SV/REC SERIAL CLOCK OUT	206-23B,211-5
206-17A	L;ASSEMBLE REC OUT	17	L;NORMAL REC OUT	206-17B
206-18A	TAPE SPEED 2 IN	18	TAPE SPEED 3 IN	206-18B
206-19A	ROTARY ERASE TIMING IN	19	CB REC OFF TIMING IN	206-19B
206-20A	YB REC OFF TIMING IN	20	YA REC OFF TIMING IN	206-20B
202-27A,112-12C,104-16C,103-15B,208-21B,215-9A	H;VIDEO REC/EE(MOD)OUT	21	H;VIDEO EE(DEMOD)OUT	105-15B,111-9C
222-5	L;ROTARY ERASE CH-A ON OUT	22	L;C CH-B REC ENABLE OUT	223-3
202-27B	L;VIDEO REC CONT OUT	23	L;Y CH-B REC ENABLE OUT	222-3
218-3	TIME CODE ERASE HEAD(G)	24		
218-1	TIME CODE ERASE HEAD(X)	25	CH-1 ERASE HEAD(X)	218-4
218-2	TIME CODE ERASE HEAD(Y)	26	CH-1 ERASE HEAD(Y)	218-5
218-9	CH-2 ERASE HEAD(G)	27	CH-1 ERASE HEAD(G)	218-6
218-7	CH-2 ERASE HEAD(X)	28		
218-8	CH-2 ERASE HEAD(Y)	29		
-5V	REG -5V IN	30	REG -5V IN	-5V
-12V	REG -12V IN	31	REG -12V IN	-12V
	GND	32	GND	

C

	GND	1
+12V	REG +12V IN	2
+5V	REG +5V IN	3
+9V	UNREG +9V IN	4
217-3	TIME CODE HEAD(G)	5
	GND	6
204-5C,203-7B	L;AUDIO CH-2 BIAS ON OUT	7
204-8C	L;AUDIO CH-2 CONF OUT	8
225-8B,204-16B,203-16A	L;AUDIO CH-2 PB OUT	9
204-29C	L;AUDIO CH-1 REC OUT	10
237-8A	TIME CODE OUT(Y)	11
237-6A	EXT TIME CODE IN(Y)	12
212-20	L;TIME CODE EXIST OUT	13
111-10C	L;COMPOSITE DT OUT	14
211-3,206-22C	SV/REC SERIAL COMMAND IN	15
208-16C	H;CTL REC OUT	16
206-17C	TAPE SPEED 1 IN	17
212-12,209-10A,208-18C,206-18C	1/2 VD IN	18
206-19C	CA REC OFF TIMING IN	19
223-1,222-1	L;VIDEO REC OUT	20
222-4	L;ROTARY ERASE CH-B ON OUT	21
223-2	L;C CH-A REC ENABLE OUT	22
222-2	L;Y CH-A REC ENABLE OUT	23
		24
207-28C	CAP ADVANCE OUT	25
		26
219-3	FULL ERASE HEAD(G)	27
219-1	FULL ERASE HEAD(X)	28
219-2	FULL ERASE HEAD(Y)	29
-5V	REG -5V IN	30
-12V	REG -12V IN	31
	GND	32

SV-82PC

CN206

A			B	
	GND	1	GND	
+12V	REG +12V IN	2	REG +12V IN	+12V
+5V	REG +5V IN	3	REG +5V IN	+5V
+9V	UNREG +9V IN	4	UNREG +9V IN	+9V
225-4A,208-5A,207-5A	V REF OUT	5	1/2V REF OUT	207-5B,208-5B
225-5A	TRACKING CONTROL LEVEL IN(G)	6	SYNCHRONIZE IN	212-1
207-7A	S-REEL SHAPED FG(A)IN	7	S-REEL 4FG IN	207-7B
226-12	L;LOADING MUTE OUT	8	T-REEL 4FG IN	207-8B
207-9A	REF VD IN	9	PB VD IN	207-9B
226-5	LOADING DIRECTION OUT	10	H;FAST SPEED DET OUT	111-7B,108-13B
209-11A,208-11A	SWITCHED CTL IN	11	CAPSTAN FWD/REV IN	207-11B,208-11B,210-29C,229-4
208-12A	D/A 0 OUT	12	D/A 1 OUT	208-12B
207-13A	D/A 3 OUT	13	D/A 4 OUT	207-13B
207-13C	PG SW PULSE EDGE IN	14	S-REEL PWM OUT	207-14B
208-16B	STOP SERVO FG(B)IN	15	L;SMALL/H;LARGE OUT	207-15B
207-16A	L;T CW OUT	16	SWITCHED PG SW PULSE IN	207-16B
207-17B	DELAYED PG SW PULSE OUT	17	L;EMERGENCY OUT	212-18
205-18A	TAPE SPEED 2 OUT	18	TAPE SPEED 3 OUT	205-18B
205-19A	ROTARY ERASE TIMING OUT	19	CB REC OFF TIMING OUT	205-19B
205-20A	YB REC OFF TIMING OUT	20	YA REC OFF TIMING OUT	205-20B
211-4B	L;THREAD END IN	21	TAPE TENSION 1 IN	207-22C
108-13A	ANALOG TAPE SPEED OUT	22	SV/REC SERIAL STATUS OUT	211-4,205-16A
211-2,205-15B	H;SV/REC READY OUT	23	SV/REC SERIAL CLOCK OUT	205-16B,211-5
208-23C	CAPSTAN FWD/REV DET IN	24	CAPSTAN SHAPED FG(A)IN	208-24A,209-13A
208-25A	D 0 IN/OUT	25	D 1 IN/OUT	208-25B
208-26A	D 3 IN/OUT	26	D 4 IN/OUT	208-26B
208-27A	D 6 IN/OUT	27	D 7 IN/OUT	208-27B
208-28A	A 1 OUT	28	A 2 OUT	208-28B
208-29A	L;RD OUT	29	L;WR OUT	208-29B
-5V	REG -5V IN	30	REG -5V IN	-5V
-12V	REG -12V IN	31	REG -12V IN	-12V
	GND	32	GND	

C

+12V	REG +12V	2
+5V	REG +5V	3
+9V	UNREG +9V	4
225-4B	TRACKING CONTROL LEVEL IN(X)	5
209-8A	L;DT ON IN	6
207-7C	S-REEL REV/FWD DET IN	7
207-8C	T-REEL REV/FWD DET IN	8
226-6	LOADING SPEED OUT	9
211-6	H;SV SERIAL REQUEST IN	10
228-3	LOADING GUIDE CONT OUT	11
208-12C	D/A 2 OUT	12
230-1	H;REEL POWER ON OUT	13
207-14C	T-REEL PWM OUT	14
207-15C	L;S CCW OUT	15
226-7	LOADING FG IN	16
205-17C	TAPE SPEED 1 OUT	17
212-12,209-10A,208-18C,205-18C	1/2 VD OUT	18
205-19C	CA REC OFF TIMING OUT	19
211-5D	L;THREAD/UNTHREAD END IN	20
207-23A	TAPE TENSION 2 IN	21
211-3,205-15C	SV/REC SERIAL COMMAND IN	22
208-23B,207-24C	SV CLOCK OUT	23
208-24C	CAPSTAN 4FG IN	24
208-25C	D 2 IN/OUT	25
208-26C	D 5 IN/OUT	26
208-27C	A 0 OUT	27
208-28C	L;CS OUT	28
226-4207-29C,208-29C	SERVO RESET OUT	29
-5V	REG -5V IN	30
-12V	REG -12V IN	31
	GND	32

MB-331 BOARD (3/4)

BOARD NO.1-635-561-11,12
BVW-85P(EK) ;#10001-

MB-331(3/4)

17-783

17-784

1 2 3 4 5

I J K L M N O

MB-331(4/4); MOTHER BOARD

SV-121

CN207

A		B		
	GND	1	GND	
+12V	REG +12V IN	2	REG +12V IN	+12V
+5V	REG +5V IN	3	REG +5V IN	+5V
+9V	UNREG +9V IN	4	UNREG +9V IN	+9V
225-4A,208-5A,206-5A	V REF IN	5	1/2 V REF IN	206-5B,208-5B
212-16,111-1A	VIDEO WITH VITC IN	6	—	
206-7A	S-REEL SHAPED FG(A)OUT	7	S-REEL 4FG OUT	206-7B
	T-REEL SHAPED FG(A)OUT	8	T-REEL 4FG OUT	206-8B
206-9A	REF VD OUT	9	PB VD OUT	206-9B
212-22,101-15A	SV SYNC IN	10	INCOME/EXT IN	208-19C
	—	11	CAPSTAN FWD/REV IN	206-11B,208-11B,210-29C,229-4
206-14C	DRUM SHAPED PHASE PG IN	12	DRUM SHAPED SPEED FG IN	208-15A
206-13A	D/A 3 IN	13	D/A 4 IN	206-13B
110-13C	PCM CLAMP MUTE OUT	14	S-REEL PWM IN	206-14B
	—	15	L:SMALL/H:LARGE IN	206-15B
206-16A	L:T CW IN	16	SWITCHED PG SW PULSE OUT	206-16B
210-8A	DT PG SWITCH PULSE OUT	17	DELAYED PG SW PULSE IN	206-17A
210-15B	H:NORMAL SW POSITION IN	18	L:DT OFF IN	210-15C
110-14C	Y SWITCHING PULSE OUT	19	C SWITCHING PULSE OUT	103-27C,111-13C,202-28C
230-5	S-REEL FG-1 IN	20	S-REEL FG-2 IN	230-4
230-7	T-REEL FG-2 IN	21	GND(REEL FG)	230-11
	—	22	—	
208-21C	TAPE TENSION 2 OUT	23	S-REEL CURRENT IN	230-2
230-9	T-REEL CURRENT IN	24	GND(REEL CURRENT)	207-23C,230-10
230-3	S-REEL MOTOR DRIVE OUT	25	T-REEL MOTOR DRIVE OUT	230-6
227-1	VCC(S-TENSION SENSOR)	26	S-TENSION SENSOR(+)IN	227-2
227-4	GND(S-TENSION SENSOR)	27	—	
208-17C,143-1A	PG SWING PULSE OUT	28	—	
	—	29	—	
-5V	REG -5V IN	30	REG -5V IN	-5V
-12V	REG -12V IN	31	REG -12V IN	-12V
	GND	32	GND	

C

	GND	1
+12V	REG +12V IN	2
+5V	REG +5V IN	3
+9V	UNREG +9V IN	4
	—	5
210-6C	PCM Y SWP DELAY OUT	6
206-7C	S-REEL REV/FWD DET OUT	7
206-8C	T-REEL REV/FWD DET OUT	8
212-21,113-11C,104-20C	Y SYNC IN(X)	9
	—	10
229-3,210-29B	CAPSTAN CURRENT IN	11
	—	12
206-14A	PG SW PULSE EDGE OUT	13
206-14C	T-REEL PWM IN	14
206-15C	L:S CCW IN	15
107-2B	TBC SWITCHING PULSE OUT	16
208-18B	H:DT HEAD SELECT IN	17
210-15A	DT SWITCHING PULSE IN	18
230-12	VCC(REEL FG)	19
230-8	T-REEL FG-1 IN	20
211-7,208-21C	SV RESET COMMAND IN	21
206-21B	TAPE TENSION 1 OUT	22
230-10,207-24B	GND(REEL CURRENT)	23
208-23B,208-23C	SV CLOCK IN	24
	GND(REEL MOTOR DRIVE)	25
227-3	S-TENSION SENSOR(-)IN	26
210-23C	PCM Y SWP TRIG IN	27
205-25C	CAP ADVANCE IN	28
226-4,208-29C,206-29C	SERVO RESET IN	29
-5V	REG -5V IN	30
-12V	REG -12V IN	31
	GND	32

SV-122

CN208

A		B		
	GND	1	GND	
+12V	REG +12V IN	2	REG +12V IN	+12V
+5V	REG +5V IN	3	REG +5V IN	+5V
+9V	UNREG +9V IN	4	UNREG +9V IN	+9V
225-4A,207-5A,208-5A	V REF IN	5	1/2 V REF IN	206-5B,207-5B
	—	6	SYSTEM 2 OUT	209-5C
209-6B	SYSTEM 4 OUT	7	SYSTEM 5 OUT	209-6C
209-7B	SYSTEM 7 OUT	8	GUIDE SW 1 IN	226-1
216-1	CTL HEAD(X)	9	CTL HEAD(Y)	216-2
211-9	EDIT CTL OUT	10	INTERPOLATE CTL OUT	212-19
209-11A,208-11A	SWITCHED CTL OUT	11	CAPSTAN FWD/REV OUT	206-11B,207-11B,210-29C,229-4
206-12A	D/A 0 IN	12	D/A 1 IN	206-12B
229-1	H:CAPSTAN POWER ON OUT	13	—	
228-5	DRUM SPEED FG IN	14	DRUM PHASE PG IN	228-3
207-12B	DRUM SHAPED SPEED FG OUT	15	DRUM ERROR OUT	228-1
111-7A,109-2B,211-8	TAPE DIRECTION OUT	16	STOP SERVO FG(B)OUT	208-15A
205-17A	L:ASSEMBLE REC IN	17	L:NORMAL REC IN	205-17B
	—	18	H:DT HEAD SELECT IN	207-17C
	—	19	—	
	—	20	—	215-9A
	—	21	H:VIDEO REC/EE(MOD) IN	103-15B,104-18C,112-12C,202-27A
229-5	VCC(CAPSTAN FG)	22	CAPSTAN FG(A) IN	229-6
229-8	GND(CAPSTAN FG)	23	SV CLOCK IN	205-21A,206-23C,207-24C
209-13A,208-24B	CAPSTAN SHAPED FG(A) OUT	24	CAPSTAN SHAPED FG(B) OUT	209-11C
206-25A	D 0 IN/OUT	25	D 1 IN/OUT	206-25B
206-26A	D 3 IN/OUT	26	D 4 IN/OUT	206-26B
206-27A	D 6 IN/OUT	27	D 7 IN/OUT	206-27B
205-28A	A 1 IN	28	A 2 IN	206-28B
205-29A	L:RD IN	29	L:WR IN	206-29B
-5V	REG -5V IN	30	REG -5V IN	-5V
-12V	REG -12V IN	31	REG -12V IN	-12V
	GND	32	GND	

C

	GND	1
+12V	REG +12V IN	2
+5V	REG +5V IN	3
+9V	UNREG +9V IN	4
	—	5
209-5A	SYSTEM 3 OUT	6
209-7A	SYSTEM 6 OUT	7
226-2	GUIDE SW 2 IN	8
216-3	CTL HEAD(G)	9
	—	10
229-2	CAPSTAN ERROR OUT	11
206-12C	D/A 2 IN	12
228-7	REG -5V OUT	13
207-12A	DRUM SHAPED PHASE PG OUT	14
228-2	DRUM CURRENT IN	15
205-16C	H:CTL REC IN	16
143-1A,207-28A	PG SW PULSE IN	17
212-12,205-18C,209-10A,208-18C	1/2 VD IN	18
207-10B	INCOME/EXT OUT	19
109-20C,121-4,120-3,113-6C,111-11C,104-15C,202-27C,203-28A,204-28B,205-14A,211-26,215-9B	L:METAL/H:OXIDE OUT	20
211-7,207-21C	SV RESET COMMAND IN	21
229-7	CAPSTAN FG(B)IN	22
206-24A	CAPSTAN FWD/REV DET OUT	23
206-24C	CAPSTAN 4FG OUT	24
206-25C	D 2 IN/OUT	25
206-26C	D 5 IN/OUT	26
206-27C	A 0 IN	27
206-28C	L:CS IN	28
226-4207-29C,206-29C	SERVO RESET IN	29
-5V	REG -5V IN	30
-12V	REG -12V IN	31
	GND	32

DT-13PC

CN209

A		B		
	GND	1	GND	
+12V	REG +12V IN	2	REG +12V IN	+12V
+5V	REG +5V IN	3	REG +5V IN	+5V
+9V	UNREG +9V IN	4	UNREG +9V IN	+9V
	—	5	—	
208-6C	SYSTEM 3 IN	6	SYSTEM 4 IN	208-7A
208-7C	SYSTEM 6 IN	7	SYSTEM 7 IN	208-8A
206-6C	L:DT ON OUT	8	—	
111-6A	RF ENVELOPE IN	9	H:SERVO LOCK OUT	210-9B
212-12,208-18C,206-18C,205-18C	1/2 VD IN	10	—	
208-11A,206-11A	SWITCHED CTL IN	11	—	
—	—	12	—	
208-24A,208-24B	CAPSTAN SHAPED FG(A) IN	13	—	
—	—	14	—	
—	—	15	—	
106-14C	V SELECT OUT	16	—	
—	—	17	—	
—	—	18	—	
—	—	19	—	
—	—	20	—	
—	—	21	—	
—	—	22	—	
—	—	23	—	
—	—	24	—	
210-25A	L:ERASE OUT	25	BIAS(A) OUT	210-25B
—	—	26	SG(A) IN	210-26B
—	—	27	BIAS(A) OUT	210-27B
—	—	28	SG(B) IN	210-28B
210-29A	TRACK(A) OUT	29	—	
-5V	REG -5V IN	30	REG -5V IN	-5V
-12V	REG -12V IN	31	REG -12V IN	-12V
	GND	32	GND	

C

	GND	1
+12V	REG +12V IN	2
+5V	REG +5V IN	3
+9V	UNREG +9V IN	4
208-6B	SYSTEM 2 IN	5
208-7B	SYSTEM 5 IN	6
	—	7
210-9A	TO 1 OUT	8
	—	9
	—	10
208-24B	CAPSTAN SHAPED FG(B) IN	11
	—	12
210-8B	SWITCH PULSE IN	13
	—	14
106-15C	L:DT OFF OUT	15
	SKIP OUT	16
	—	17
	—	18
	—	19
	—	20
	—	21
	—	22
	—	23
	—	24
	—	25
	—	26
	—	27
210-28C	TRACK(B) OUT	28
	—	29
-5V	REG -5V IN	30
-12V	REG -12V IN	31
	GND	32

CN222

RP-46,875-1	L:VIDEO REC OUT	205-20C,223-1
RP-46,875-2	L:Y CH-A REC ENABLE OUT	205-23C
RP-46,875-3	L:Y CH-B REC ENABLE OUT	205-23B
RE-58,852-5	L:ROTARY ERASE CH-B ON OUT	205-21C
RE-58,852-4	L:ROTARY ERASE CH-A ON OUT	205-22A

CN223

RP-46,875-4	L:VIDEO REC OUT	205-20C,222-1
RP-46,875-5	L:C CH-A REC ENABLE OUT	205-22C
RP-46,875-6	L:C CH-B REC ENABLE OUT	205-22B
RP-46,931-5	AFM REC RF OUT(X)	202-16C
RP-46,931-6	AFM REC RF OUT(G)	202-16B

CN225

SW-144,511-12	L:AUDIO NR LAMP OUT	211-11
SW-144,511-11	L:VTC LAMP OUT	211-13
SW-144,518-4	L:REMOTE-1N	212-5
SW-144,518-3	L:AFM OUT	208-6A,207-5A,209-5A
SW-144,518-1	TRACKING CONTROL LEVEL IN(G)	205-6A
SW-144,511-8	H:MIXING TO STEREO OUT	123-25,212-43,233-1
SW-144,511-9	H:MIXING TO CH-1 IN	203-24A
BF-28,531-2	CH-1 PB LEVEL OUT(X)	203-11A,204-11B
BF-28,531-4	CH-1 PB/EE OUT(X)	204-11A
BF-28,531-9	CH-2 PB LEVEL IN	203-13A,204-13B
BF-28,531-8	CH-2 PB LEVEL OUT(X)	204-13A
BF-28,531-1	CH-1 REC/EE LEVEL IN(X)	203-19A
BF-28,531-6	CH-2 REC/EE LEVEL IN(X)	203-21A
BF-28,540-8	CH-2 LINE OUT(X)	204-7A,237-3A
BF-28,540-9	CH-1 LINE OUT(X)	204-9A,237-4A
SW-144,511-10	L:VITC LAMP OUT	211-12
SW-144,511-9	L:AUTO OFF LAMP OUT	211-14
SW-144,518-5	L:REMOTE-2 IN	212-6
SW-144,518-2	TRACKING CONTROL LEVEL IN(X)	206-5C
SW-144,511-4	L:AFM SEL IN	212-24
SW-144,511-5	L:LIMITER ON IN	203-23A
SW-144,511-7	L:MIXING TO CH-2 IN	203-25A
BF-28,540-2	L:AUDIO CH-2 PB OUT	203-16A,204-16B,205-9C
BF-28,531-5	CH-1 PB/EE OUT(G)	203-10A,204-10A
BF-28,540-1	L:AUDIO CH-1 PB OUT	203-18B,204-18C,205-10A
BF-28,531-10	CH-2 PB/EE OUT(G)	203-12A,204-12A
BF-28,531-2	CH-2 REC/EE LEVEL IN(G)	203-20A
BF-28,531-7	CH-1 REC/EE LEVEL IN(G)	203-22A
BF-28,540-7	CH-2 LINE OUT(G)	204-6A,237-3B
BF-28,540-5	CH-1 LINE OUT(G)	204-8A,237-4B

CN226

SE-146,703-1	GUIDE SW 1 IN	208-8B
SE-146,703-2	GUIDE SW 2 IN	208-8C
SE-146,703-3	LOADING GUIDE CONT OUT	208-11C
SE-146,703-4	SERVO RESET OUT	208-28C,207-29C,208-29C
SE-146,703-5	LOADING DIRECTION OUT	208-19A
SE-146,703-6	LOADING SPEED OUT	208-18C
SE-146,703-7	LOADING FG IN	208-16C
SE-146,703-8	UNREG +14V OUT	+14V
SE-146,703-9	UNREG -17V OUT	-17V
SE-146,703-10	UNREG GND	
SE-146,703-11	REG +5V OUT	+5V
SE-146,703-12	L:LOADING MUTE OUT	208-8A

CN227

TR-18,1-1	VCC(S-TENSION SENSOR)	207-26A
TR-18,1-2	S-TENSION SENSOR(+) IN	207-26B
TR-18,1-3	S-TENSION SENSOR(-) IN	207-26C
TR-18,1-4	GND(S-TENSION SENSOR)	207-27A

CN228

RE-28,811-1	DRUM ERROR OUT	208-15B
RE-28,811-2	DRUM CURRENT IN	208-15C
RE-28,811-3	DRUM PHASE PG IN(X)	208-14B
RE-28,811-4	DRUM PHASE PG IN(G)	208-14B
RE-28,811-5	DRUM SPEED FG (X)	208-14A
RE-28,811-6	DRUM SPEED FG (G)	208-13C
RE-28,811-7	REG -5V OUT	
RE-28,811-8	GND	

CN229

RE-28,813-1	H:CAPSTAN POWER ON OUT	208-13A
RE-28,813-2	CAPSTAN ERROR OUT	208-11C
RE-28,813-3	CAPSTAN CURRENT IN	207-11C,210-29B
RE-28,813-4	CAPSTAN FWD/REV OUT	208-11B,207-11B,208-11B,210-29C
RE-28,813-5	VCC(CAPSTAN FG)	208-22A
RE-28,813-6	CAPSTAN FG(A) IN	208-22B
RE-28,813-7	CAPSTAN FG(B) IN	208-22C
RE-28,813-8	GND(CAPSTAN FG)	208-23A

CN230

RE-36,807-1	H:REEL POWER ON OUT	208-13C
RE-36,807-2	S-REEL CURRENT IN	207-23B
RE-36,807-3	S-REEL MOTOR DRIVE OUT	207-25A
RE-36,807-4	S-REEL FG-1 IN	207-20A
RE-36,807-5	T-REEL MOTOR DRIVE OUT	207-25B
RE-36,807-6	T-REEL FG-2 IN	207-21A
RE-36,807-7	T-REEL FG-1 IN	207-20C
RE-36,807-8	T-REEL CURRENT IN	207-24A
RE-36,807-9	GND(REEL CURRENT)	207-23C,207-24B
RE-36,807-10	GND(REEL FG)	207-21B
RE-36,807-11	VCC(REEL FG)	207-19C
RE-36,807-12		

CN231

DT-15,611-1	DT ERROR(A) OUT	210-24A
DT-15,611-2	DT ERROR(B) OUT	210-24B
DT-15,611-3	DT ERROR(G)OUT	210-24C
DT-15,611-11	SG A(-) IN	210-26A
DT-15,611-12	SG A(+) IN	210-25C
DT-15,611-10	SG A(G)IN	210-26C
DT-15,611-8	SG B(-) IN	210-28A
DT-15,611-9	SG B(+) IN	210-27C
DT-15,611-7	SG B(G)IN	210-27A
DT-15,611-4	REG +12V OUT	+12V
DT-15,611-5	GND	
DT-15,611-6	REG -12V OUT	-12V

CN232

DP-73,522-1	REG +12V OUT	+12V
DP-73,522-2	REG +5V OUT	+5V
DP-73,522-3	GND	

CN233

CP-181,415-1	H:AUTO STEREO OUT	123-25,212-43,225-8A
CP-181,415-2	MONITOR VR 1 OUT(G)	233-4
CP-181,415-3	MONITOR VR 1 OUT(X)	233-3
CP-181,415-4	MONITOR VR 2 OUT(G)	233-2
CP-181,415-5	MONITOR VR 2 OUT(X)	233-1

CN234

HP-33,552-1	MONITOR VR 2 IN(X)	233-5
HP-33,552-2	MONITOR VR 2 IN(G)	233-4
HP-33,552-3	MONITOR VR 1 IN(X)	233-3
HP-33,552-4	MONITOR VR 1 IN(G)	233-2

CN235

RM-57,451-2	UNREG +14V OUT	+14V
RM-57,451-3	UNREG +9V OUT	+9V
RM-57,451-1	UNREG GND	
RM-57,451-13	D-GND	D-GND

MB-331(4/4)

SV-122

CW208

A		B	
	GND	1	GND
+12V	REG +12V IN	2	REG +12V IN
+5V	REG +5V IN	3	REG +5V IN
+9V	UNREG +9V IN	4	UNREG +9V IN
208-5A	V REF IN	5	1/2 V REF IN
	—	6	SYSTEM 2 OUT
209-6B	SYSTEM 4 OUT	7	SYSTEM 5 OUT
209-7B	SYSTEM 7 OUT	8	GUIDE SW 1 IN
216-1	CTL HEAD(X)	9	CTL HEAD(Y)
211-9	EDIT CTL OUT	10	INTERPOLATE CTL OUT
208-11A	SWITCHED CTL OUT	11	CAPSTAN FWD/REV OUT
206-12A	D/A 0 IN	12	D/A 1 IN
229-1	H:CAPSTAN POWER ON OUT	13	—
228-5	DRUM SPEED FG IN	14	DRUM PHASE PG IN
207-12B	DRUM SHAPED SPEED FG OUT	15	DRUM ERROR OUT
205-17A	TAPE DIRECTION OUT	16	STOP SERVO FG(B)OUT
	L:ASSEMBLE REC IN	17	L:NORMAL REC IN
	—	18	H:DT HEAD SELECT IN
	—	19	—
	—	20	—
	—	21	H:VIDEO REC/EE(MOD) IN
229-5	VCC(CAPSTAN FG)	22	CAPSTAN FG(A) IN
229-8	GND(CAPSTAN FG)	23	SV CLOCK IN
206-24B	CAPSTAN SHAPED FG(A) OUT	24	CAPSTAN SHAPED FG(B) OUT
206-25A	D 0 IN/OUT	25	D 1 IN/OUT
206-26A	D 3 IN/OUT	26	D 4 IN/OUT
206-27A	D 6 IN/OUT	27	D 7 IN/OUT
206-28A	A 1 IN	28	A 2 IN
206-29A	L:RD IN	29	L:WR IN
	REG -5V IN	30	REG -5V IN
	REG -12V IN	31	REG -12V IN
	GND	32	GND

C		
	GND	1
	REG +12V IN	2
	REG +5V IN	3
	UNREG +9V IN	4
	—	5
209-8A	SYSTEM 3 OUT	6
209-7A	SYSTEM 6 OUT	7
226-2	GUIDE SW 2 IN	8
216-3	CTL HEAD(G)	9
	—	10
229-2	CAPSTAN ERROR OUT	11
206-12C	D/A 2 IN	12
228-7	REG -5V OUT	13
207-12A	DRUM SHAPED PHASE PG OUT	14
228-2	DRUM CURRENT IN	15
205-16C	H:CTL REC IN	16
207-28A	PG SW PULSE IN	17
106-18C	1/2 VD IN	18
207-10B	INCOME/EXT OUT	19
211-26,215-9B	L:METAL/H:OXIDE OUT	20
211-7,207-21C	SV RESET COMMAND IN	21
229-7	CAPSTAN FG(B)IN	22
206-24A	CAPSTAN 4FG OUT	23
206-24C	CAPSTAN FWD/REV DET OUT	24
206-25C	D 2 IN/OUT	25
206-26C	D 5 IN/OUT	26
206-27C	A 0 IN	27
206-28C	L:CS IN	28
206-29C	SERVO RESET IN	29
	REG -5V IN	30
	REG -12V IN	31
	GND	32

DT-13PC

CW209

A		B	
	GND	1	GND
+12V	REG +12V IN	2	REG +12V IN
+5V	REG +5V IN	3	REG +5V IN
+9V	UNREG +9V IN	4	UNREG +9V IN
	—	5	—
208-6C	SYSTEM 3 IN	6	SYSTEM 4 IN
208-7C	SYSTEM 6 IN	7	SYSTEM 7 IN
206-6C	L:DT ON OUT	8	—
111-8A	RF ENVELOPE IN	9	H:SERVO LOCK OUT
212-12,208-18C,206-18C,205-18C	1/2 VD IN	10	—
208-11A,206-11A	SWITCHED CTL IN	11	—
—	—	12	—
208-24A,206-24B	CAPSTAN SHAPED FG(A) IN	13	—
—	—	14	—
—	—	15	—
106-14C	V SELECT OUT	16	—
—	—	17	—
—	—	18	—
—	—	19	—
—	—	20	—
—	—	21	—
—	—	22	—
—	—	23	—
—	—	24	—
210-25A	L:ERASE OUT	25	BIAS(A) OUT
—	—	26	SG(A) IN
—	—	27	BIAS(A) OUT
—	—	28	SG(B) IN
210-29A	TRACK(A) OUT	29	—
-5V	REG -5V IN	30	REG -5V IN
-12V	REG -12V IN	31	REG -12V IN
	GND	32	GND

C		
	GND	1
+12V	REG +12V IN	2
+5V	REG +5V IN	3
+9V	UNREG +9V IN	4
208-6B	SYSTEM 2 IN	5
208-7B	SYSTEM 5 IN	6
	—	7
210-9A	TO 1 OUT	8
	—	9
	—	10
208-24B	CAPSTAN SHAPED FG(B) IN	11
	—	12
210-8B	SWITCH PULSE IN	13
	—	14
	L:DT OFF OUT	15
106-15C	SKIP OUT	16
	—	17
	—	18
	—	19
	—	20
	—	21
	—	22
	—	23
	—	24
	—	25
	—	26
	—	27
210-28C	TRACK(B) OUT	28
	—	29
-5V	REG -5V IN	30
-12V	REG -12V IN	31
	GND	32

DT-14P

CW210

A		B	
	GND	1	GND
+12V	REG +12V IN	2	REG +12V IN
+5V	REG +5V IN	3	REG +5V IN
+9V	UNREG +9V IN	4	UNREG +9V IN
	—	5	—
	—	6	—
	—	7	—
207-17A	DT PG SWITCH PULSE IN	8	SWITCH PULSE OUT
209-8C	TO 1 IN	9	H:SERVO LOCK IN
	—	10	—
109-2A,107-2A	L:Y-SDO IN	11	L:C SDO IN
212-42,106-14B	DT V OUT	12	—
109-19A,107-18A	C GATED H IN	13	Y COUNT H IN
	—	14	—
207-18C	DT SWITCHING PULSE OUT	15	H:NORMAL SW POSITION OUT
	—	16	—
	—	17	—
	—	18	—
	—	19	—
110-12C	CH-B SYNC REF IN(X)	20	CH-B SYNC REF IN(G)
110-8C	CH-A SYNC REF IN(X)	21	CH-A SYNC REF IN(G)
	—	22	—
	—	23	—
231-1	DT ERROR(A) OUT	24	DT ERROR(B) OUT
208-25A	L:ERASE IN	25	BIAS(A)IN
231-4	SG A(-)IN	26	SG(A) OUT
231-9	SG B(G)IN	27	BIAS(B) IN
231-7	SG B(-)IN	28	SG(B) OUT
209-29A	TRACK(A) IN	29	CAPSTAN CURRENT IN
-5V	REG -5V IN	30	REG -5V IN
-12V	REG -12V IN	31	REG -12V IN
	GND	32	GND

C		
	GND	1
+12V	REG +12V IN	2
+5V	REG +5V IN	3
+9V	UNREG +9V IN	4
	—	5
207-6C	PCM Y SWP DELAY IN	6
	—	7
	—	8
	—	9
143-2B	PCM DT SWITCHING PULSE OUT	10
	—	11
	—	12
	—	13
	—	14
207-18B	L:DT OFF OUT	15
	—	16
	—	17
	—	18
	—	19
	—	20
	—	21
	—	22
207-27C	PCM Y SWP TRIG OUT	23
231-3	DT ERROR(G)OUT	24
231-5	SG A(+)IN	25
231-6	SG A(G)IN	26
231-8	SG B(+)IN	27
209-28C	TRACK(B) IN	28
229-4,208-11B,207-11B,206-11B	CAPSTAN FWD/REV IN	29
-5V	REG -5V IN	30
-12V	REG -12V IN	31
	GND	32

| | | |

MB-331; MOTHER BOARD S/N;10001 through 10033

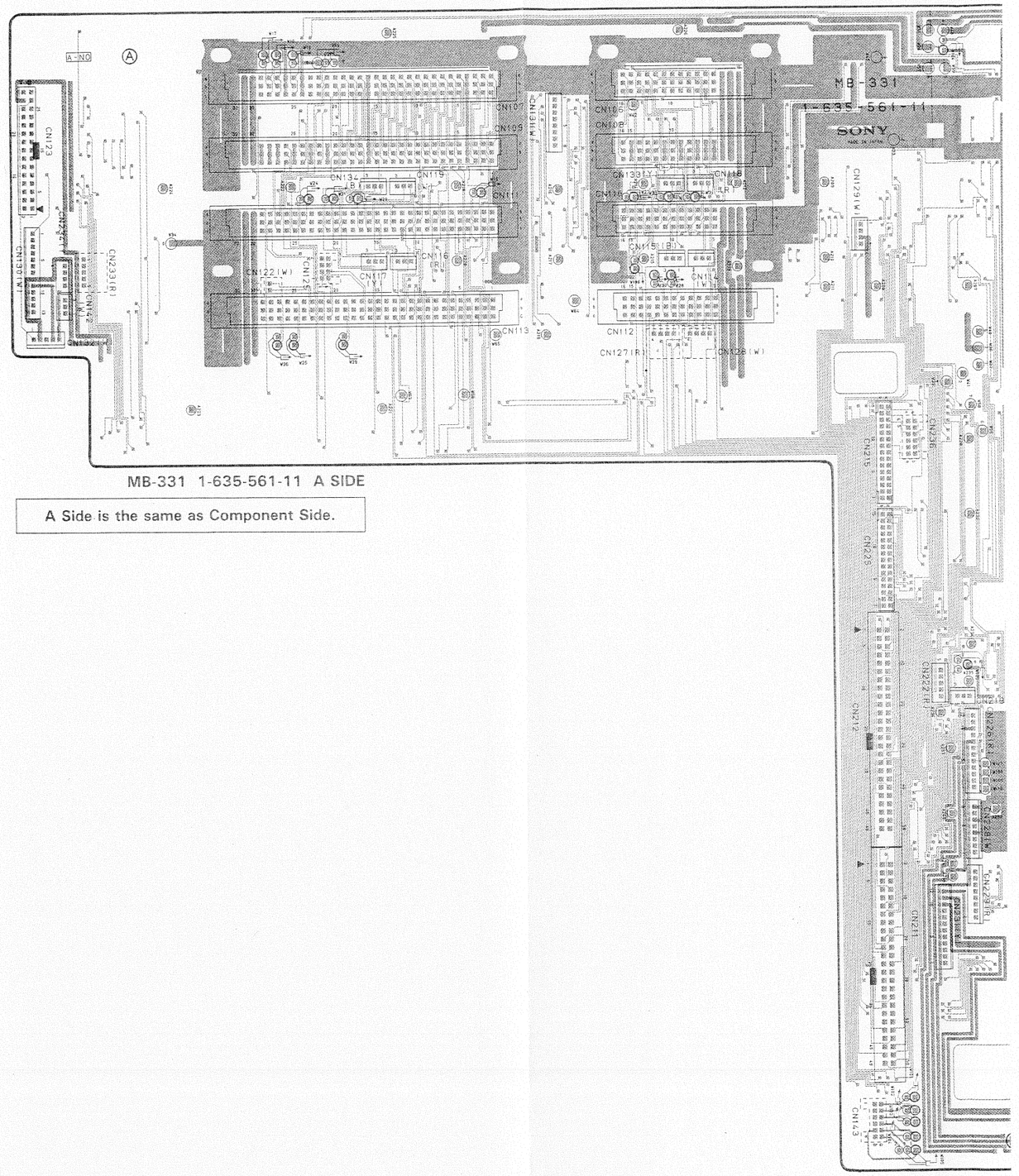

MB-331 1-635-561-11 A SIDE

A Side is the same as Component Side.

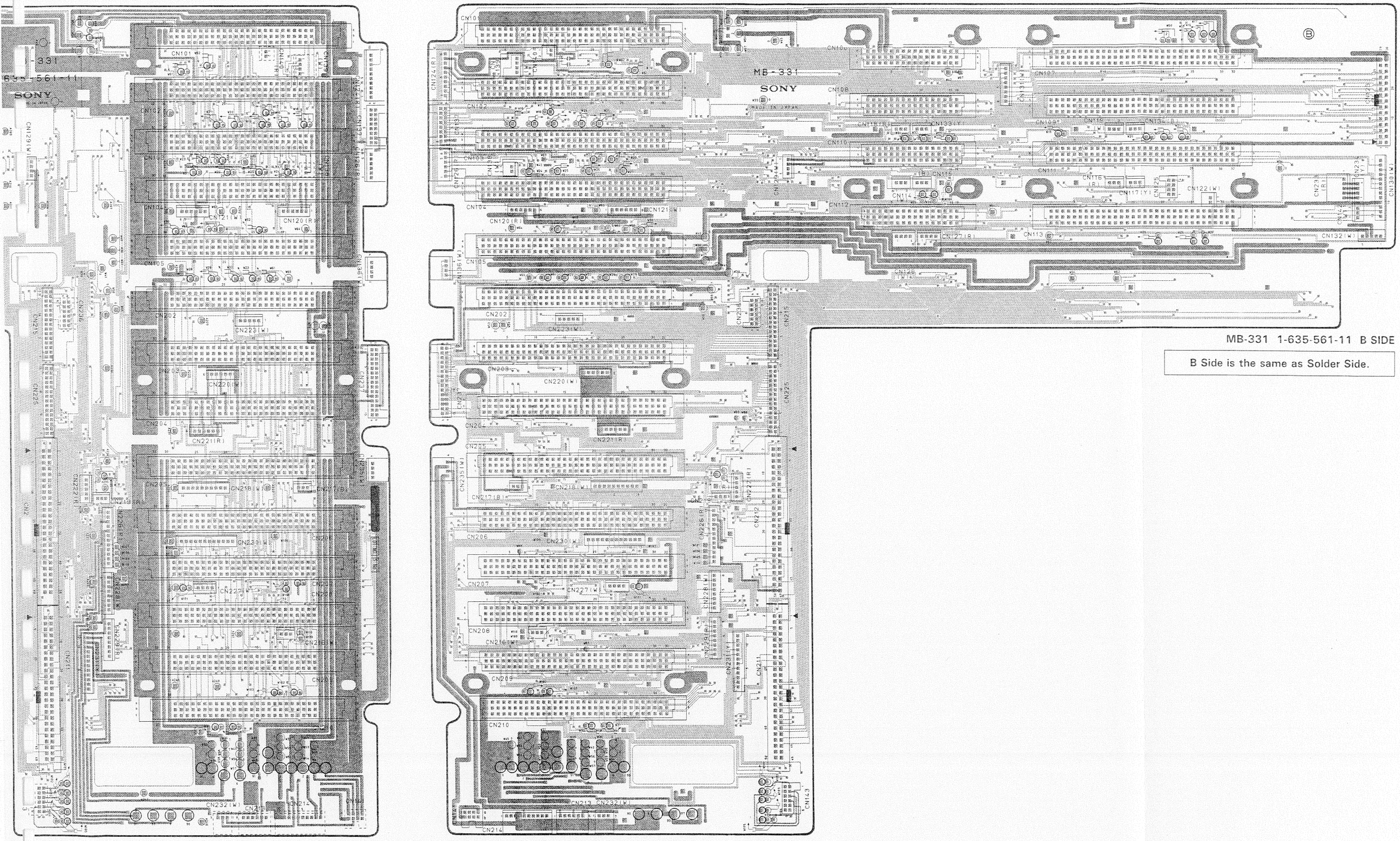

MB-331 1-635-561-11 B SIDE

B Side is the same as Solder Side.

17-797(a)

17-798(a)

MB-331; MOTHER BOARD S/N;10034 and higher

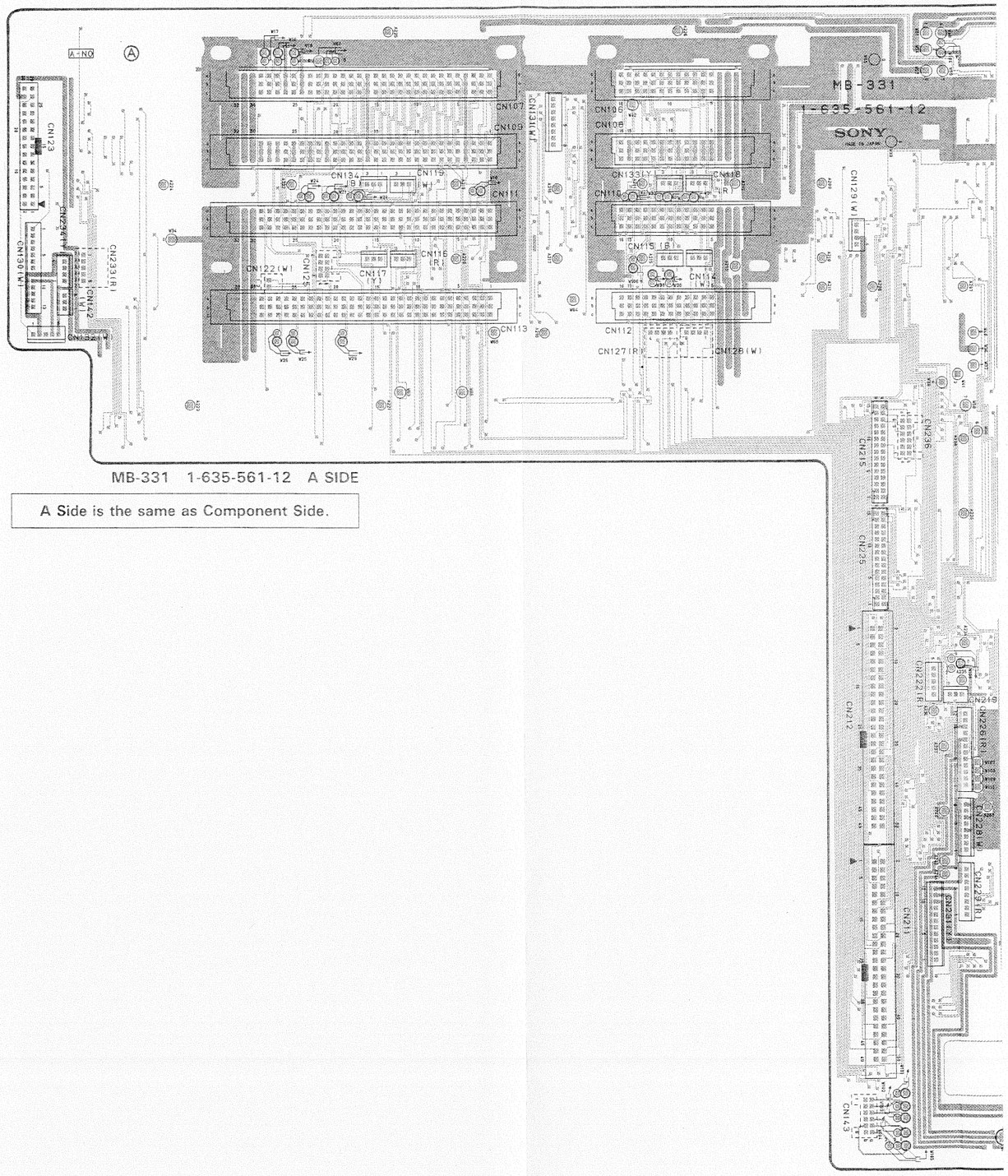

MB-331 1-635-561-12 A SIDE

A Side is the same as Component Side.

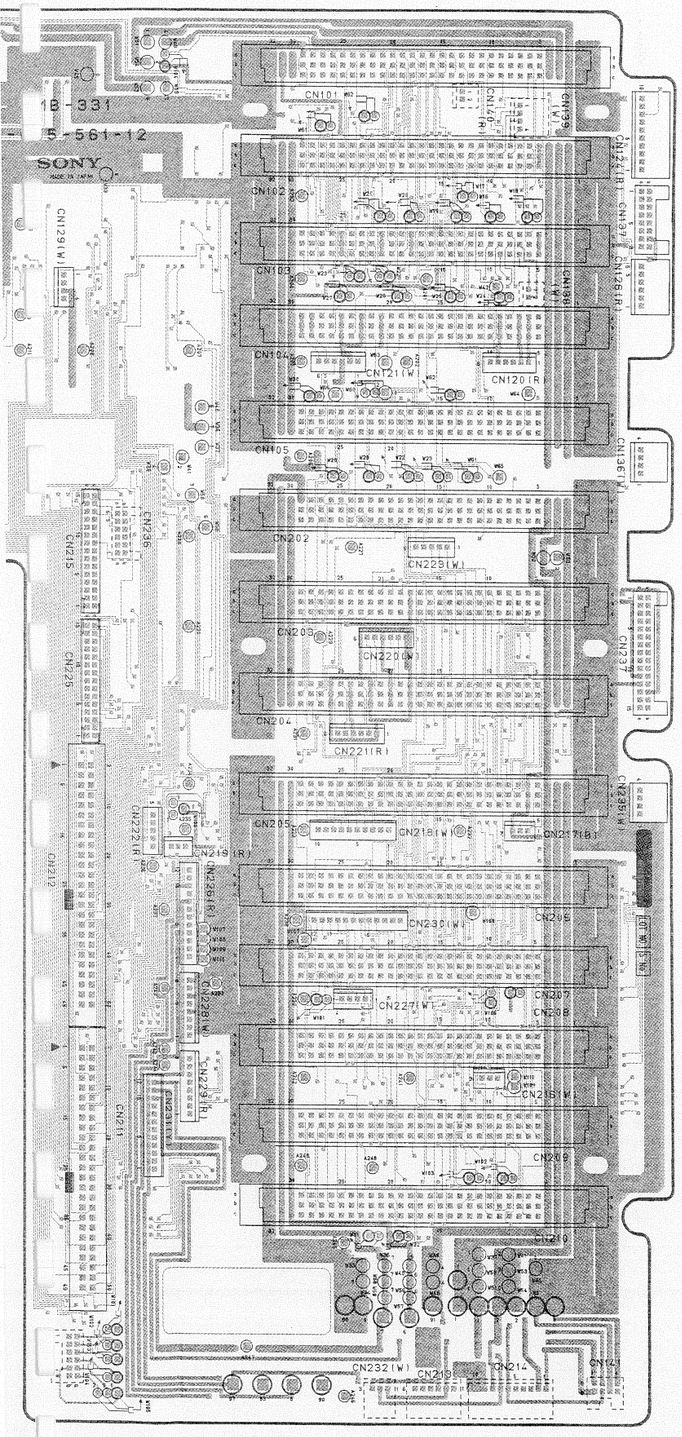

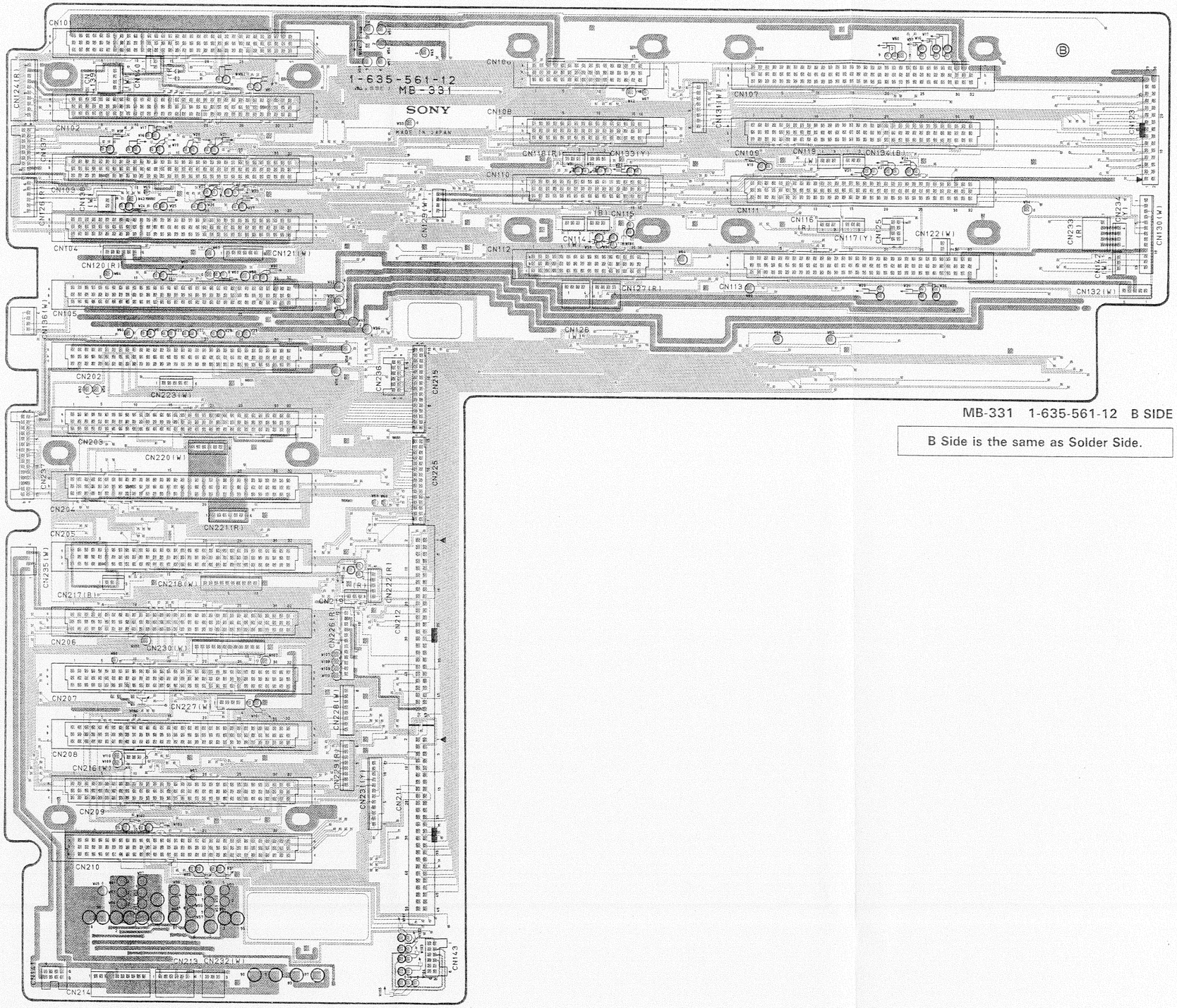

MB-331 1-635-561-12 B SIDE

B Side is the same as Solder Side.

MB-332; MOTHER BOARD

SY-151

CN301

A		B		
GND	1	GND		
REG +12V IN	2	REG +12V IN		+12V
REG +5V IN	3	REG +5V IN		+5V
UNREG +9V IN	4	UNREG +9V IN		+9V
UNREG +14V IN	5	UNREG +14V IN		+14V
UNREG GND	6	UNREG GND		UNREG
	7			
L;EJECT COMMAND IN	8	L;STOP COMMAND IN	306-2	
L;REW COMMAND IN	9	L;PLAY COMMAND IN	306-5	
L;PAUSE COMMAND IN	10	L;PAUSE STATUS-1 IN/OUT	306-8	
L;CUT IN COMMAND IN	11	L;EDIT COMMAND IN	306-11	
L;VIDEO INSERT CMD IN	12	L;AUDIO-1 INSERT CMD IN	306-14	
SEARCH COMMAND A IN	13	SEARCH COMMAND B IN	306-17	
L;STILL TENSION IN	14	H;NORMAL FWD IN	306-20	
L;STANDBY STATUS OUT	15	L;STOP STATUS OUT	306-22	
L;REW STATUS OUT	16	L;PLAY STATUS OUT	306-25	
L;CUT IN STATUS OUT	17	L;TACH OUT	306-28	
L;PAUSE STATUS-2 OUT	18	SPARE	306-31	
L;STANDBY ON STATUS OUT	19	L;NORMAL PLAY STATUS OUT	308-3 ,318-2	
RECEIVE(+)IN/OUT	20	RECEIVE(-)IN/OUT	306-35	
TRANSMIT(+)IN/OUT	21	TRANSMIT(-)IN/OUT	306-38	
TIME CODE GEN INT IN	22	LTC INT IN	303-26A	
L;REMOTE-1 IN	23	L;REMOTE-2 IN	308-6	
	24			
	25			
L;REC INHIBIT IN	26	H;OXIDE REC INHIBIT IN	311-1	
H;LARGE REC INHIBIT IN	27	L;HUMID IN	303-28A	
L;TAPE END IN	28			
KEY SERIAL COMMAND OUT	29	INT KEY SERIAL STATUS IN	304-5A	
	30			
L;CAPSTAN LOCK 4F IN	31	L;CAPSTIN LOCK 2/4F IN	308-9	
	32			

C

GND	1
REG +12V IN	2
REG +5V IN	3
UNREG +9V IN	4
UNREG +14V IN	5
UNREG GND	6
	7
L;F.FWD COMMAND IN	8
L;SEARCH COMMAND IN	9
L;REC COMMAND IN	10
L;CUT OUT COMMAND IN	11
L;AUDIO-2 INSERT CMD IN	12
L;REV COMMAND IN	13
	14
L;F.FWD STATUS OUT	15
L;REC STATUS OUT	16
L;CAPSTAN LOCK OUT	17
CTL OUT	18
L;CASSETTE IN STATUS OUT	19
PRIORITY IN	20
PRIORITY OUT	21
VITC INT IN	22
	23
	24
	25
H;METAL REC INHIBIT IN	26
L;TAPE BEGIN IN	27
	28
EXT KEY SERIAL STATUS IN	29
L;EXT/H;AUTO IN	30
L;CAPSTAN LOCK 8F IN	31
1/2 VD IN	32

CN302

A		B	
H;REC SERIAL REQUEST OUT	1	H;SV/REC READY IN	307-2
SV/REC SERIAL STATUS IN	2	SV/REC SERIAL CLOCK IN	307-5
H;SV SERIAL REQUEST OUT	3		
SV RESET COMMAND OUT	4	TAPE DIRECTION IN	307-8,303-25B
	5		
L;AUDIO NR IN	6	L;AUDIO NR LAMP OUT	307-11
L;LTC LAMP OUT	7	L;AUTO OFF LAMP OUT	307-14
L;FAST/H;AUDIO ATT OUT	8	L;AUDIO MUTE OUT	307-17
H;AFM MUTE OUT	9		
	10		
REF VD IN	11	REF HD IN	307-20
CHARACTER SIGNAL OUT	12	CHARACTER GATE OUT	307-22
	13		
	14		
L;AFM SELECT IN	15	L;PCM SELECT IN	308-25
L;PCM LAMP-1 ON OUT	16	L;PCM LAMP-2 ON OUT	320-4
L;VIDEO/PCM REC OUT	17	L;PCM RE ON OUT	319-4
CONT P-V (X) IN	18		
CONT V-P (X) OUT	19		
	20		
DATA BUS 7 IN/OUT	21	L;EXP RESET OUT	304-21B
DATA BUS 6 IN/OUT	22		
DATA BUS 5 IN/OUT	23		304-23B
DATA BUS 4 IN/OUT	24	ADDRESS BUS 4 OUT	304-24B
DATA BUS 3 IN/OUT	25	ADDRESS BUS 3 OUT	304-25B
DATA BUS 2 IN/OUT	26	ADDRESS BUS 2 OUT	304-26B
DATA BUS 1 IN/OUT	27	ADDRESS BUS 1 OUT	304-27B
DATA BUS 0 IN/OUT	28	ADDRESS BUS 0 OUT	304-28B
UNREG -17V IN	29	UNREG -17V IN	-17V
REG -5V IN	30	REG -5V IN	-5V
REG -12V IN	31	REG -12V IN	-12V
GND	32	GND	

C

SV/REC SERIAL COMMAND OUT	1
	2
	3
EDIT CTL IN	4
	5
L;VITC LAMP OUT	6
H;REC ENABLE OUT	7
L;AUDIO NR ON OUT	8
FAN MOTOR CHECK IN	9
	10
	11
	12
	13
	14
L;PCM EXIST IN	15
H;PCM REC OUT	16
NC	17
L;AUDIO CH-1 MUTE OUT	18
L;PCM LAMP-3 ON OUT	19
	20
L;CS VITC READER OUT	21
L;CS LTC READER OUT	22
L;CS TCG OUT	23
L;CS MECH I/O OUT	24
L;CS TC I/O OUT	25
L;CS VIDEO I/O OUT	26
L;RD OUT	27
L;WR OUT	28
UNREG -17V IN	29
REG -5V IN	30
REG -12V IN	31
GND	32

SY-64P

CN303

A		B		
GND	1	GND		
REG +12V IN	2	REG +12V IN		+12V
REG +5V IN	3	REG +5V IN		+5V
UNREG +9V IN	4	UNREG +9V IN		+9V
UNREG +14V IN	5	UNREG +14V IN		+14V
UNREG GND	6	UNREG GND		UNREG
L;Y IMPACT ERROR INH IN	7	L;C IMPACT ERROR INH IN	308-48	
	8			
GND	9	GND		
GND	10	GND		
TAPE BEGIN SENSOR IN(X)	11	TAPE BEGIN SENSOR IN(G)	313-2	
GND	12	GND		
TAPE END SENSOR IN(X)	13	TAPE END SENSOR IN(G)	309-4	
GND	14	GND		
Y-IMPACT ERROR IN(X)	15	Y-IMPACT ERROR IN(G)	317-2	
C-IMPACT ERROR IN(X)	16	C-IMPACT ERROR IN(G)	317-4	
Y-IMPACT ERROR OUT(X)	17	Y-IMPACT ERROR OUT(G)	317-6	
C-INPACT ERRER OUT(X)	18	C-IMPACT ERROR OUT(G)	317-8	
REF VD IN	19	Y COUNT H IN	308-14	
DT-V	20	L;AFM SEL IN	308-24,302-15A	
H.M. CONTROL T2 OUT	21	H.M. CONTROL T3 OUT	314-3	
VIDEO WITH VITC IN(X)	22	VIDEO WITH VITC IN(G)		
L;EMERGENCY IN	23	INTERPOLATE CTL IN	308-19	
Y SYNC IN	24	SV SYNC IN	308-22	
EDIT CTL IN	25	TAPE DIRECTION IN	307-8,302-4B	
LTC INT OUT	26	VITC INT OUT	301-22C	
VITC OUT	27	H;VITC GATE OUT	308-28	
L;HUMID OUT	28	L;TAPE BEGIN OUT	301-27C	
SV 1 OUT	29	SV 2 OUT	308-31	
H;ADVANCE OFF OUT	30	L;TBC CONFI MODE OUT	308-34	
H;TBC BYPASS ON OUT	31	H;COMB FILTER OFF OUT	308-37	
L;H SHIFT INH OUT	32	L;PCM CH-1 SEL OUT	320-6	

C

GND	1
REG +12V IN	2
REG +5V IN	3
UNREG +9V IN	4
UNREG +14V IN	5
UNREG GND	6
	7
L;EXT.KEY BOARD TEST OUT	8
CONDENSATION SENSOR IN	9
GND	10
GND	11
GND	12
GND	13
GND	14
	15
	16
DL PB V IN	17
1/2 VD IN	18
C COUNT H IN	19
H.M. CONTROL T1 OUT	20
H.M. CONTROL CT OUT	21
L;Y DROPOUT IN	22
L;TIME CODE EXIST IN	23
READER TIME CODE IN	24
TIME CODE GEN INT OUT	25
LTC OUT	26
H;VITC REC OUT	27
L;TAPE END OUT	28
L;REC OUT	29
L;8H ADVANCE OFF OUT	30
H;SERVO REF HOLD OUT	31
L;PCM CH-2 SEL OUT	32

A	
F.FWD MODE OUT	307-23
L;METAL/H;OXIDE	307-26
L;NOISELESS PB O	307-29
L;NON STD/H;STD	307-32
INT KEY SERIAL ST	301-29B
PB B-Y FP1 IN	307-36
DIGITAL DEC CHE	308-41
AUDIO SYSTEM (H	307-40
L;TBC BYPASS OF	307-43
L;CTDM IN	307-46
H;CASSETTE DOWN	315-3
L;LARGE/H;SMALL	315-6
H;L-POSITION IN	311-5
THREAD END IN	307-49,309-5
PINCH SOL STARTE	309-7
POSITION MOTOR(	312-1
POSITION MOTOR(-	312-3
UP/DOWN MOTOR(-	315-10
UP/DOWN MOTOR(+	315-11
L;AFM/SELECT OU	307-48
DATA BUS 7 IN /O	302-21A
DATA BUS 6 IN /O	302-22A
DATA BUS 5 IN /O	302-23A
DATA BUS 4 IN /O	302-24A
DATA BUS 3 IN /O	302-25A
DATA BUS 2 IN /O	302-26A
DATA BUS 1 IN /O	302-27A
DATA BUS 0 IN /O	302-28A
UNREG -17V IN	-17V
REG -5V IN	-5V
REG -12V IN	-12V
GND	

C

H;CHROMA MUTE OU	307-25
H;NORMAL FWD OU	307-28
B-Y ID OUT	307-31
KEY SERIAL COMM	301-29A,310-7
VIDEO OUT 1ST F	307-35
L;VISC EXIST IN	308-47
DEC B-Y FP 2 IN	307-39
L;BH ADVANCE OF	307-42
L;B/W MODE IN	307-45
NC	308-44
H;CASSETTE IN 1	315-5
H;CASSETTE IN 2	315-8
L;METAL/H;OXIDE	311-7
L;CASSETTE LAMP	315-9
CLEANING SOL HOL	309-9
T-BRAKE SOL STAF	312-2
T-BRAKE SOL HOLD	312-4
S-BRAKE SOL STAF	312-5
S-BRAKE SOL HOLD	312-6
L;THICKNESS TAP	311-9
CS VITC READER	302-21C
CS LTC READER IN	302-22C
CS TCG IN	302-23C
CS MECH I/O IN	302-24C
CS TC I/O IN	302-25C
CS VIDEO I/O IN	302-26C
L;RD IN	302-27C
L;WR IN	302-28C
UNREG -17V IN	-17V
REG -5V IN	-5V
REG -12V IN	-12V
GND	

CN308

RM-92.450-1	1	L;EJECT COMMAND IN	301-8A
RM-92.450-2	2	L;STOP COMMAND IN	301-8B
RM-92.450-3	3	L;F.FWD COMMAND IN	301-8C
RM-92.450-4	4	L;REW COMMAND IN	301-9A
RM-92.450-5	5	L;PLAY COMMAND IN	301-9B
RM-92.450-6	6	L;SEARCH COMMAND IN	301-9C
RM-92.450-7	7	L;PAUSE COMMAND IN	301-10A
RM-92.450-8	8	L;PAUSE STATUS-1 IN/OUT	301-10B
RM-92.450-9	9	L;REC COMMAND IN	301-10C
RM-92.450-10	10	L;CUT IN COMMAND IN	301-11A
RM-92.450-11	11	L;EDIT COMMAND IN	301-11B
RM-92.450-12	12	L;CUT OUT COMMAND IN	301-11C
RM-92.450-13	13	L;VIDEO INSERT CMD IN	301-12A
RM-92.450-14	14	L;AUDIO-1 INSERT CMD IN	301-12B
RM-92.450-15	15	L;AUDIO-2 INSERT CMD IN	301-12C
RM-92.450-16	16	SEARCH COMMAND A IN	301-13A
RM-92.450-17	17	SEARCH COMMAND B IN	301-13B
RM-92.450-18	18	L;REV COMMAND IN	301-13C
RM-92.450-19	19	L;STILL TENSION IN	301-14A
RM-92.450-20	20	H;NORMAL FWD IN	301-14B
RM-92.450-21	21	L;STANDBY STATUS OUT	301-15A
RM-92.450-22	22	L;STOP STATUS OUT	301-15B
RM-92.450-23	23	L;F.FWD STATUS OUT	301-15C
RM-92.450-24	24	L;REW STATUS OUT	301-16A
RM-92.450-25	25	L;PLAY STATUS OUT	301-16B
RM-92.450-26	26	L;REC STATUS OUT	301-16C
RM-92.450-27	27	L;CUT IN STATUS OUT	301-17A
RM-92.450-28	28	L;TACH OUT	301-17B
RM-92.450-29	29	L;CAPSTAN LOCK OUT	301-17C
RM-92.450-30	30	L;PAUSE STATUS-2 OUT	301-18A
RM-92.450-31	31	SPARE	301-18B
RM-92.450-32	32	CTL OUT	301-18C
RM-92.450-33	33	SYNCHRONIZE IN	308-1
RM-92.450-34	34	RECEIVE(+)IN/OUT	301-20A
RM-92.450-35	35	RECEIVE(-)IN/OUT	301-20B
RM-92.450-36	36	PRIORITY IN	301-20C
RM-92.450-37	37	TRANSMIT(+)IN/OUT	301-21A
RM-92.450-38	38	TRANSMIT(-)IN/OUT	301-21B
RM-92.450-39	39	PRIORITY OUT	301-21C
RM-92.450-40	40	FAN MOTOR CHECK IN	302-9C

CN307

MB-331.211-1	1	H;REC SERIAL REQUEST OUT	302-1A
MB-331.211-2	2	H;SV/REC READY IN	302-1B
MB-331.211-3	3	SV/REC SERIAL COMMAND OUT	302-1C
MB-331.211-4	4	SV/REC SERIAL STATUS IN	302-2A
MB-331.211-5	5	SV/REC SERIAL CLOCK IN	302-2B
MB-331.211-6	6	H;SV SERIAL REQUEST OUT	302-3A
MB-331.211-7	7	SV RESET COMMAND OUT	302-4A
MB-331.211-8	8	TAPE DIRECTION IN	302-4B,303-25B
MB-331.211-9	9	EDIT CTL IN	302-4C,303-25A
MB-331.211-10	10	L;AUDIO NR IN	302-6A
MB-331.211-11	11	L;AUDIO NR LAMP OUT	302-6B
MB-331.211-12	12	L;VITC LAMP OUT	302-6C
MB-331.211-13	13	L;LTC LAMP OUT	302-7A
MB-331.211-14	14	L;AUTO OFF LAMP OUT	302-7B
MB-331.211-15	15	H;REC ENABLE OUT	302-7C
MB-331.211-16	16	L;FAST/H;AUDIO ATT OUT	302-8A
MB-331.211-17	17	L;AUDIO MUTE OUT	302-8B
MB-331.211-18	18	L;AUDIO NR ON OUT	302-8C
MB-331.211-19	19	H;AFM MUTE OUT	302-9A
MB-331.211-20	20	REF HD IN	302-11B
MB-331.211-21	21	CHARACTER SIGNAL OUT	302-12A
MB-331.211-22	22	CHARACTER GATE OUT	302-12B
MB-331.211-23	23	H;F.FWD MODE OUT	304-1A
MB-331.211-24	24	H;REW MODE OUT	304-1B
MB-331.211-25	25	H;CHROMA MUTE OUT	304-1C
MB-331.211-26	26	L;METAL/H;OXIDE OUT	304-2A
MB-331.211-27	27	L;DT HEADH;RP HEAD OUT	304-2B
MB-331.211-28	28	H;NORMAL FWD OUT	304-2C
MB-331.211-29	29	L;NOISELESS PB OUT	304-3A
MB-331.211-30	30	NC	303-16C
MB-331.211-31	31	B-Y ID OUT	304-3C
MB-331.211-32	32	L;NON STD/H;STD OUT	304-4A
MB-331.211-33	33	H;IN PHASE OUT	304-4B
MB-331.211-34	34	REF FIRST FIELD IN	304-5B
MB-331.211-35	35	VIDEO OUT 1ST FIELD IN	304-5C
MB-331.211-36	36	PB B-Y FP1 IN	304-6A
MB-331.211-37	37	PB B-Y FP2 IN	304-6B
MB-331.211-38	38	DEC B-Y FP1 IN	304-7B
MB-331.211-39	39	DEC B-Y FP2 IN	304-7C
MB-331.211-40	40	AUDIO SYSTEM (H;PCM)IN	304-8A
MB-331.211-41	41	H;EXT SYNC DET IN	304-8B
MB-331.211-42	42	L;8H ADVANCE OFF IN	304-8C
MB-331.211-43	43	L;TBC BYPASS OFF IN	304-9A
MB-331.211-44	44	L;PLAYER BVW-10 IN	304-9B
MB-331.211-45	45	L;B/W MODE IN	304-9C
MB-331.211-46	46	L;CTDM IN	304-10A
MB-331.211-47	47	L;T-R B IN	304-10B
MB-331.211-48	48	L;ATM/SELECT OUT	304-20A
MB-331.211-49	49	L;THREAD END OUT	304-14A,309-5
MB-331.211-50	50	L;THREADUNTHREAD END OUT	304-14B,309-6

CN309

MB-331.212-1	1	SYNCHRONIZE OUT	306-33
MB-331.212-2	2	L;STANDBY ON STATUS OUT	301-19A,318-1
MB-331.212-3	3	L;NORMAL PLAY STATUS OUT	301-19B,318-2
MB-331.212-4	4	L;CASSETTE IN STATUS OUT	301-19C,318-3
MB-331.212-5	5	L;REMOTE-1 IN	301-23A
MB-331.212-6	6	L;REMOTE-2 IN	301-23B
MB-331.212-7	7	L;REC INHIBIT IN	301-29A
MB-331.212-8	8	CAPSTAN LOCK 4F IN	301-31A
MB-331.212-9	9	CAPSTAN LOCK 2/4F IN	301-31B
MB-331.212-10	10	CAPSTAN LOCK 8F IN	301-31C
MB-331.212-11	11	L;EXT/H;AUTO IN	301-30C
MB-331.212-12	12	1/2 VD IN	301-32C,303-18C
MB-331.212-13	13	REF VD IN	302-11A,303-19A
MB-331.212-14	14	Y COUNT H IN	303-19B
MB-331.212-15	15	C COUNT H IN	303-19C
MB-331.212-16	16	VIDEO WITH VITC IN	303-22A
MB-331.212-17	17	L;Y DROPOUT IN	303-22C
MB-331.212-18	18	L;EMERGENCY IN	303-23A
MB-331.212-19	19	INTERPOLATE CTL IN	303-23B
MB-331.212-20	20	L;TIME CODE EXIST IN	303-23C
MB-331.212-21	21	Y SYNC IN	303-24A
MB-331.212-22	22	SV SYNC IN	303-24B
MB-331.212-23	23	READER TIME CODE IN	303-24C
MB-331.212-24	24	L;AFM SEL IN	303-26B,302-15A
MB-331.212-25	25	L;PCM SELECT IN	302-15B
MB-331.212-26	26	LTC OUT	303-26C
MB-331.212-27	27	VITC OUT	303-27A
MB-331.212-28	28	H;VITC GATE OUT	303-27B
MB-331.212-29	29	[illegible]	[illegible]

A B C D E F G H

MB-332

SY 151

SY-64P

CN302

A		B	
307-1	H;REC SERIAL REQUEST OUT	1	H;SV/REC READY IN	307-2
307-4	SV/REC SERIAL STATUS IN	2	SV/REC SERIAL CLOCK IN	307-5
307-6	H;SV SERIAL REQUEST OUT	3	——	
307-7	SV RESET COMMAND OUT	4	TAPE DIRECTION IN	307-8,303-25B
	——	5	——	
307-10	L;AUDIO NR IN	6	L;AUDIO NR LAMP OUT	307-11
307-13	L;LTC LAMP OUT	7	L;AUTO OFF LAMP OUT	307-14
307-16	L;FAST/H;AUDIO ATT OUT	8	L;AUDIO MUTE OUT	307-17
307-19	H;AFM MUTE OUT	9	——	
	——	10	——	
303-19A,308-13	REF VD IN	11	REF HD IN	307-20
307-21	CHARACTER SIGNAL OUT	12	CHARACTER GATE OUT	307-22
	——	13	——	
	——	14	——	
303-20B,308-24	L;AFM SELECT IN	15	L;PCM SELECT IN	308-25
320-3	L;PCM LAMP-1 ON OUT	16	L;PCM LAMP-2 ON OUT	320-4
319-3	L;VIDEO/PCM REC OUT	17	L;PCM RE ON OUT	319-4
320-1	CONT P-V (X) IN	18	——	
320-2	CONT V-P (X) OUT	19	——	
	——	20	——	
304-21A	DATA BUS 7 IN/OUT	21	L;EXP RESET OUT	304-21B
304-22A	DATA BUS 6 IN/OUT	22	——	
304-23A	DATA BUS 5 IN/OUT	23	——	304-23B
304-24A	DATA BUS 4 IN/OUT	24	ADDRESS BUS 4 OUT	304-24B
304-25A	DATA BUS 3 IN/OUT	25	ADDRESS BUS 3 OUT	304-25B
304-26A	DATA BUS 2 IN/OUT	26	ADDRESS BUS 2 OUT	304-26B
304-27A	DATA BUS 1 IN/OUT	27	ADDRESS BUS 1 OUT	304-27B
304-28A	DATA BUS 0 IN/OUT	28	ADDRESS BUS 0 OUT	304-28B
-17V	UNREG -17V IN	29	UNREG -17V IN	-17V
-5V	REG -5V IN	30	REG -5V IN	-5V
-12V	REG -12V IN	31	REG -12V IN	-12V
	GND	32	GND	

C

307-3	SV/REC SERIAL COMMAND OUT	1
	——	2
	——	3
307-9,303-25A	EDIT CTL IN	4
	——	5
307-12	L;VITC LAMP OUT	6
307-15	H;REC ENABLE OUT	7
307-18	L;AUDIO NR ON OUT	8
308-40	FAN MOTOR CHECK IN	9
	——	10
	——	11
	——	12
	——	13
	——	14
319-1	L;PCM EXIST IN	15
319-2	H;PCM REC OUT	16
319-5	NC	17
308-45	L;AUDIO CH-1 MUTE OUT	18
320-5	L;PCM LAMP-3 ON OUT	19
	——	20
304-21C	L;CS VITC READER OUT	21
304-22C	L;CS LTC READER OUT	22
304-23C	L;CS TCG OUT	23
304-24C	L;CS MECH I/O OUT	24
304-25C	L;CS TC I/O OUT	25
304-26C	L;CS VIDEO I/O OUT	26
304-27C	L;RD OUT	27
304-28C	L;WR OUT	28
-17V	UNREG -17V IN	29
-5V	REG -5V IN	30
-12V	REG -12V IN	31
	GND	32

CN303

A		B	
	GND	1	GND	
+12V	REG +12V IN	2	REG +12V IN	+12V
+5V	REG +5V IN	3	REG +5V IN	+5V
+9V	UNREG +9V IN	4	UNREG +9V IN	+9V
+14V	UNREG +14V IN	5	UNREG +14V IN	+14V
UNREG	UNREG GND	6	UNREG GND	UNREG
308-39	L;Y IMPACT ERROR INH IN	7	L;C IMPACT ERROR INH IN	308-48
	——	8	——	
	GND	9	GND	
	GND	10	GND	
313-1	TAPE BEGIN SENSOR IN(X)	11	TAPE BEGIN SENSOR IN(G)	313-2
	GND	12	GND	
309-3	TAPE END SENSOR IN(X)	13	TAPE END SENSOR IN(G)	309-4
	GND	14	GND	
317-1	Y-IMPACT ERROR IN(X)	15	Y-IMPACT ERROR IN(G)	317-2
317-3	C-IMPACT ERROR IN(X)	16	C-IMPACT ERROR IN(G)	317-4
317-5	Y-IMPACT ERROR OUT(X)	17	Y-IMPACT ERROR OUT(G)	317-6
317-7	C-INPACT ERRER OUT(X)	18	C-IMPACT ERROR OUT(G)	317-8
308-13,302-11A	REF VD IN	19	Y COUNT H IN	308-14
308-42	DT-V	20	L;AFM SEL IN	308-24,302-15A
314-2	H.M. CONTROL T2 OUT	21	H.M. CONTROL T3 OUT	314-3
308-16	VIDEO WITH VITC IN(X)	22	VIDEO WITH VITC IN(G)	
308-18	L;EMERGENCY IN	23	INTERPOLATE CTL IN	308-19
308-21	Y SYNC IN	24	SV SYNC IN	308-22
307-8,302-4C	EDIT CTL IN	25	TAPE DIRECTION IN	307-8,302-4B
301-22B	LTC INT OUT	26	VITC INT OUT	301-22C
308-27	VITC OUT	27	H;VITC GATE OUT	308-28
301-27B	L;HUMID OUT	28	L;TAPE BEGIN OUT	301-27C
308-30	SV 1 OUT	29	SV 2 OUT	308-31
308-33	H;ADVANCE OFF OUT	30	L;TBC CONFI MODE OUT	308-34
308-36	H;TBC BYPASS ON OUT	31	H;COMB FILTER OFF OUT	308-37
308-46	L;H SHIFT INH OUT	32	L;PCM CH-1 SEL OUT	320-6

C

	GND	1
+12V	REG +12V IN	2
+5V	REG +5V IN	3
+9V	UNREG +9V IN	4
+14V	UNREG +14V IN	5
UNREG	UNREG GND	6
	——	7
310-9	L;EXT.KEY BOARD TEST OUT	8
311-4	CONDENSATION SENSOR IN	9
	GND	10
	GND	11
	GND	12
	GND	13
	GND	14
	——	15
307-30	——	16
308-40	DL PB V IN	17
308-12,301-32C	1/2 VD IN	18
308-15	C COUNT H IN	19
314-1	H.M. CONTROL T1 OUT	20
314-4	H.M. CONTROL CT OUT	21
308-17	L;Y DROPOUT IN	22
308-20	L;TIME CODE EXIST IN	23
308-23	READER TIME CODE IN	24
301-22A	TIME CODE GEN INT OUT	25
308-26	LTC OUT	26
308-29	H;VITC REC OUT	27
301-28A	L;TAPE END OUT	28
308-32	L;REC OUT	29
308-35	L;8H ADVANCE OFF OUT	30
308-38	H;SERVO REF HOLD OUT	31
320-7	L;PCM CH-2 SEL OUT	32

CN304

A		B	
307-23	H;F.FWD MODE OUT	1	H;REW MODE OUT	307-24
307-26	L;METAL/H;OXIDE OUT	2	L;DT HEAD/H;RP HEAD OUT	307-27
307-29	L;NOISELESS PB OUT	3	L;AUDIO CH-2 SEL OUT	320-8
307-32	L;NON STD/H;STD OUT	4	H;IN PHASE OUT	307-33
301-29B	INT KEY SERIAL STATUS OUT	5	REF FIRST FIELD IN	307-34
307-36	PB B-Y FP1 IN	6	PB B-Y FP2 IN	307-37
308-41	DIGITAL DEC CHECK IN	7	DEC B-Y FP 1 IN	307-38
307-40	AUDIO SYSTEM (H:PCM)IN	8	H;EXT SYNC DET IN	307-41
307-43	L;TBC BYPASS OFF IN	9	L;PLAYER BVW-10 IN	307-44
307-46	L;CTDM IN	10	L;Y-R.B IN	307-47
315-3	H;CASSETTE DOWN 1 IN	11	H;CASSETTE DOWN 2 IN	315-4
315-6	L;LARGE/H;SMALL IN	12	L;COMPATMENT EXIST IN	315-7
311-5	H;L-POSITION IN	13	H;S-POSITION IN	311-6
307-48,309-5	THREAD END IN	14	THREAD/UNTHREAD END IN	309-6,307-50
309-7	PINCH SOL STARTER OUT	15	PINCH SOL HOLDER OUT	309-8
312-1	POSITION MOTOR(-) OUT	16	POSITION MOTOR(-) OUT	312-1
312-3	POSITION MOTOR(+) OUT	17	POSITION MOTOR(+) OUT	312-3
315-10	UP/DOWN MOTOR(-)OUT	18	UP/DOWN MOTOR(-)OUT	315-10
315-11	UP/DOWN MOTOR(+)OUT	19	UP/DOWN MOTOR(+)OUT	315-11
307-48	L;AFM/SELECT OUT	20	L;LARGE HUB IN	311-8
302-21A	DATA BUS 7 IN /OUT	21	L;EXP RESET IN	302-21B
302-22A	DATA BUS 6 IN /OUT	22	H;AUTO STEREO OUT	308-43
302-23A	DATA BUS 5 IN /OUT	23	——	302-23B
302-24A	DATA BUS 4 IN /OUT	24	ADDRESS BUS 4 IN	302-24B
302-25A	DATA BUS 3 IN /OUT	25	ADDRESS BUS 3 IN	302-25B
302-26A	DATA BUS 2 IN /OUT	26	ADDRESS BUS 2 IN	302-26B
302-27A	DATA BUS 1 IN /OUT	27	ADDRESS BUS 1 IN	302-27B
302-28A	DATA BUS 0 IN /OUT	28	ADDRESS BUS 0 IN	302-28B
-17V	UNREG -17V IN	29	UNREG -17V IN	-17V
-5V	REG -5V IN	30	REG -5V IN	-5V
-12V	REG -12V IN	31	REG -12V IN	-12V
	GND	32	GND	

C

307-25	H;CHROMA MUTE OUT	1
307-28	H;NORMAL FWD OUT	2
307-31	B-Y ID OUT	3
301-29A,310-7	KEY SERIAL COMMAND IN	4
307-35	VIDEO OUT 1ST FIELD IN	5
308-47	L;VISC EXIST IN	6
307-39	DEC B-Y FP 2 IN	7
307-42	L;8H ADVANCE OFF IN	8
307-45	L;B/W MODE IN	9
308-44	NC	10
315-5	H;CASSETTE IN 1 IN	11
315-8	H;CASSETTE IN 2 IN	12
311-7	L;METAL/H;OXIDE IN	13
315-9	L;CASSETTE LAMP ON OUT	14
309-9	CLEANING SOL HOLDER OUT	15
312-2	T-BRAKE SOL STARTER OUT	16
312-4	T-BRAKE SOL HOLDER OUT	17
312-5	S-BRAKE SOL STARTER OUT	18
312-6	S-BRAKE SOL HOLDER OUT	19
311-9	L;THICKNESS TAPE IN	20
302-21C	CS VITC READER IN	21
302-22C	CS LTC READER IN	22
302-23C	CS TCG IN	23
302-24C	CS MECH I/O IN	24
302-25C	CS TC I/O IN	25
302-26C	CS VIDEO I/O IN	26
302-27C	L;RD IN	27
302-28C	L;WR IN	28
-17V	UNREG -17V IN	29
-5V	REG -5V IN	30
-12V	REG -12V IN	31
	GND	32

CN309 (W)

+5V	REG +5V OUT	1	PTC-15,871-4
	GND	2	PTC-15,871-2
303-13A	TAPE END SENSOR IN (X)	3	PD-35,854-1
303-13B	TAPE END SENSOR IN (G)	4	PD-35,854-2
307-49	304-14A L;THREAD END IN	5	PTC-15,871-3
307-50	304-14B L;THREAD/UNTHREAD END IN	6	PTC-15,871-1
	304-15A PINCH SOL STARTER OUT	7	PD-35,854-4
	304-15B PINCH SOL HOLDER OUT	8	PD-35,854-5
	304-15C CLEANING SOL HOLDER OUT	9	PD-35,854-6
+14V	UNREG +14V OUT	10	PD-35,854-3

CN310

UNREG	UNREG GND	1	EXT.KEYBOARD
	UNREG GND	2	EXT.KEYBOARD
	UNREG GND	3	EXT.KEYBOARD
+9V	UNREG +9V OUT	4	EXT.KEYBOARD
	UNREG +9V OUT	5	EXT.KEYBOARD
	UNREG +9V OUT	6	EXT.KEYBOARD
301-29A,304-4C	KEY SERIAL COMMAND OUT	7	EXT.KEYBOARD
301-29C	EXT.KEY SERIAL STATUS IN	8	EXT.KEYBOARD
303-8C	L;EXT KEY BOARD TEST OUT	9	EXT.KEYBOARD
——	——	10	EXT.KEYBOARD

CN311 (Y)

301-26B	H;OXIDE REC INHIBIT IN	1	RE-28,820-9
301-26C	H;METAL REC INHIBIT IN	2	RE-28,820-10
301-27A	H;LARGE REC INHIBIT IN	3	RE-28,820-11
303-9C	CONDENSATION SENSOR IN	4	RE-28,820-1
304-13A	H;L-POSITION IN	5	RE-28,820-5
304-13B	H;S-POSITION IN	6	RE-28,820-4
304-13C	L;METAL/H;OXIDE IN	7	RE-28,820-7
304-20B	L;LARGE HUB IN	8	RE-28,820-6
304-20C	L;THICKNESS TAPE IN	9	RE-28,820-8
	GND	10	RE-28,820-3
+5V	REG +5V OUT	11	RE-28,820-2
——	——	12	

CN312 (W)

304-16A ,16B	POSITION MOTOR(-) OUT	1	RE-36,803-5
304-16C	T-BRAKE SOL STARTER OUT	2	RE-36,803-3
304-17A ,17B	POSITION MOTOR(+) OUT	3	RE-36,803-6
304-17C	T-BRAKE SOL HOLDER OUT	4	RE-36,803-4
304-18C	S-BRAKE SOL STARTER OUT	5	RE-36,803-2
304-19C	S-BRAKE SOL HOLDER OUT	6	RE-36,803-1

CN313 (W)

303-11A	TAPE BEGIN SENSOR IN(X)	1	TAPE BEGIN SENSOR
303-11B	TAPE BEGIN SENSOR IN(G)	2	TAPE BEGIN SENSOR

CN314 (R)

303-20C	H.M. CONTROL T1 OUT	1	HC-11,461-2
303-21A	H.M. CONTROL T2 OUT	2	HC-11,461-3
303-21B	H.M. CONTROL T3 OUT	3	HC-11,461-5
303-21C	H.M. CONTROL CT OUT	4	HC-11,461-6
+5V	REG +5V OUT	5	HC-11,461-4
	GND	6	HC-11,461-1

CN315 (R)

	GND	1	CL-14,331-5
+12V	REG +12V OUT	2	CL-14,331-4
304-11A	H;CASSETTE DOWN 1 IN	3	CL-14,331-7
304-11B	H;CASSETTE DOWN 2 IN	4	CL-14,331-8
304-11C	H;CASSETTE IN 1 IN	5	CL-14,331-2
304-12A	L;LARGE/H;SMALL IN	6	CL-14,331-1
304-12B	L;COMPARTMENT EXIST	7	CL-14,331-6
304-12C	H;CASSETTE IN 2 IN	8	CL-14,331-3
304-14C	L;CASSETTE LAMP ON OUT	9	CL-14,331-9
304-18A,18B	UP/DOWN MOTOR(-)OUT	10	CL-14,331-11
304-19A,19B	UP/DOWN MOTOR(+)OUT	11	CL-14,331-12
UNREG	UNREG GND	12	CL-14,331-10

CN316 (W)

-12V	REG -12V IN	1	MB-288,214-1
-5V	REG -5V IN	2	MB-288,214-2
UNREG	UNREG GND	3	MB-288,214-3
UNREG	UNREG GND	4	MB-288,214-4
+14V	UNREG +14V IN	5	MB-288,214-5
+9V	UNREG +9V IN	6	MB-288,214-6
+5V	REG +5V IN	7	MB-288,214-7
+12V	REG +12V IN	8	MB-288,214-8
	GND	9	MB-288,214-9
	GND	10	MB-288,214-10

CN317 (R)

303-15A	Y-IMPACT ERROR IN (X)	1	MB-288,131-1
303-15B	Y-IMPACT ERROR IN (G)	2	MB-288,131-2
303-16A	C-IMPACT ERROR IN (X)	3	MB-288,131-5
303-16B	C-IMPACT ERROR IN (G)	4	MB-288,131-6
303-17A	Y-IMPACT ERROR OUT (X)	5	MB-288,131-3
303-17B	Y-IMPACT ERROR OUT (G)	6	MB-288,131-4
303-18A	C-IMPACT ERROR OUT (X)	7	MB-288,131-7
303-18B	C-IMPACT ERROR OUT (G)	8	MB-288,131-8

CN307

MB-331,211-1	H;REC SERIAL REQUEST OUT	302-1A
MB-331,211-2	H;SV/REC READY IN	302-1B
MB-331,211-3	SV/REC SERIAL COMMAND OUT	302-1C
MB-331,211-4	SV/REC SERIAL STATUS IN	302-2A
MB-331,211-5	SV/REC SERIAL CLOCK IN	302-2B
MB-331,211-6	H;SV SERIAL REQUEST OUT	302-3A
MB-331,211-7	SV RESET COMMAND OUT	302-4A
MB-331,211-8	TAPE DIRECTION IN	302-4B,303-25B
MB-331,211-9	EDIT CTL IN	302-4C,303-25A
MB-331,211-10	L;AUDIO NR IN	302-6A
MB-331,211-11	L;AUDIO NR LAMP OUT	302-6B
MB-331,211-12	L;VITC LAMP OUT	302-6C
MB-331,211-13	L;LTC LAMP OUT	302-7A
MB-331,211-14	L;AUTO OFF LAMP OUT	302-7B
MB-331,211-15	H;REC ENABLE OUT	302-7C
MB-331,211-16	L;FAST/H;AUDIO ATT OUT	302-8A
MB-331,211-17	L;AUDIO MUTE OUT	302-8B
MB-331,211-18	L;AUDIO NR ON OUT	302-8C
MB-331,211-19	H;AFM MUTE OUT	302-9A
MB-331,211-20	REF HD IN	302-11B
MB-331,211-21	CHARACTER SIGNAL OUT	302-12A
MB-331,211-22	CHARACTER GATE OUT	302-12B
MB-331,211-23	H;F.FWD MODE OUT	304-1A
MB-331,211-24	H;REW MODE OUT	304-1B
MB-331,211-25	H;CHROMA MUTE OUT	304-1C
MB-331,211-26	L;METAL/H;OXIDE OUT	304-2A
MB-331,211-27	L;DT HEAD/H;RP HEAD OUT	304-2B
MB-331,211-28	H;NORMAL FWD OUT	304-2C
MB-331,211-29	L;NOISELESS PB OUT	304-3A
MB-331,211-30	NC	304-3C
MB-331,211-31	B-Y ID OUT	304-3C
MB-331,211-32	L;NON STD/H;STD OUT	304-4A
MB-331,211-33	H;IN PHASE OUT	304-4B
MB-331,211-34	REF FIRST FIELD IN	304-5B
MB-331,211-35	VIDEO OUT 1ST FIELD IN	304-5C
MB-331,211-36	PB B-Y FP1 IN	304-6A
MB-331,211-37	PB B-Y FP2 IN	304-6B
MB-331,211-38	DEC B-Y FP1 IN	304-7B
MB-331,211-39	DEC B-Y FP2 IN	304-7C
MB-331,211-40	AUDIO SYSTEM (H:PCM)IN	304-8A
MB-331,211-41	H;EXT SYNC DET IN	304-8B
MB-331,211-42	L;8H ADVANCE OFF IN	304-8C
MB-331,211-43	L;TBC BYPASS OFF IN	304-9A
MB-331,211-45	L;B/W MODE IN	304-9B
MB-331,211-46	L;CTDM IN	304-9C
MB-331,211-47	L;Y-R B IN	304-10A
MB-331,211-48	L;AFM/SELECT OUT	304-10B
MB-331,211-49	L;THREAD END OUT	304-20A
MB-331,211-50	L;THREAD/UNTHREAD END OUT	304-14A,309-5
		304-14B,309-6

CN308

MB-331,212-1	SYNCHRONIZE OUT	306-33
MB-331,212-2	L;STANDBY ON STATUS OUT	301-19A,318-1
MB-331,212-3	L;NORMAL PLAY STATUS OUT	301-19B,318-2
MB-331,212-4	L;CASSETTE IN STATUS OUT	301-19C,318-3
MB-331,212-5	L;REMOTE-1 IN	301-23A
MB-331,212-6	L;REMOTE-2 IN	301-23B
MB-331,212-7	L;REC INHIBIT IN	301-26A
MB-331,212-8	CAPSTAN LOCK 4F IN	301-31A
MB-331,212-9	CAPSTAN LOCK 2/4F IN	301-31B
MB-331,212-10	CAPSTAN LOCK 8F IN	301-31C
MB-331,212-11	L;EXT/H;AUTO IN	301-32C,303-18C
MB-331,212-12	1/2 VD IN	301-11A,303-19A
MB-331,212-13	REF VD IN	303-19B
MB-331,212-14	Y COUNT H IN	303-19C
MB-331,212-15	C COUNT H IN	303-22A
MB-331,212-16	VIDEO WITH VITC IN	303-22C
MB-331,212-17	L;Y DROPOUT IN	303-23A
MB-331,212-18	L;EMERGENCY IN	303-23B
MB-331,212-19	INTERPOLATE CTL IN	303-23C
MB-331,212-20	L;TIME CODE EXIST IN	303-24A
MB-331,212-21	Y SYNC IN	303-24B
MB-331,212-22	SV SYNC IN	303-24C
MB-331,212-23	READER TIME CODE IN	303-209,302-15A
MB-331,212-24	L;AFM SEL IN	303-15B
MB-331,212-25	L;PCM SELECT IN	303-26C
MB-331,212-26	LTC OUT	303-27A
MB-331,212-27	VITC OUT	303-27B
MB-331,212-28	H;VITC GATE OUT	303-27C
MB-331,212-29	H;VITC REC OUT	303-28A
MB-331,212-30	SV 1 OUT	303-29A
MB-331,212-31	SV 2 OUT	303-29B
MB-331,212-32	L;REC OUT	303-29C
MB-331,212-33	H;ADVANCE OFF OUT	303-30A
MB-331,212-34	L;TBC CONFI MODE OUT	303-30B
MB-331,212-35	L;8H ADVANCE OFF OUT	303-30C
MB-331,212-36	H;TBC BYPASS ON OUT	303-31A
MB-331,212-37	H;COMB FILTER OFF OUT	303-31B
MB-331,212-38	H;SERVO REF HOLD OUT	303-31C
MB-331,212-39	L;Y IMPACT ERROR INH IN	303-7A
MB-331,212-40	DL PB V IN	303-17C
MB-331,212-41	DIGITAL DEC CHECK IN	304-7A
MB-331,212-42	DT V IN	303-20A
MB-331,212-43	H;AUTO STEREO OUT	304-22B
MB-331,212-44	NC	304-10C
MB-331,212-45	L;AUDIO CH-1 MUTE OUT	302-16C
MB-331,212-46	L;H SHIFT INH OUT	303-32A
MB-331,212-47	L;VISC EXIST IN	304-6C
MB-331,212-48	L;C IMPACT ERROR INH IN	303-7B
MB-331,212-49	UNREG -17V IN	-17V
MB-331,212-50	UNREG -17V IN	

CN320 (R)

CP-153,482-3	1	CONT P-V (X) IN	302-18A
CP-153,483-1	2	CONT V-P (X) OUT	302-18A
CP-153,484-1	3	L;PCM LAMP-1 OUT	302-16A
CP-153,484-2	4	L;PCM LAMP-2 OUT	302-16B
CP-153,484-3	5	L;PCM LAMP-3 OUT	302-19C
CP-154,475-2	6	L;PCM CH-1 SEL OUT	303-32B
CP-154,475-1	7	L;PCM CH-2 SEL OUT	303-32C
CP-154,475-3	8	L;AUDIO CH-2 SEL OUT	304-3B

CN319 (B)

RP-46,973-1	1	L;PCM EXIST IN	302-15C
RP-46,973-2	2	H;PCM REC OUT	302-16C
RP-46,973-3	3	L;VIDEO/PCM REC OUT	302-17A
RP-46,973-4	4	L;PCM RE ON OUT	302-17B
RP-46,973-5	5	NC	302-17C

CN318 (W)

NC	1	L;STANDBY ON STATUS OUT	301-19A,308-2
NC	2	L;NORMAL PLAY STATUS OUT	301-19B,308-3
NC	3	L;CASSETTE IN STATUS OUT	301-19C,308-4

RM-92,450-36 36 PRIORITY IN 301-20C
RM-92,450-37 37 /ANSWIT A
RM-92,450-38 38 L;TRANSMIT/-IN/OUT 301-21B
RM-92,450-39 39 PRIORITY OUT 301-21C
RM-92,450-40 40 FAN MOTOR CHECK IN 302-9C

MB-332 BOARD

BOARD NO.1-635-562-11

BVW-85P(EK) ; 10001-

E F G H I J K L

1 2 3 4 5

MB-322; MOTHER BOARD

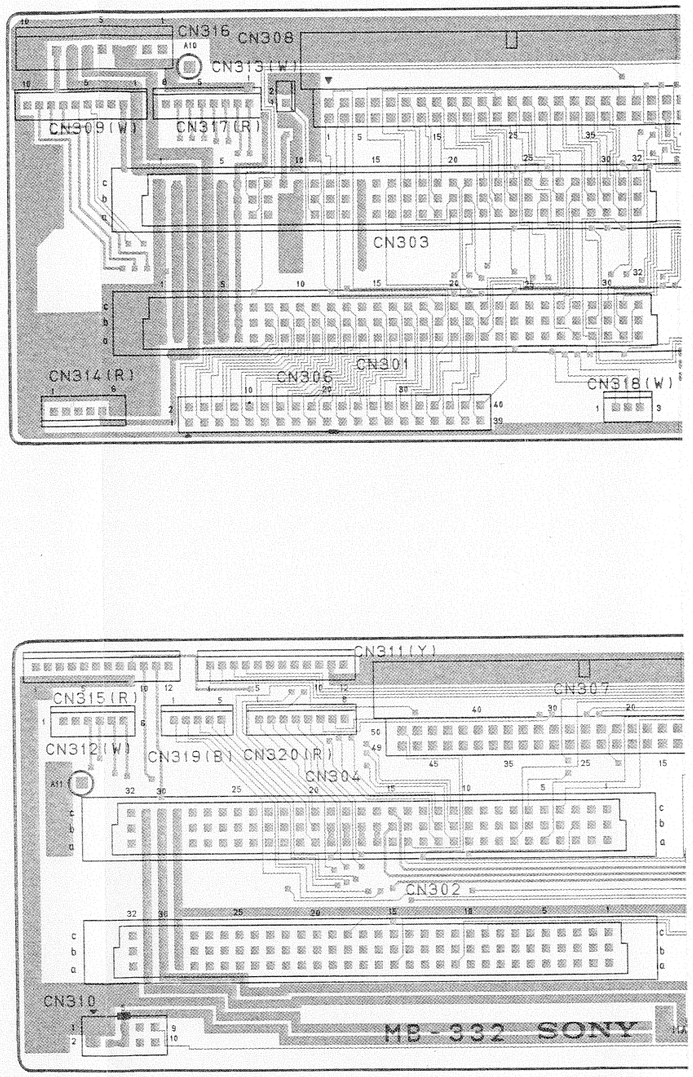

MB-332

MB-322; MOTHER BOARD

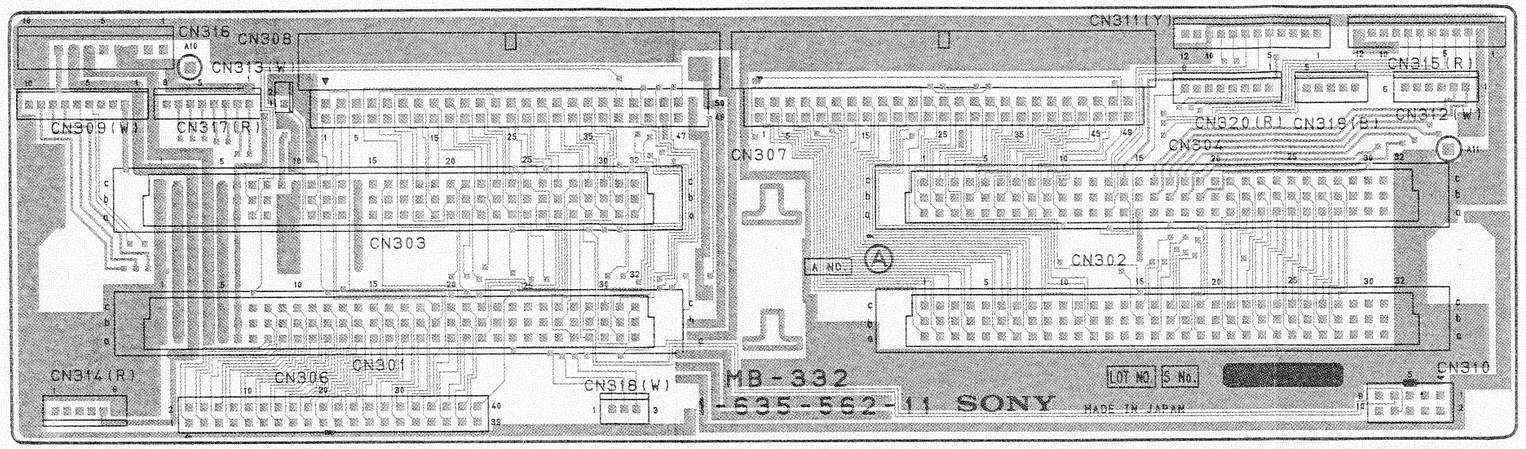

MB-332 1-635-562-11 A SIDE

A Side is the same as Component Side.

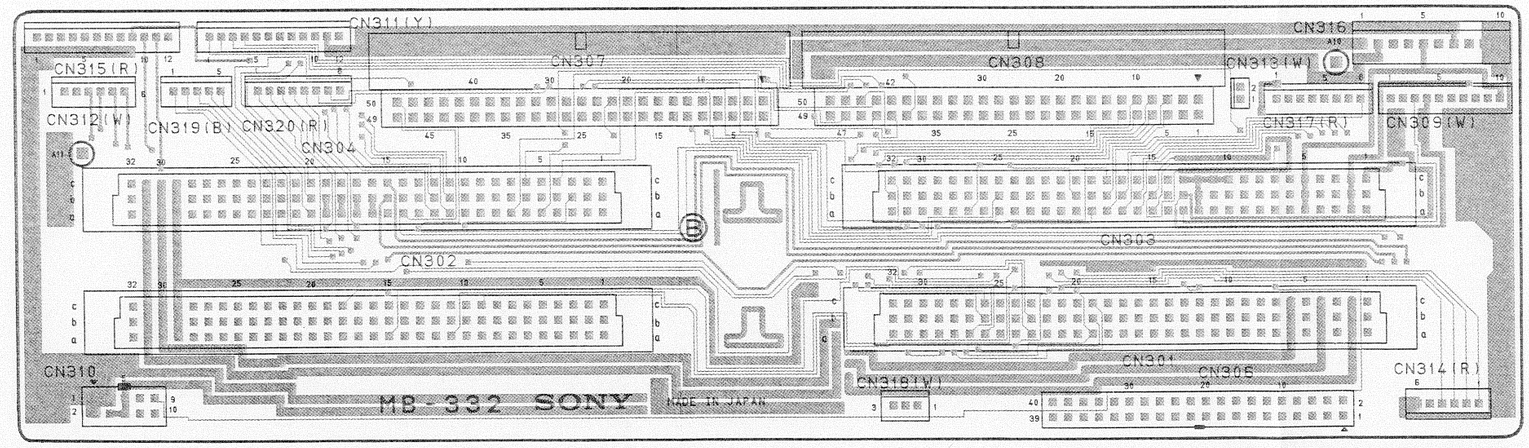

MB-332 1-635-562-11 B SIDE

B Side is the same as Solder Side.

FRAME(1/5) FRAME(1/5)

FRAME (1/5)

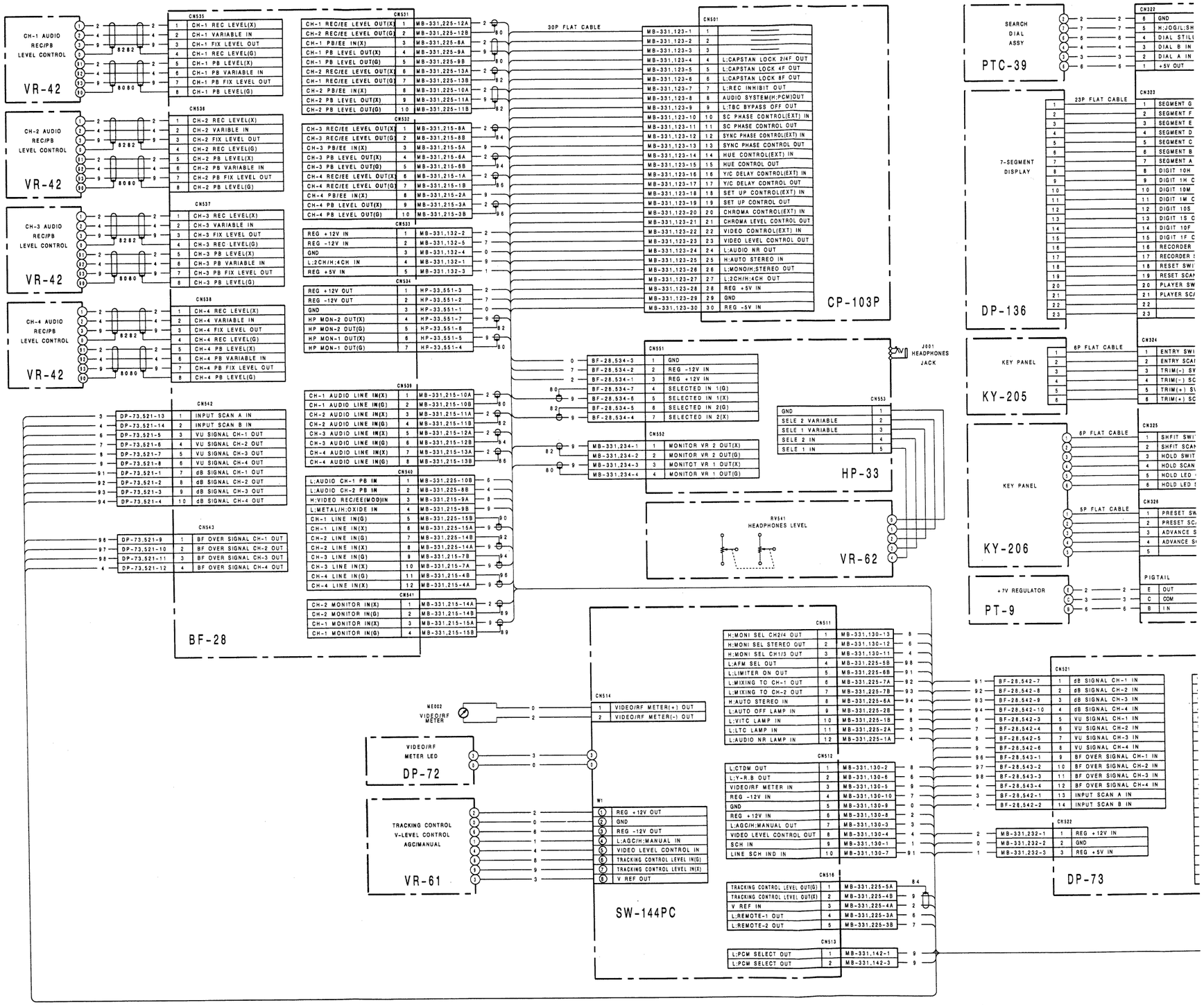

17-815

17-816

A B C D E F G H

FRAME(1/5)

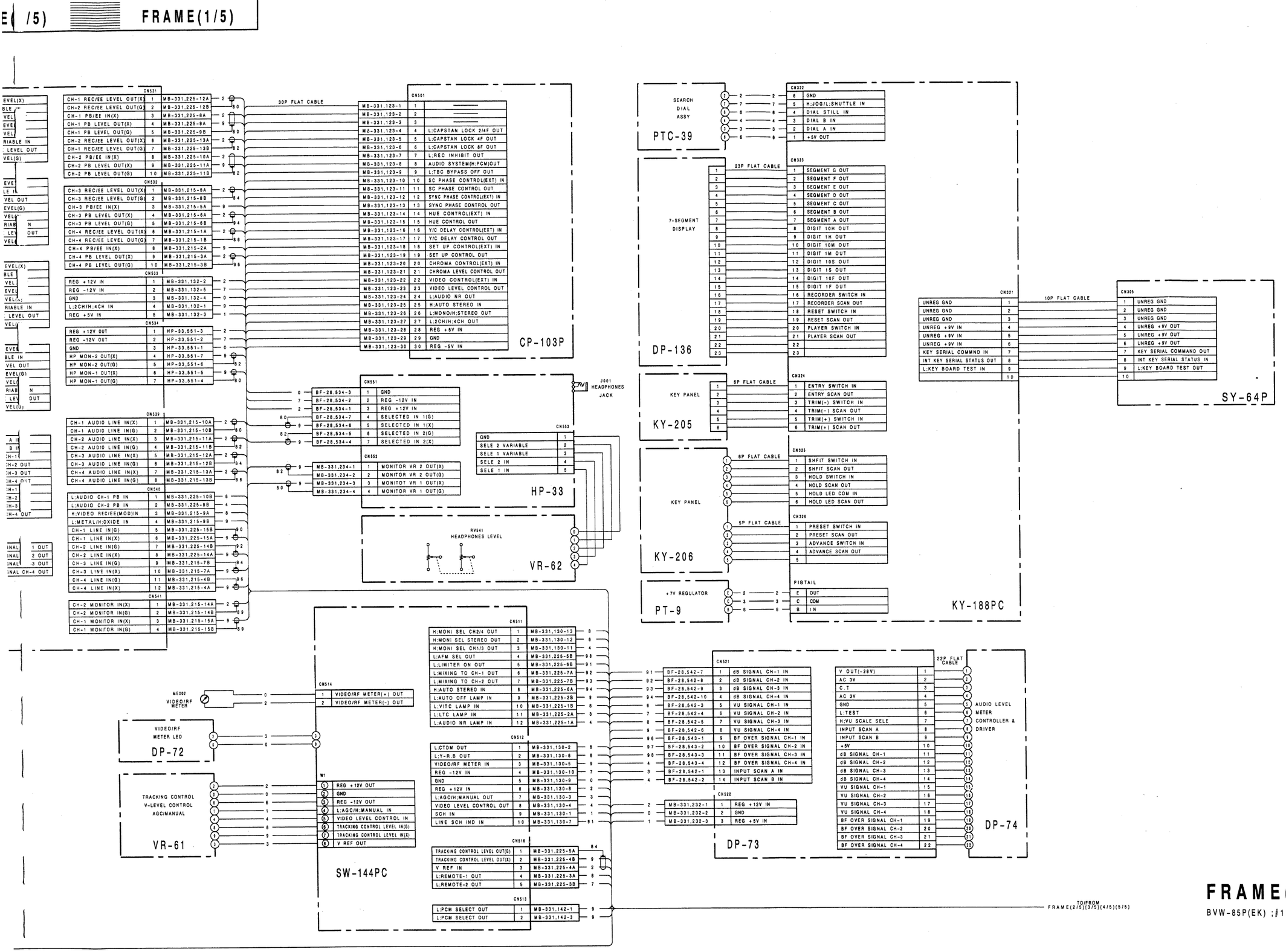

FRAME(1/5)

BVW-85P(EK) ;#10001-

17-816

17-817

FRAME(2/5) FRAME(2/5)

FRAME (2/5)

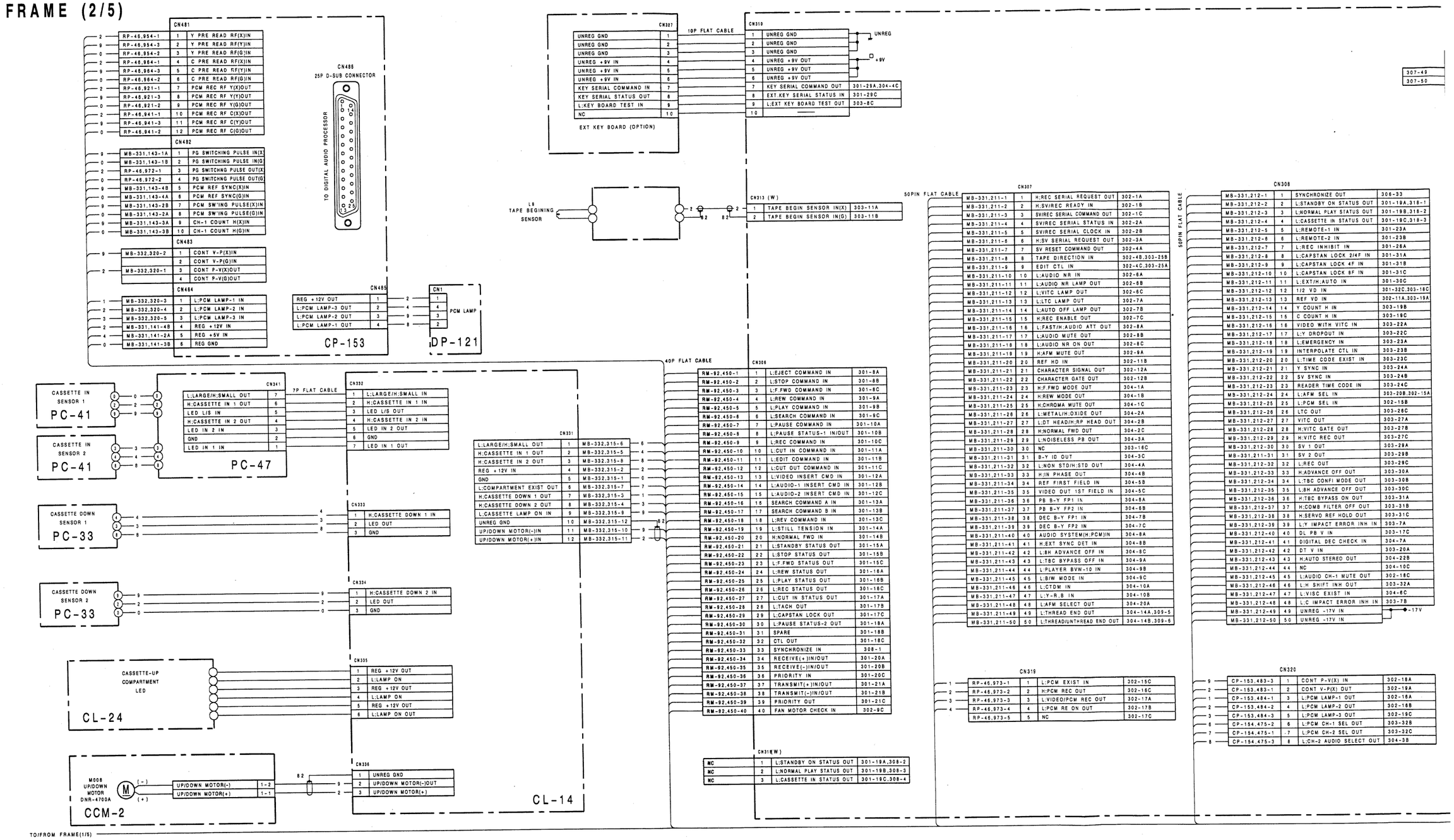

FRAME(2/5)

CN327

G GN	1	
G GN	2	
G GN	3	
G +... N	4	
G +9V IN	5	
G +9V IN	6	
SERI...COMMAND IN	7	
SER...STATUS OUT	8	
Y BC...TEST IN	9	
	10	

10P FLAT CABLE

CN310

1	UNREG GND	→ UNREG
2	UNREG GND	
3	UNREG GND	
4	UNREG +9V OUT	→ +9V
5	UNREG +9V OUT	
6	UNREG +9V OUT	
7	KEY SERIAL COMMAND OUT	301-29A,304-4C
8	EXT.KEY SERIAL STATUS IN	301-29C
9	L:EXT KEY BOARD TEST OUT	303-8C
10		

KEY BOARD (OPTION)

CN313 (W)

1	TAPE BEGIN SENSOR IN(X)	303-11A
2	TAPE BEGIN SENSOR IN(G)	303-11B

40P FLAT CABLE

CN306

RM-92.450-1	1	L:EJECT COMMAND IN	301-8A
RM-92.450-2	2	L:STOP COMMAND IN	301-8B
RM-92.450-3	3	L:F.FWD COMMAND IN	301-8C
RM-92.450-4	4	L:REW COMMAND IN	301-9A
RM-92.450-5	5	L:PLAY COMMAND IN	301-9B
RM-92.450-6	6	L:SEARCH COMMAND IN	301-9C
RM-92.450-7	7	L:PAUSE COMMAND IN	301-10A
RM-92.450-8	8	L:PAUSE STATUS-1 IN/OUT	301-10B
RM-92.450-9	9	L:REC COMMAND IN	301-10C
RM-92.450-10	10	L:CUT IN COMMAND IN	301-11A
RM-92.450-11	11	L:EDIT COMMAND IN	301-11B
RM-92.450-12	12	L:CUT OUT COMMAND IN	301-11C
RM-92.450-13	13	L:VIDEO INSERT CMD IN	301-12A
RM-92.450-14	14	L:AUDIO-1 INSERT CMD IN	301-12B
RM-92.450-15	15	L:AUDIO-2 INSERT CMD IN	301-12C
RM-92.450-16	16	SEARCH COMMAND A IN	301-13A
RM-92.450-17	17	SEARCH COMMAND B IN	301-13B
RM-92.450-18	18	L:REV COMMAND IN	301-13C
RM-92.450-19	19	L:STILL TENSION IN	301-14A
RM-92.450-20	20	H:NORMAL FWD IN	301-14B
RM-92.450-21	21	L:STANDBY STATUS OUT	301-15A
RM-92.450-22	22	L:STOP STATUS OUT	301-15B
RM-92.450-23	23	L:F.FWD STATUS OUT	301-15C
RM-92.450-24	24	L:REW STATUS OUT	301-16A
RM-92.450-25	25	L:PLAY STATUS OUT	301-16B
RM-92.450-26	26	L:REC STATUS OUT	301-16C
RM-92.450-27	27	L:CUT IN STATUS OUT	301-17A
RM-92.450-28	28	L:TACH OUT	301-17B
RM-92.450-29	29	L:CAPSTAN LOCK OUT	301-17C
RM-92.450-30	30	L:PAUSE STATUS-2 OUT	301-18A
RM-92.450-31	31	SPARE	301-18B
RM-92.450-32	32	CTL OUT	301-18C
RM-92.450-33	33	SYNCHRONIZE IN	308-1
RM-92.450-34	34	RECEIVE(+)IN/OUT	301-20A
RM-92.450-35	35	RECEIVE(-)IN/OUT	301-20B
RM-92.450-36	36	PRIORITY IN	301-20C
RM-92.450-37	37	TRANSMIT(+)IN/OUT	301-21A
RM-92.450-38	38	TRANSMIT(-)IN/OUT	301-21B
RM-92.450-39	39	PRIORITY OUT	301-21C
RM-92.450-40	40	FAN MOTOR CHECK IN	302-9C

CN318(W)

NC	1	L:STANDBY ON STATUS OUT	301-19A,308-2
NC	2	L:NORMAL PLAY STATUS OUT	301-19B,308-3
NC	3	L:CASSETTE IN STATUS OUT	301-19C,308-4

50PIN FLAT CABLE

CN307

MB-331,211-1	1	H:REC SERIAL REQUEST OUT	302-1A
MB-331,211-2	2	H:SVIREC READY IN	302-1B
MB-331,211-3	3	SVIREC SERIAL COMMAND OUT	302-1C
MB-331,211-4	4	SVIREC SERIAL STATUS IN	302-2A
MB-331,211-5	5	SVIREC SERIAL CLOCK IN	302-2B
MB-331,211-6	6	H:SV SERIAL REQUEST OUT	302-3A
MB-331,211-7	7	SV RESET COMMAND OUT	302-4A
MB-331,211-8	8	TAPE DIRECTION IN	302-4B,303-25B
MB-331,211-9	9	EDIT CTL IN	302-4C,303-25A
MB-331,211-10	10	L:AUDIO NR IN	302-6A
MB-331,211-11	11	L:AUDIO NR LAMP OUT	302-6B
MB-331,211-12	12	L:VITC LAMP OUT	302-6C
MB-331,211-13	13	L:LTC LAMP OUT	302-7A
MB-331,211-14	14	L:AUTO OFF LAMP OUT	302-7B
MB-331,211-15	15	H:REC ENABLE OUT	302-7C
MB-331,211-16	16	L:FAST/H:AUDIO ATT OUT	302-8A
MB-331,211-17	17	L:AUDIO MUTE OUT	302-8B
MB-331,211-18	18	L:AUDIO NR ON OUT	302-8C
MB-331,211-19	19	H:AFM MUTE OUT	302-9A
MB-331,211-20	20	REF HD IN	302-11B
MB-331,211-21	21	CHARACTER SIGNAL OUT	302-12A
MB-331,211-22	22	CHARACTER GATE OUT	302-12B
MB-331,211-23	23	H:F.FWD MODE OUT	304-1A
MB-331,211-24	24	H:REW MODE OUT	304-1B
MB-331,211-25	25	H:CHROMA MUTE OUT	304-1C
MB-331,211-26	26	L:METAL/H:OXIDE OUT	304-2A
MB-331,211-27	27	L:DT HEAD/H:RP HEAD OUT	304-2B
MB-331,211-28	28	H:NORMAL FWD OUT	304-2C
MB-331,211-29	29	L:NOISELESS PB OUT	304-3A
MB-331,211-30	30	NC	303-16C
MB-331,211-31	31	B-Y ID OUT	304-3C
MB-331,211-32	32	L:NON STD/H:STD OUT	304-4A
MB-331,211-33	33	H:IN PHASE OUT	304-4B
MB-331,211-34	34	REF FIRST FIELD IN	304-5B
MB-331,211-35	35	VIDEO OUT 1ST FIELD IN	304-5C
MB-331,211-36	36	PB B-Y FP1 IN	304-8A
MB-331,211-37	37	PB B-Y FP2 IN	304-6B
MB-331,211-38	38	DEC B-Y FP1 IN	304-7B
MB-331,211-39	39	DEC B-Y FP2 IN	304-7C
MB-331,211-40	40	AUDIO SYSTEM(H:PCM)IN	304-8A
MB-331,211-41	41	H:EXT SYNC DET IN	304-8B
MB-331,211-42	42	L:8H ADVANCE OFF IN	304-8C
MB-331,211-43	43	L:TBC BYPASS OFF IN	304-9A
MB-331,211-44	44	L:PLAYER BVW-10 IN	304-9B
MB-331,211-45	45	L:B/W MODE IN	304-9C
MB-331,211-46	46	L:CTDM IN	304-10A
MB-331,211-47	47	L:Y-R,B IN	304-10B
MB-331,211-48	48	L:AFM SELECT OUT	304-20A
MB-331,211-49	49	L:THREAD END OUT	304-14A,309-5
MB-331,211-50	50	L:THREAD/UNTHREAD END OUT	304-14B,309-6

CN319

RP-46,973-1	1	L:PCM EXIST IN	302-15C
RP-46,973-2	2	H:PCM REC OUT	302-16C
RP-46,973-3	3	L:VIDEO/PCM REC OUT	302-17A
RP-46,973-4	4	L:PCM RE ON OUT	302-17B
RP-46,973-5	5	NC	302-17C

50PIN FLAT CABLE

CN308

MB-331,212-1	1	SYNCHRONIZE OUT	306-33
MB-331,212-2	2	L:STANDBY ON STATUS OUT	301-19A,318-1
MB-331,212-3	3	L:NORMAL PLAY STATUS OUT	301-19B,318-2
MB-331,212-4	4	L:CASSETTE IN STATUS OUT	301-19C,318-3
MB-331,212-5	5	L:REMOTE-1 IN	301-23A
MB-331,212-6	6	L:REMOTE-2 IN	301-23B
MB-331,212-7	7	L:REC INHIBIT IN	301-26A
MB-331,212-8	8	L:CAPSTAN LOCK 2/4F IN	301-31A
MB-331,212-9	9	L:CAPSTAN LOCK 4F IN	301-31B
MB-331,212-10	10	L:CAPSTAN LOCK 8F IN	301-31C
MB-331,212-11	11	L:EXT/H:AUTO IN	301-30C
MB-331,212-12	12	1/2 VD IN	301-32C,303-16C
MB-331,212-13	13	REF VD IN	302-11A,303-19A
MB-331,212-14	14	Y COUNT H IN	303-19B
MB-331,212-15	15	C COUNT H IN	303-19C
MB-331,212-16	16	VIDEO WITH VITC IN	303-22A
MB-331,212-17	17	L:Y DROPOUT IN	303-22C
MB-331,212-18	18	L:EMERGENCY IN	303-23A
MB-331,212-19	19	INTERPOLATE CTL IN	303-23B
MB-331,212-20	20	L:TIME CODE EXIST IN	303-23C
MB-331,212-21	21	Y SYNC IN	303-24A
MB-331,212-22	22	SV SYNC IN	303-24B
MB-331,212-23	23	READER TIME CODE IN	303-24C
MB-331,212-24	24	L:AFM SEL IN	303-26B,302-15A
MB-331,212-25	25	L:PCM SEL IN	302-15B
MB-331,212-26	26	LTC OUT	303-28C
MB-331,212-27	27	VITC OUT	303-27A
MB-331,212-28	28	H:VITC GATE OUT	303-27B
MB-331,212-29	29	H:VITC REC OUT	303-27C
MB-331,212-30	30	SV 1 OUT	303-29A
MB-331,212-31	31	SV 2 OUT	303-29B
MB-331,212-32	32	L:REC OUT	303-29C
MB-331,212-33	33	H:ADVANCE OFF OUT	303-30A
MB-331,212-34	34	L:TBC CONFI MODE OUT	303-30B
MB-331,212-35	35	L:8H ADVANCE OFF OUT	303-30C
MB-331,212-36	36	H:TBC BYPASS ON OUT	303-31A
MB-331,212-37	37	H:COMB FILTER OFF OUT	303-31B
MB-331,212-38	38	H:SERVO REF HOLD OUT	303-31C
MB-331,212-39	39	L:Y IMPACT ERROR INH IN	303-7A
MB-331,212-40	40	DL PB V IN	303-17C
MB-331,212-41	41	DIGITAL DEC CHECK IN	304-7A
MB-331,212-42	42	DT V IN	303-20A
MB-331,212-43	43	H:AUTO STEREO OUT	304-22B
MB-331,212-44	44	NC	304-10C
MB-331,212-45	45	L:AUDIO CH-1 MUTE OUT	302-18C
MB-331,212-46	46	L:H SHIFT INH OUT	303-32A
MB-331,212-47	47	L:VISC EXIST IN	304-6C
MB-331,212-48	48	L:C IMPACT ERROR INH IN	303-7B
MB-331,212-49	49	UNREG -17V IN	→ -17V
MB-331,212-50	50	UNREG -17V IN	

CN320

CP-153,483-3	1	CONT P-V(X) IN	302-18A
CP-153,483-1	2	CONT V-P(X) OUT	302-19A
CP-153,484-1	3	L:PCM LAMP-1 OUT	302-18A
CP-153,484-2	4	L:PCM LAMP-2 OUT	302-18B
CP-153,484-3	5	L:PCM LAMP-3 OUT	302-19C
CP-154,475-2	6	L:PCM CH-1 SEL OUT	303-32B
CP-154,475-1	7	L:PCM CH-2 SEL OUT	303-32C
CP-154,475-3	8	L:CH-2 AUDIO SELECT OUT	304-3B

CN309

+5V	REG +5V OUT	1	PTC-15,871-4	1
	GND	2	PTC-15,871-2	0
303-13A	TAPE END SENSOR IN(X)	3	PD-35,854-1	9
303-13B	TAPE END SENSOR IN(G)	4	PD-35,854-2	8 2
307-49 304-14A	L:THREAD END IN	5	PTC-15,871-3	3
307-50 304-14B	L:THREAD/UNTHREAD END IN	6	PTC-15,871-1	4
304-15A	PINCH SOL STARTER OUT	7	PD-35,854-4	5
304-15B	PINCH SOL HOLDER OUT	8	PD-35,854-5	6
304-15C	CLEANING SOL HOLDER OUT	9	PD-35,854-6	7
+14V	UNREG +14V OUT	10	PD-35,854-3	2

CN311

301-26B	H:OXIDE REC INHIBIT IN	1	RE-28,820-9	1
301-26C	H:METAL REC INHIBIT IN	2	RE-28,820-10	2
301-27A	H:LARGE REC INHIBIT IN	3	RE-28,820-11	3
303-9C	CONDENSATION SENSOR IN	4	RE-28,820-1	4
304-13A	H:L-POSITION IN	5	RE-28,820-5	9 7
304-13B	H:S-POSITION IN	6	RE-28,820-4	6
304-13C	L:METAL/H:OXIDE IN	7	RE-28,820-7	7
304-20B	L:LARGE HUB IN	8	RE-28,820-6	8
304-20C	L:THICKNESS TAPE IN	9	RE-28,820-8	9
	GND	10	RE-28,820-3	0
+5V	REG +5V OUT	11	RE-28,820-2	9 1
		12		

CN312

304-16A,16B	POSITION MOTOR(-) OUT	1	RE-36,803-5	1
304-16C	T-BRAKE SOL STARTER OUT	2	RE-36,803-3	2
304-17A,17B	POSITION MOTOR(+) OUT	3	RE-36,803-6	3
304-17C	T-BRAKE SOL HOLDER OUT	4	RE-36,803-4	4
304-18C	S-BRAKE SOL STARTER OUT	5	RE-36,803-2	6
304-19C	S-BRAKE SOL HOLDER OUT	6	RE-36,803-1	7

CN314

303-20C	H.M. CONTROL T1 OUT	1	HC-11,461-2	1
303-21A	H.M. CONTROL T2 OUT	2	HC-11,461-3	3
303-21B	H.M. CONTROL T3 OUT	3	HC-11,461-5	4
303-21C	H.M. CONTROL CT OUT	4	HC-11,461-6	6
+5V	REG +5V OUT	5	HC-11,461-4	2
	GND	6	HC-11,461-1	0

CN315

	GND	1	CL-14,331-5	0
+12V	REG +12V OUT	2	CL-14,331-4	2
304-11A	H:CASSETTE DOWN 1 IN	3	CL-14,331-7	1
304-11B	H:CASSETTE DOWN 2 IN	4	CL-14,331-8	3
304-11C	H:CASSETTE IN 1 IN	5	CL-14,331-2	4
304-12A	L:LARGE/H:SMALL IN	6	CL-14,331-1	6
304-12B	L:COMPARTMENT EXIST IN	7	CL-14,331-6	7
304-12C	H:CASSETTE IN 2 IN	8	CL-14,331-3	8
304-14C	L:CASSETTE LAMP ON OUT	9	CL-14,331-9	9
304-18A,18B	UP/DOWN MOTOR(-)OUT	10	CL-14,331-11	9
304-19A,19B	UP/DOWN MOTOR(+)OUT	11	CL-14,331-12	2
UNREG	UNREG GND	12	CL-14,331-10	9 2

CN316

-12V	REG -12V IN	1	MB-331,214-1	7
-5V	REG -5V IN	2	MB-331,214-2	6
UNREG	UNREG GND	3	MB-331,214-3	9 0
UNREG	UNREG GND	4	MB-331,214-4	9 0
+14V	UNREG +14V IN	5	MB-331,214-5	3
+9V	UNREG +9V IN	6	MB-331,214-6	9
+5V	REG +5V IN	7	MB-331,214-7	1
+12V	REG +12V IN	8	MB-331,214-8	2
	GND	9	MB-331,214-9	0
	GND	10	MB-331,214-10	0

CN317

303-15A	Y-IMPACT ERROR IN(X)	1	MB-331,131-1	9
303-15B	Y-IMPACT ERROR IN(G)	2	MB-331,131-2	8 6
303-16A	C-IMPACT ERROR IN(X)	3	MB-331,131-5	8 2
303-16B	C-IMPACT ERROR IN(G)	4	MB-331,131-6	8 2
303-17A	Y-IMPACT ERROR OUT(X)	5	MB-331,131-3	9
303-17B	Y-IMPACT ERROR OUT(G)	6	MB-331,131-4	8 4
303-18A	C-IMPACT ERROR OUT(X)	7	MB-331,131-7	2
303-18B	C-IMPACT ERROR OUT(G)	8	MR-331,131-8	8 0

SY-151 CN301,CN302
SY-64P CN303,CN304

MB-332

CN450

MB-332,306-1	1	L:EJECT COMMAND OUT	453-5
MB-332,306-2	2	L:STOP COMMAND OUT	453-6
MB-332,306-3	3	L:F.FWD COMMAND OUT	453-2
MB-332,306-4	4	L:REW COMMAND OUT	453-4
MB-332,306-5	5	L:PLAY COMMAND OUT	453-3
MB-332,306-6	6	L:SEARCH COMMAND OUT	453-33
MB-332,306-7	7	L:PAUSE COMMAND OUT	453-7
MB-332,306-8	8	L:PAUSE STATUS-1 IN/OUT	453-17
MB-332,306-9	9	L:REC COMMAND OUT	453-8
MB-332,306-10	10	L:CUT IN COMMAND OUT	453-9
MB-332,306-11	11	L:EDIT COMMAND OUT	453-10
MB-332,306-12	12	L:CUT OUT COMMAND OUT	453-11
MB-332,306-13	13	L:VIDEO INSERT CMD OUT	453-20
MB-332,306-14	14	L:AUDIO-1 INSERT CMD OUT	453-21
MB-332,306-15	15	L:AUDIO-2 INSERT CMD OUT	453-22
MB-332,306-16	16	SEARCH COMMAND A OUT	453-24
MB-332,306-17	17	SEARCH COMMAND B OUT	453-25
MB-332,306-18	18	L:REV COMMAND OUT	453-23
MB-332,306-19	19	L:STILL TENSION OUT	453-30
MB-332,306-20	20	H:NORMAL FWD OUT	453-31
MB-332,306-21	21	L:STANDBY STATUS IN	453-15
MB-332,306-22	22	L:STOP STATUS IN	453-16
MB-332,306-23	23	L:F.FWD STATUS IN	453-12
MB-332,306-24	24	L:REW STATUS IN	453-14
MB-332,306-25	25	L:PLAY STATUS IN	453-13
MB-332,306-26	26	L:REC STATUS IN	453-18
MB-332,306-27	27	L:CUT IN STATUS IN	453-19
MB-332,306-28	28	L:TACH IN	453-27
MB-332,306-29	29	L:CAPSTAN LOCK IN	453-28
MB-332,306-30	30	L:PAUSE STATUS-2 IN	453-32
MB-332,306-31	31	SPARE	453-34
MB-332,306-32	32	CTL IN	453-26
MB-332,306-33	33	SYNCHRONIZE OUT	453-29
MB-332,306-34	34	RECEIVE(+) IN/OUT	454-3,455-3
MB-332,306-35	35	RECEIVE(-) IN/OUT	454-8,455-8
MB-332,306-36	36	PRIORITY OUT	455-5
MB-332,306-37	37	TRANSMIT(+) IN/OUT	454-7,455-7
MB-332,306-38	38	TRTASMIT(-) IN/OUT	454-2,455-2
MB-332,306-39	39	PRIORITY IN	454-5
MB-332,306-40	40	FAN MOTOR CHECK OUT	452-2

CN451

MB-331,235-3	1	UNREG GND	
MB-331,235-1	2	UNREG +14V IN	452-1
MB-331,235-2	3	UNREG +9V IN	453-1
MB-331,124-8	4	Y/C DELAY CONTROL(EXT) OUT	456-13
MB-331,124-7	5	REG +12V IN	456-15
MB-331,124-9	6	REG -12V IN	456-7
MB-331,124-5	7	CHROMA CONTROL(EXT) OUT	456-6
MB-331,124-4	8	SET UP CONTROL(EXT)OUT	456-5
MB-331,124-6	9	VIDEO CONTROL(EXT)OUT	456-4
MB-331,124-1	10	SC PHASE CONTROL(EXT)OUT	456-3
MB-331,124-3	11	HUE CONTROL(EXT)OUT	456-2
MB-331,124-2	12	SYNC PHASE CONTROL(EXT)OUT	456-1
MB-331,235-4	13	GND	

M001 FAN MOTOR

CN452

1	FAN MOTOR(+)	
2	FAN MOTOR(-)	450-40

RM-92

CN451

MB-332,314-6	1	GND	
MB-332,314-1	2	H.M.CONTROL T1 IN	
MB-332,314-2	3	H.M.CONTROL T2 IN	
MB-332,314-5	4	REG +5V IN	
MB-332,314-3	5	H.M.CONTROL T3 IN	
MB-332,314-4	6	H.M.CONTROL CT IN	

HC-11

CN453 REMOTE-2(36P)

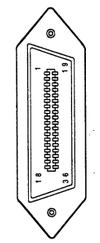

CN454 REMOTE-1 IN(9P)

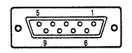

CN455 REMOTE-1 OUT(9P)

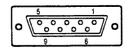

CN456 TBC REMOTE(15P)

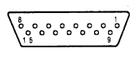

TO/FROM FRAME(3/5)(4/5)(5/5)

Note;RE-28 means RE-28PC in this frame wiring

FRAME (2 / 5)

BVW-85P(EK) ;#10001-

FRAME (3/5)

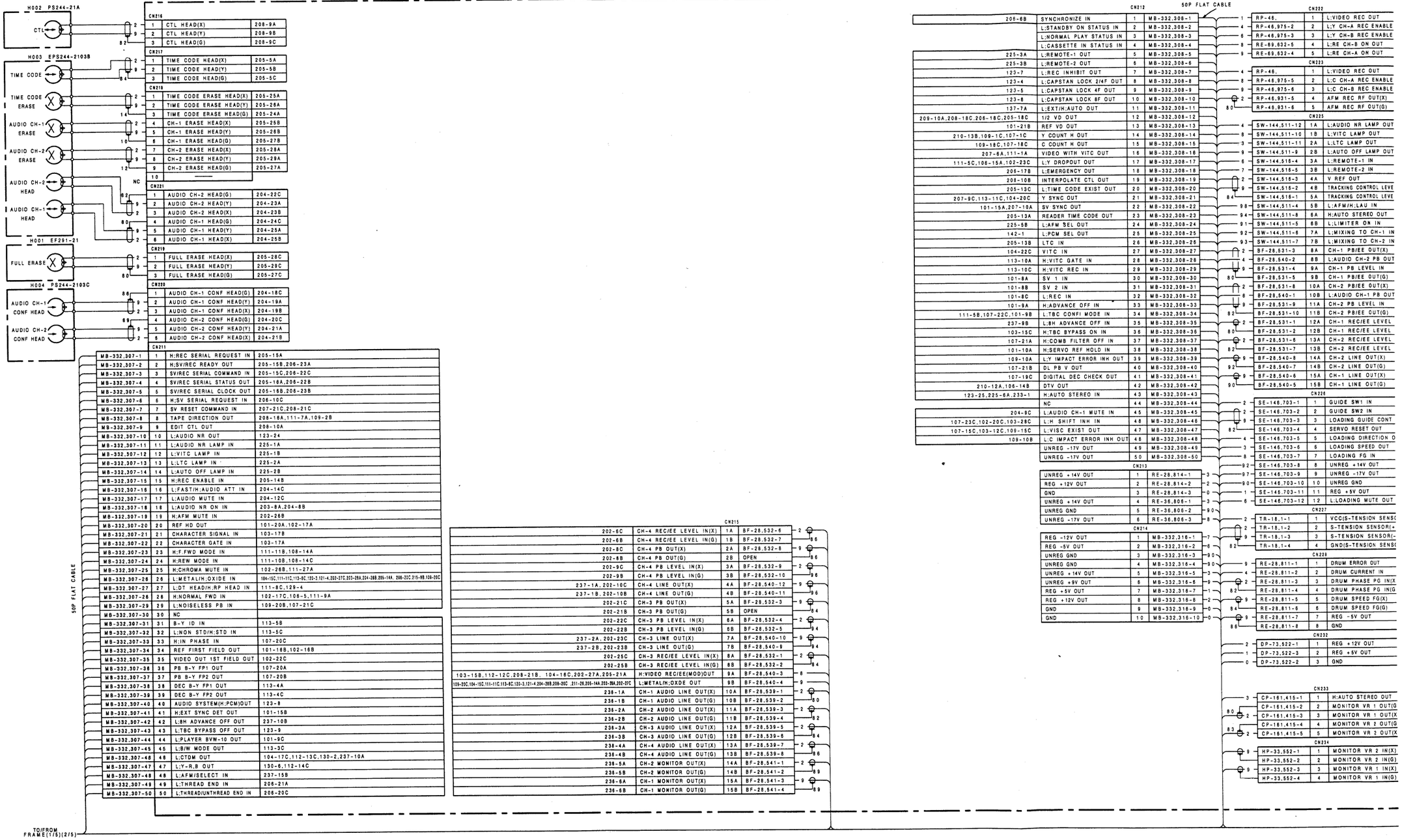

CN216		
1	CTL HEAD(X)	208-9A
2	CTL HEAD(Y)	208-9B
3	CTL HEAD(G)	208-9C

CN217		
1	TIME CODE HEAD(X)	205-5A
2	TIME CODE HEAD(Y)	205-5B
3	TIME CODE HEAD(G)	205-5C

CN218		
1	TIME CODE ERASE HEAD(X)	205-25A
2	TIME CODE ERASE HEAD(Y)	205-26A
3	TIME CODE ERASE HEAD(G)	205-24A
4	CH-1 ERASE HEAD(X)	205-25B
5	CH-1 ERASE HEAD(Y)	205-26B
6	CH-1 ERASE HEAD(G)	205-27B
7	CH-2 ERASE HEAD(X)	205-28A
8	CH-2 ERASE HEAD(Y)	205-29A
9	CH-2 ERASE HEAD(G)	205-27A

CN221		
1	AUDIO CH-2 HEAD(G)	204-22C
2	AUDIO CH-2 HEAD(Y)	204-23A
3	AUDIO CH-2 HEAD(X)	204-23B
4	AUDIO CH-1 HEAD(G)	204-24C
5	AUDIO CH-1 HEAD(Y)	204-25A
6	AUDIO CH-1 HEAD(X)	204-25B

CN219		
1	FULL ERASE HEAD(X)	205-28C
2	FULL ERASE HEAD(Y)	205-29C
3	FULL ERASE HEAD(G)	205-27C

CN220		
1	AUDIO CH-1 CONF HEAD(G)	204-18C
2	AUDIO CH-1 CONF HEAD(Y)	204-19A
3	AUDIO CH-1 CONF HEAD(X)	204-19B
4	AUDIO CH-2 CONF HEAD(G)	204-20C
5	AUDIO CH-2 CONF HEAD(Y)	204-21A
6	AUDIO CH-2 CONF HEAD(X)	204-21B

CN211			
MB-332,307-1	1	H:REC SERIAL REQUEST IN	205-15A
MB-332,307-2	2	H;SV/REC READY OUT	205-15B,206-23A
MB-332,307-3	3	SV/REC SERIAL COMMAND IN	205-15C,206-22C
MB-332,307-4	4	SV/REC SERIAL STATUS OUT	205-16A,206-22B
MB-332,307-5	5	SV/REC SERIAL CLOCK OUT	205-16B,206-23B
MB-332,307-6	6	H;SV SERIAL REQUEST IN	206-10C
MB-332,307-7	7	SV RESET COMMAND IN	207-21C,208-21C
MB-332,307-8	8	TAPE DIRECTION OUT	208-16A,111-7A,109-2B
MB-332,307-9	9	EDIT CTL OUT	208-10A
MB-332,307-10	10	L;AUDIO NR OUT	123-24
MB-332,307-11	11	L;AUDIO NR LAMP IN	225-1A
MB-332,307-12	12	L;VITC LAMP IN	225-1B
MB-332,307-13	13	L;LTC LAMP IN	225-2A
MB-332,307-14	14	L;AUTO OFF LAMP IN	225-2B
MB-332,307-15	15	H;REC ENABLE IN	205-14B
MB-332,307-16	16	L;FAST/H;AUDIO ATT IN	204-14C
MB-332,307-17	17	L;AUDIO MUTE IN	204-12C
MB-332,307-18	18	L;AUDIO NR ON IN	203-8A,204-8B
MB-332,307-19	19	H;AFM MUTE IN	202-26B
MB-332,307-20	20	REF HD OUT	101-20A,102-17A
MB-332,307-21	21	CHARACTER SIGNAL IN	103-17B
MB-332,307-22	22	CHARACTER GATE IN	103-17A
MB-332,307-23	23	H;F.FWD MODE IN	111-11B,108-14A
MB-332,307-24	24	H;REW MODE IN	111-10B,108-14C
MB-332,307-25	25	H;CHROMA MUTE IN	102-26B,111-27A
MB-332,307-26	26	L;METAL/H;OXIDE IN	104-15C,111-11C,113-8C,120-3,121-4,202-27C,203-28A,204-26B,205-14A, 206-20C,215-9B,109-20C
MB-332,307-27	27	L;DT HEAD/H;RP HEAD IN	111-8C,129-4
MB-332,307-28	28	H;NORMAL FWD IN	102-17C,106-5,111-9A
MB-332,307-29	29	L;NOISELESS PB IN	109-20B,107-21C
MB-332,307-30	30	NC	
MB-332,307-31	31	B-Y ID IN	113-5B
MB-332,307-32	32	L;NON STD/H;STD IN	113-5C
MB-332,307-33	33	H;IN PHASE IN	107-20C
MB-332,307-34	34	REF FIRST FIELD OUT	101-16B,102-16B
MB-332,307-35	35	VIDEO OUT 1ST FIELD OUT	102-22C
MB-332,307-36	36	PB B-Y FP1 OUT	107-20A
MB-332,307-37	37	PB B-Y FP2 OUT	107-20B
MB-332,307-38	38	DEC B-Y FP1 OUT	113-4A
MB-332,307-39	39	DEC B-Y FP2 OUT	113-4C
MB-332,307-40	40	AUDIO SYSTEM(H;PCM)OUT	123-8
MB-332,307-41	41	H;EXT SYNC DET OUT	101-15B
MB-332,307-42	42	L;8H ADVANCE OFF OUT	237-10B
MB-332,307-43	43	L;TBC BYPASS OFF OUT	123-9
MB-332,307-44	44	L;PLAYER BVW-10 OUT	101-9C
MB-332,307-45	45	L;B/W MODE OUT	113-3C
MB-332,307-46	46	L;CTDM OUT	104-17C,112-13C,130-2,237-10A
MB-332,307-47	47	L;Y-R,B OUT	130-6,112-14C
MB-332,307-48	48	L;AFM/SELECT IN	237-15B
MB-332,307-49	49	L;THREAD END IN	206-21A
MB-332,307-50	50	L;THREAD/UNTHREAD END IN	206-20C

CN215			
202-5C	CH-4 REC/EE LEVEL IN(X)	1A	BF-28,532-6
202-6B	CH-4 REC/EE LEVEL IN(G)	1B	BF-28,532-7
202-8C	CH-4 PB OUT(X)	2A	BF-28,532-8
202-8B	CH-4 PB OUT(G)	2B	OPEN
202-9C	CH-4 PB LEVEL IN(X)	3A	BF-28,532-9
202-9B	CH-4 PB LEVEL IN(G)	3B	BF-28,532-10
237-1A,202-10C	CH-4 LINE OUT(X)	4A	BF-28,540-12
237-1B,202-10B	CH-4 LINE OUT(G)	4B	BF-28,540-11
202-21C	CH-3 PB OUT(X)	5A	BF-28,532-3
202-21B	CH-3 PB OUT(G)	5B	OPEN
202-22C	CH-3 PB LEVEL IN(X)	6A	BF-28,532-4
202-22B	CH-3 PB LEVEL IN(G)	6B	BF-28,532-5
237-2A,202-23C	CH-3 LINE OUT(X)	7A	BF-28,540-10
237-2B,202-23B	CH-3 LINE OUT(G)	7B	BF-28,540-9
202-25C	CH-3 REC/EE LEVEL IN(X)	8A	BF-28,532-1
202-25B	CH-3 REC/EE LEVEL IN(G)	8B	BF-28,532-2
103-15B,112-12C,208-21B, 104-16C,202-27A,205-21A	H;VIDEO REC/EE(MOD)OUT	9A	BF-28,540-3
109-20C,104-15C,111-11C,113-8C,120-3,121-4,204-26B,209-20C ,211-26,205-14A,202-29A,202-27C	L;METAL/H;OXDE OUT	9B	BF-28,540-4
236-1A	CH-1 AUDIO LINE OUT(X)	10A	BF-28,539-1
236-1B	CH-1 AUDIO LINE OUT(G)	10B	BF-28,539-2
236-2A	CH-2 AUDIO LINE OUT(X)	11A	BF-28,539-3
236-2B	CH-2 AUDIO LINE OUT(G)	11B	BF-28,539-4
236-3A	CH-3 AUDIO LINE OUT(X)	12A	BF-28,539-5
236-3B	CH-3 AUDIO LINE OUT(G)	12B	BF-28,539-6
236-4A	CH-4 AUDIO LINE OUT(X)	13A	BF-28,539-7
236-4B	CH-4 AUDIO LINE OUT(G)	13B	BF-28,539-8
236-5A	CH-2 MONITOR OUT(X)	14A	BF-28,541-1
236-5B	CH-2 MONITOR OUT(G)	14B	BF-28,541-2
236-6A	CH-1 MONITOR OUT(X)	15A	BF-28,541-3
236-6B	CH-1 MONITOR OUT(G)	15B	BF-28,541-4

CN212			
206-6B	SYNCHRONIZE IN	1	MB-332,308-1
	L;STANDBY ON STATUS IN	2	MB-332,308-2
	L;NORMAL PLAY STATUS IN	3	MB-332,308-3
	L;CASSETTE IN STATUS IN	4	MB-332,308-4
225-3A	L;REMOTE-1 OUT	5	MB-332,308-5
225-3B	L;REMOTE-2 OUT	6	MB-332,308-6
123-7	L;REC INHIBIT OUT	7	MB-332,308-7
123-4	L;CAPSTAN LOCK 2/4F OUT	8	MB-332,308-8
123-5	L;CAPSTAN LOCK 4F OUT	9	MB-332,308-9
123-6	L;CAPSTAN LOCK 8F OUT	10	MB-332,308-10
137-7A	L;EXT/H;AUTO OUT	11	MB-332,308-11
209-10A,208-18C,206-18C,205-18C	1/2 VD OUT	12	MB-332,308-12
101-21B	REF VD OUT	13	MB-332,308-13
210-13B,109-1C,107-1C	Y COUNT H OUT	14	MB-332,308-14
109-18C,107-18C	C COUNT H OUT	15	MB-332,308-15
207-6A,111-1A	VIDEO WITH VITC OUT	16	MB-332,308-16
111-5C,106-15A,102-23C	L;Y DROPOUT OUT	17	MB-332,308-17
206-17B	L;EMERGENCY OUT	18	MB-332,308-18
208-10B	INTERPOLATE CTL OUT	19	MB-332,308-19
205-13C	L;TIME CODE EXIST OUT	20	MB-332,308-20
207-9C,113-11C,104-20C	Y SYNC OUT	21	MB-332,308-21
101-15A,207-10A	SV SYNC OUT	22	MB-332,308-22
205-13A	READER TIME CODE OUT	23	MB-332,308-23
225-5B	L;AFM SEL OUT	24	MB-332,308-24
142-1	L;PCM SEL OUT	25	MB-332,308-25
205-13B	LTC IN	26	MB-332,308-26
104-22C	VITC IN	27	MB-332,308-27
113-10A	H;VITC GATE IN	28	MB-332,308-28
113-10C	H;VITC REC IN	29	MB-332,308-29
101-8A	SV 1 IN	30	MB-332,308-30
101-8B	SV 2 IN	31	MB-332,308-31
101-8C	L;REC IN	32	MB-332,308-32
101-9A	H;ADVANCE OFF IN	33	MB-332,308-33
111-5B,107-22C,101-9B	L;TBC CONFI MODE IN	34	MB-332,308-34
237-9B	L;8H ADVANCE OFF IN	35	MB-332,308-35
103-15C	H;TBC BYPASS ON IN	36	MB-332,308-36
107-21A	H;COMB FILTER OFF IN	37	MB-332,308-37
101-10A	H;SERVO REF HOLD IN	38	MB-332,308-38
109-10A	L;Y IMPACT ERROR INH OUT	39	MB-332,308-39
107-21B	DL PB V OUT	40	MB-332,308-40
107-19C	DIGITAL DEC CHECK OUT	41	MB-332,308-41
210-12A,106-14B	DTV OUT	42	MB-332,308-42
123-25,225-6A,233-1	H;AUTO STEREO IN	43	MB-332,308-43
	NC	44	MB-332,308-44
204-8C	L;AUDIO CH-1 MUTE IN	45	MB-332,308-45
107-23C,102-20C,103-28C	L;H SHIFT INH IN	46	MB-332,308-46
107-15C,103-12C,109-15C	L;VISC EXIST OUT	47	MB-332,308-47
109-10B	L/C IMPACT ERROR INH OUT	48	MB-332,308-48
	UNREG -17V OUT	49	MB-332,308-49
	UNREG -17V OUT	50	MB-332,308-50

CN213			
UNREG +14V OUT	1	RE-28,814-1	
REG +12V OUT	2	RE-28,814-2	
GND	3	RE-28,814-3	
UNREG +14V OUT	4	RE-36,806-1	
UNREG GND	5	RE-36,806-2	
UNREG -17V OUT	6	RE-36,806-3	

CN214			
REG -12V OUT	1	MB-332,316-1	
REG -5V OUT	2	MB-332,316-2	
UNREG GND	3	MB-332,316-3	
UNREG GND	4	MB-332,316-4	
UNREG +14V OUT	5	MB-332,316-5	
UNREG +9V OUT	6	MB-332,316-6	
REG +5V OUT	7	MB-332,316-7	
REG +12V OUT	8	MB-332,316-8	
GND	9	MB-332,316-9	
GND	10	MB-332,316-10	

CN222		
RP-46,	1	L;VIDEO REC OUT
RP-46,975-2	2	L;Y CH-A REC ENABLE
RP-46,975-3	3	L;Y CH-B REC ENABLE
RE-69,632-5	4	L;RE CH-B ON OUT
RE-69,632-4	5	L;RE CH-A ON OUT

CN223		
RP-46,	1	L;VIDEO REC OUT
RP-46,975-5	2	L;C CH-A REC ENABLE
RP-46,975-6	3	L;C CH-B REC ENABLE
RP-46,931-5	4	AFM REC RF OUT(X)
RP-46,931-6	5	AFM REC RF OUT(G)

CN225		
SW-144,511-12	1A	L;AUDIO NR LAMP OUT
SW-144,511-10	1B	L;VITC LAMP OUT
SW-144,511-11	2A	L;LTC LAMP OUT
SW-144,511-9	2B	L;AUTO OFF LAMP OUT
SW-144,516-4	3A	L;REMOTE-1 IN
SW-144,516-5	3B	L;REMOTE-2 IN
SW-144,516-3	4A	V REF OUT
SW-144,516-2	4B	TRACKING CONTROL LEVE
SW-144,516-1	5A	TRACKING CONTROL LEVE
SW-144,511-4	5B	L;AFM/H;LAU IN
SW-144,511-8	6A	H;AUTO STEREO OUT
SW-144,511-5	6B	L;LIMITER ON IN
SW-144,511-6	7A	L;MIXING TO CH-1 IN
SW-144,511-7	7B	L;MIXING TO CH-2 IN
BF-28,531-3	8A	CH-1 PB/EE OUT(X)
BF-28,540-2	8B	L;AUDIO CH-2 PB OUT
BF-28,531-4	9A	CH-1 PB LEVEL IN
BF-28,531-5	9B	CH-1 PB/EE OUT(G)
BF-28,531-8	10A	CH-2 PB/EE OUT(X)
BF-28,540-1	10B	L;AUDIO CH-1 PB OUT
BF-28,531-9	11A	CH-2 PB LEVEL IN
BF-28,531-10	11B	CH-2 PB/EE OUT(G)
BF-28,531-1	12A	CH-1 REC/EE LEVEL
BF-28,531-2	12B	CH-1 REC/EE LEVEL
BF-28,531-6	13A	CH-2 REC/EE LEVEL
BF-28,531-7	13B	CH-2 REC/EE LEVEL
BF-28,540-9	14A	CH-2 LINE OUT(X)
BF-28,540-7	14B	CH-2 LINE OUT(G)
BF-28,540-6	15A	CH-1 LINE OUT(X)
BF-28,540-5	15B	CH-1 LINE OUT(G)

CN226		
SE-146,703-1	1	GUIDE SW1 IN
SE-146,703-2	2	GUIDE SW2 IN
SE-146,703-3	3	LOADING GUIDE CONT
SE-146,703-4	4	SERVO RESET OUT
SE-146,703-5	5	LOADING DIRECTION O
SE-146,703-6	6	LOADING SPEED OUT
SE-146,703-7	7	LOADING FG IN
SE-146,703-8	8	UNREG +14V OUT
SE-146,703-9	9	UNREG -17V OUT
SE-146,703-10	10	UNREG GND
SE-146,703-11	11	REG +5V OUT
SE-146,703-12	12	L;LOADING MUTE OUT

CN227		
TR-18,1-1	1	VCC(S-TENSION SENS(
TR-18,1-2	2	S-TENSION SENSOR(+
TR-18,1-3	3	S-TENSION SENSOR(-
TR-18,1-4	4	GND(S-TENSION SENS(

CN228		
RE-28,811-1	1	DRUM ERROR OUT
RE-28,811-2	2	DRUM CURRENT IN
RE-28,811-3	3	DRUM PHASE PG IN(X
RE-28,811-4	4	DRUM PHASE PG IN(G
RE-28,811-5	5	DRUM SPEED FG(X)
RE-28,811-6	6	DRUM SPEED FG(G)
RE-28,811-7	7	REG -5V OUT
RE-28,811-8	8	GND

CN232		
DP-73,522-1	1	REG +12V OUT
DP-73,522-3	2	REG +5V OUT
DP-73,522-2	3	GND

CN233		
CP-161,415-1	1	H;AUTO STEREO OUT
CP-161,415-2	2	MONITOR VR 1 OUT(G
CP-161,415-3	3	MONITOR VR 1 OUT(X
CP-161,415-4	4	MONITOR VR 2 OUT(G
CP-161,415-5	5	MONITOR VR 2 OUT(X

CN234		
HP-33,552-1	1	MONITOR VR 2 IN(X)
HP-33,552-2	2	MONITOR VR 2 IN(G)
HP-33,552-3	3	MONITOR VR 1 IN(X)
HP-33,552-4	4	MONITOR VR 1 IN(G)

A B C D E F G H

FRAME(3/5)

50P FLAT CABLE

CN212

206-6B	SYNCHRONIZE IN	1	MB-332,308-1
	L:STANDBY ON STATUS IN	2	MB-332,308-2
	L:NORMAL PLAY STATUS IN	3	MB-332,308-3
	L:CASSETTE IN STATUS IN	4	MB-332,308-4
225-3A	L:REMOTE-1 OUT	5	MB-332,308-5
225-3B	L:REMOTE-2 OUT	6	MB-332,308-6
123-7	L:REC INHIBIT OUT	7	MB-332,308-7
123-4	L:CAPSTAN LOCK 2/4F OUT	8	MB-332,308-8
123-5	L:CAPSTAN LOCK 4F OUT	9	MB-332,308-9
123-6	L:CAPSTAN LOCK 8F OUT	10	MB-332,308-10
137-7A	L:EXT/H:AUTO OUT	11	MB-332,308-11
209-10A,208-18C,206-18C,205-18C	1/2 VD OUT	12	MB-332,308-12
101-21B	REF VD OUT	13	MB-332,308-13
210-13B,109-1C,107-1C	Y COUNT H OUT	14	MB-332,308-14
109-18C,107-18C	C COUNT H OUT	15	MB-332,308-15
207-8A,111-1A	VIDEO WITH VITC OUT	16	MB-332,308-16
111-5C,106-15A,102-23C	L:Y DROPOUT OUT	17	MB-332,308-17
206-17B	L:EMERGENCY OUT	18	MB-332,308-18
208-10B	INTERPOLATE CTL OUT	19	MB-332,308-19
205-13C	L:TIME CODE EXIST OUT	20	MB-332,308-20
207-9C,113-11C,104-20C	Y SYNC OUT	21	MB-332,308-21
101-15A,207-10A	SV SYNC OUT	22	MB-332,308-22
205-13A	READER TIME CODE OUT	23	MB-332,308-23
225-5B	L:AFM SEL OUT	24	MB-332,308-24
142-1	L:PCM SEL OUT	25	MB-332,308-25
205-13B	LTC IN	26	MB-332,308-26
104-22C	VITC IN	27	MB-332,308-27
113-10A	H:VITC GATE IN	28	MB-332,308-28
113-10C	H:VITC REC IN	29	MB-332,308-29
101-8A	SV 1 IN	30	MB-332,308-30
101-8B	SV 2 IN	31	MB-332,308-31
101-8C	L:REC IN	32	MB-332,308-32
101-9A	H:ADVANCE OFF IN	33	MB-332,308-33
111-5B,107-22C,101-9B	L:TBC CONFI MODE IN	34	MB-332,308-34
237-9B	L:8H ADVANCE OFF IN	35	MB-332,308-35
103-15C	H:TBC BYPASS ON IN	36	MB-332,308-36
107-21A	H:COMB FILTER OFF IN	37	MB-332,308-37
101-10A	H:SERVO REF HOLD IN	38	MB-332,308-38
109-10A	L:Y IMPACT ERROR INH OUT	39	MB-332,308-39
107-21B	DL PB V OUT	40	MB-332,308-40
107-19C	DIGITAL DEC CHECK OUT	41	MB-332,308-41
210-12A,106-14B	DTV OUT	42	MB-332,308-42
123-25,225-6A,233-1	H:AUTO STEREO IN	43	MB-332,308-43
	NC	44	MB-332,308-44
204-9C	L:AUDIO CH-1 MUTE IN	45	MB-332,308-45
107-23C,102-20C,103-28C	L:H SHIFT INH IN	46	MB-332,308-46
107-15C,103-12C,109-15C	L:VISC EXIST OUT	47	MB-332,308-47
109-10B	L:C IMPACT ERROR INH OUT	48	MB-332,308-48
	UNREG -17V OUT	49	MB-332,308-49
	UNREG -17V OUT	50	MB-332,308-50

CN213

	UNREG +14V OUT	1	RE-28,814-1
	REG +12V OUT	2	RE-28,814-2
	GND	3	RE-28,814-3
	UNREG +14V OUT	4	RE-36,806-1
	UNREG GND	5	RE-36,806-2
	UNREG -17V OUT	6	RE-36,806-3

CN214

	REG -12V OUT	1	MB-332,316-1
	REG -5V OUT	2	MB-332,316-2
	UNREG GND	3	MB-332,316-3
	UNREG GND	4	MB-332,316-4
	UNREG +14V OUT	5	MB-332,316-5
	UNREG +8V OUT	6	MB-332,316-6
	REG +5V OUT	7	MB-332,316-7
	REG +12V OUT	8	MB-332,316-8
	GND	9	MB-332,316-9
	GND	10	MB-332,316-10

CN215

202-5C	CH-4 REC/EE LEVEL IN(X)	1A	BF-28,532-6
202-6B	CH-4 REC/EE LEVEL IN(G)	1B	BF-28,532-7
202-8C	CH-4 PB OUT(X)	2A	BF-28,532-8
202-8B	CH-4 PB OUT(G)	2B	OPEN
202-9C	CH-4 PB LEVEL IN(X)	3A	BF-28,532-9
202-9B	CH-4 PB LEVEL IN(G)	3B	BF-28,532-10
237-1A,202-10C	CH-4 LINE OUT(X)	4A	BF-28,540-12
237-1B,202-10B	CH-4 LINE OUT(G)	4B	BF-28,540-11
202-21C	CH-3 PB OUT(X)	5A	BF-28,532-3
202-21B	CH-3 PB OUT(G)	5B	OPEN
202-22C	CH-3 PB LEVEL IN(X)	6A	BF-28,532-4
202-22B	CH-3 PB LEVEL IN(G)	6B	BF-28,532-5
237-2A,202-23C	CH-3 LINE OUT(X)	7A	BF-28,540-10
237-2B,202-23B	CH-3 LINE OUT(G)	7B	BF-28,540-9
202-25C	CH-3 REC/EE LEVEL IN(X)	8A	BF-28,532-1
202-25B	CH-3 REC/EE LEVEL IN(G)	8B	BF-28,532-2
C,20[illegible]-21B, 104-16C,202-27A,205-21A	H:VIDEO REC/EE(MOD)OUT	9A	BF-28,540-3
[illegible]-6C,123-3,121-4,204-2[illegible]B,206-20C 211-26,205-14A,223-28A,202-27C	L:METAL/H:OXDE OUT	9B	BF-28,540-4
236-1A	CH-1 AUDIO LINE OUT(X)	10A	BF-28,539-1
236-1B	CH-1 AUDIO LINE OUT(G)	10B	BF-28,539-2
236-2A	CH-2 AUDIO LINE OUT(X)	11A	BF-28,539-3
236-2B	CH-2 AUDIO LINE OUT(G)	11B	BF-28,539-4
236-3A	CH-3 AUDIO LINE OUT(X)	12A	BF-28,539-5
236-3B	CH-3 AUDIO LINE OUT(G)	12B	BF-28,539-6
236-4A	CH-4 AUDIO LINE OUT(X)	13A	BF-28,539-7
236-4B	CH-4 AUDIO LINE OUT(G)	13B	BF-28,539-8
236-5A	CH-2 MONITOR OUT(X)	14A	BF-28,541-1
236-5B	CH-2 MONITOR OUT(G)	14B	BF-28,541-2
236-6A	CH-1 MONITOR OUT(X)	15A	BF-28,541-3
236-6B	CH-1 MONITOR OUT(G)	15B	BF-28,541-4

CN222

	RP-46,	1	L:VIDEO REC OUT
	RP-46,975-2	2	L:Y CH-A REC ENABLE OUT
	RP-46,975-3	3	L:Y CH-B REC ENABLE OUT
	RE-69,632-5	4	L:RE CH-B ON OUT
	RE-69,632-4	5	L:RE CH-A ON OUT

205-20C,223-1
205-23C
205-23B
205-21C
205-22A

CN223

	RP-46,	1	L:VIDEO REC OUT
	RP-46,975-5	2	L:C CH-A REC ENABLE OUT
	RP-46,975-6	3	L:C CH-B REC ENABLE OUT
	RP-46,931-5	4	AFM REC RF OUT(X)
	RP-46,931-6	5	AFM REC RF OUT(G)

205-20C,222-1
205-22C
205-22B
202-16C
202-16B

CN225

	SW-144,511-12	1A	L:AUDIO NR LAMP OUT
	SW-144,511-10	1B	L:VITC LAMP OUT
	SW-144,511-11	2A	L:LTC LAMP OUT
	SW-144,511-9	2B	L:AUTO OFF LAMP OUT
	SW-144,516-4	3A	L:REMOTE-1 IN
	SW-144,516-5	3B	L:REMOTE-2 IN
	SW-144,516-3	4A	V REF OUT
	SW-144,516-2	4B	TRACKING CONTROL LEVEL IN(X)
	SW-144,516-1	5A	TRACKING CONTROL LEVEL IN(G)
	SW-144,511-4	5B	L:AFM/H:LAU IN
	SW-144,511-8	6A	H:AUTO STEREO OUT
	SW-144,511-5	6B	L:LIMITER ON IN
	SW-144,511-6	7A	L:MIXING TO CH-1 IN
	SW-144,511-7	7B	L:MIXING TO CH-2 IN
	BF-28,531-3	8A	CH-1 PB/EE OUT(X)
	BF-28,540-2	8B	L:AUDIO CH-2 PB OUT
	BF-28,531-4	9A	CH-1 PB LEVEL IN
	BF-28,531-5	9B	CH-1 PB/EE OUT(G)
	BF-28,531-8	10A	CH-2 PB/EE OUT(X)
	BF-28,540-1	10B	L:AUDIO CH-1 PB OUT
	BF-28,531-9	11A	CH-2 PB LEVEL IN
	BF-28,531-10	11B	CH-2 PB/EE OUT(G)
	BF-28,531-1	12A	CH-1 REC/EE LEVEL IN(X)
	BF-28,531-2	12B	CH-1 REC/EE LEVEL IN(G)
	BF-28,531-6	13A	CH-2 REC/EE LEVEL IN(X)
	BF-28,531-7	13B	CH-2 REC/EE LEVEL IN(G)
	BF-28,540-8	14A	CH-2 LINE OUT(X)
	BF-28,540-7	14B	CH-2 LINE OUT(G)
	BF-28,540-6	15A	CH-1 LINE OUT(X)
	BF-28,540-5	15B	CH-1 LINE OUT(G)

211-11
212-11
211-13
211-14
212-5
212-6
206-5A,207-5A,208-5A
206-5C
206-6A
212-24
123-25,212-43,233-1
203-23A
203-24A
203-25A
203-11A,204-11B
203-16A,204-16B,205-9C
204-11A
203-10A,204-10A
203-13A,204-13B
203-16B,204-16C,205-10A
204-13A
203-12A,204-12A
203-19A
203-20A
203-21A
203-22A
204-7A,237-3A
204-6A,237-3B
204-9A,237-4A
204-8A,237-4B

CN226

	SE-146,703-1	1	GUIDE SW1 IN
	SE-146,703-2	2	GUIDE SW2 IN
	SE-146,703-3	3	LOADING GUIDE CONT OUT
	SE-146,703-4	4	SERVO RESET OUT
	SE-146,703-5	5	LOADING DIRECTION OUT
	SE-146,703-6	6	LOADING SPEED OUT
	SE-146,703-7	7	LOADING FG IN
	SE-146,703-8	8	UNREG +14V OUT
	SE-146,703-9	9	UNREG -17V OUT
	SE-146,703-10	10	UNREG GND
	SE-146,703-11	11	REG +5V OUT
	SE-146,703-12	12	L:LOADING MUTE OUT

206-8B
206-8C
206-11C
205-29C,207-29C,208-29C
206-10A
206-9C
206-16C
206-8A

CN227

	TR-18,1-1	1	VCC(S-TENSION SENSOR)
	TR-18,1-2	2	S-TENSION SENSOR(+)IN
	TR-18,1-3	3	S-TENSION SENSOR(-)IN
	TR-18,1-4	4	GND(S-TENSION SENSOR)

207-28A
207-28B
207-28C
207-27A

CN228

	RE-28,811-1	1	DRUM ERROR OUT
	RE-28,811-2	2	DRUM CURRENT IN
	RE-28,811-3	3	DRUM PHASE PG IN(X)
	RE-28,811-4	4	DRUM PHASE PG IN(G)
	RE-28,811-5	5	DRUM SPEED FG(X)
	RE-28,811-6	6	DRUM SPEED FG(G)
	RE-28,811-7	7	REG -5V OUT
	RE-28,811-8	8	GND

208-15B
208-15C
208-14B
208-14A
208-13C

CN232

	DP-73,522-1	1	REG +12V OUT
	DP-73,522-3	2	REG +5V OUT
	DP-73,522-2	3	GND

CN233

	CP-161,415-1	1	H:AUTO STEREO OUT
	CP-161,415-2	2	MONITOR VR 1 OUT(G)
	CP-161,415-3	3	MONITOR VR 1 OUT(X)
	CP-161,415-4	4	MONITOR VR 2 OUT(G)
	CP-161,415-5	5	MONITOR VR 2 OUT(X)

123-25,225-8A,
212-43
234-4
234-3
234-2
234-1

CN234

	HP-33,552-1	1	MONITOR VR 2 IN(X)
	HP-33,552-2	2	MONITOR VR 2 IN(G)
	HP-33,552-3	3	MONITOR VR 1 IN(X)
	HP-33,552-4	4	MONITOR VR 1 IN(G)

233-5
233-4
233-3
233-2

CN231

210-24A	DT ERROR(A)OUT	1	DT-15,611-3
210-24B	DT ERROR(B)OUT	2	DT-15,611-1
210-24C	DT ERROR(G)OUT	3	DT-15,611-2
210-28A	SG A(-)IN	4	DT-15,611-11
210-25C	SG A(+)IN	5	DT-15,611-12
210-26C	SG A(G)IN	6	DT-15,611-10
210-28A	SG B(-)IN	7	DT-15,611-8
210-27C	SG B(+)IN	8	DT-15,611-9
210-27A	SG B(G)IN	9	DT-15,611-7
	REG +12V OUT	10	DT-15,611-4
	GND	11	DT-15,611-5
	REG -12V OUT	12	DT-15,611-6

CN235

	UNREG +14V OUT	1	RM-92,451-2
	UNREG +9V OUT	2	RM-92,451-3
	UNREG GND	3	RM-92,451-1
	D-GND	4	RM-92,451-13

CN236

215-10A	CH-1 AUDIO LINE IN(X)	1A	CP-101,443-1
215-10B	CH-1 AUDIO LINE IN(G)	1B	CP-101,443-2
215-11A	CH-2 AUDIO LINE IN(X)	2A	CP-101,443-3
215-11B	CH-2 AUDIO LINE IN(G)	2B	CP-101,443-4
215-12A	CH-3 AUDIO LINE IN(X)	3A	CP-101,443-5
215-12B	CH-3 AUDIO LINE IN(G)	3B	CP-101,443-6
215-13A	CH-4 AUDIO LINE IN(X)	4A	CP-101,443-7
215-13B	CH-4 AUDIO LINE IN(G)	4B	CP-101,443-8
215-14A	CH-2 MONITOR IN(X)	5A	CP-161,407-3
215-14B	CH-2 MONITOR IN(G)	5B	CP-161,407-4
215-15A	CH-1 MONITOR IN(X)	6A	CP-161,407-1
215-15B	CH-1 MONITOR IN(G)	6B	CP-161,407-2

CN237

215-4A,202-10C	CH-4 LINE OUT(X)	1A	CP-161,409-2
215-4B,202-10B	CH-4 LINE OUT(G)	1B	CP-161,409-1
215-7A,202-23C	CH-3 LINE OUT(X)	2A	CP-161,409-4
215-7B,202-23B	CH-3 LINE OUT(G)	2B	CP-161,409-3
225-14A,204-7A	CH-2 LINE OUT(X)	3A	CP-161,411-2
225-14B,204-8A	CH-2 LINE OUT(G)	3B	CP-161,411-1
225-15A,204-9A	CH-1 LINE OUT(X)	4A	CP-161,411-4
255-15B,204-8A	CH-1 LINE OUT(G)	4B	CP-161,411-3
205-12B	EXT TIME CODE IN(X)	5A	CN PANEL,008-2
		5B	NC
205-12C	EXT TIME CODE IN(Y)	6A	CN PANEL,008-3
205-12A	EXT TIME CODE IN(G)	6B	CN PANEL,008-1
205-11B	TIME CODE OUT(X)	7A	CN PANEL,007-2
237-9A,123-26	L:MONO/H:STEREO OUT	7B	
205-11C	TIME CODE OUT(Y)	8A	CN PANEL,007-3
205-11A	TIME CODE OUT(G)	8B	CN PANEL,007-1
237-7B,123-26	L:MONO/H:STEREO OUT	9A	
212-35	L:8H ADVANCE OFF OUT	9B	CN PANEL,025-12
130-2,112-13C,104-17C,211-46	L:CTDM OUT	10A	CN PANEL,025-11
211-42	L:8H ADVANCE OFF IN	10B	CN PANEL,019-12
	REG +12V OUT	11A	CP-161,413-3
		11B	CP-101,444-1
		12A	CP-161,413-2
	GND	12B	CP-101,444-2
	REG -12V OUT	13A	CP-161,413-1
		13B	CP-101,444-3
130-11	H:MONI SEL CH-1/3 OUT	14A	CP-161,414-1
130-12	H:MONI SEL STEREO OUT	14B	CP-161,414-2
130-13	H:MONI SEL CH-2/4 OUT	15A	CP-161,414-3
211-48	L:AFM/SELECT OUT	15B	CP-161,414-4

CN229

	RE-28,813-1	1	H:CAPSTAN POWER ON OUT
	RE-28,813-2	2	CAPSTAN ERROR OUT
	RE-28,813-3	3	CAPSTAN CURRENT IN
	RE-28,813-4	4	CAPSTAN FWD/REV OUT
	RE-28,813-5	5	Vcc (CAPSTAN FG)
	RE-28,813-6	6	CAPSTAN FG(A)IN
	RE-28,813-7	7	CAPSTAN FG(B)IN
	RE-28,813-8	8	GND(CAPSTAN FG)

208-13A
208-11C
207-11C,208-13B,210-29B
207-11B,206-11B,208-11B,210-29C
208-22A
208-22B
208-22C
208-23A

CN230

	RE-36,807-1	1	H:REEL POWER ON OUT
	RE-36,807-2	2	S-REEL CURRENT IN
	RE-36,807-3	3	S-REEL MOTOR DRIVE OUT
	RE-36,807-4	4	S-REEL FG-2 IN
	RE-36,807-5	5	S-REEL FG-1 IN
	RE-36,807-6	6	T-REEL MOTOR DRIVE OUT
	RE-36,807-7	7	T-REEL FG-2 IN
	RE-36,807-8	8	T-REEL FG-1 IN
	RE-36,807-9	9	T-REEL CURRENT IN
	RE-36,807-10	10	GND(REEL CURRENT)
	RE-36,807-11	11	GND(REEL FG)
	RE-36,807-12	12	VCC(REEL FG)

207-13C
207-23B
207-25A
207-20B
207-20A
207-25B
207-21A
207-20C
207-24A
207-23C,207-24B
207-21B
207-19C

TBC-9PC CN101
EN-48P CN102
VO-18P CN103
MD-46P CN104
DEC-46P CN105
TBC-12PC CN108,107
TBC-7D CN108,109
DM-56PC CN110,111
DEC-42P CN112,113
AFM-1 CN202
AU-75P CN203
AU-76PC CN204
TC40PC CN205
SV-82PC CN206
SV-121 CN207
SV-122 CN208
DT-13PC CN209
DT-14PC CN210

MB-331(1/2)

TO FROM FRAME(4/5)(5/5)

Note;RE-28 means RE-28PC and SW-144 means SW-144PC in this frame wiring

FRAME(3/5)

BVW-85P(EK) ;#10001-

FRAME (4/5)

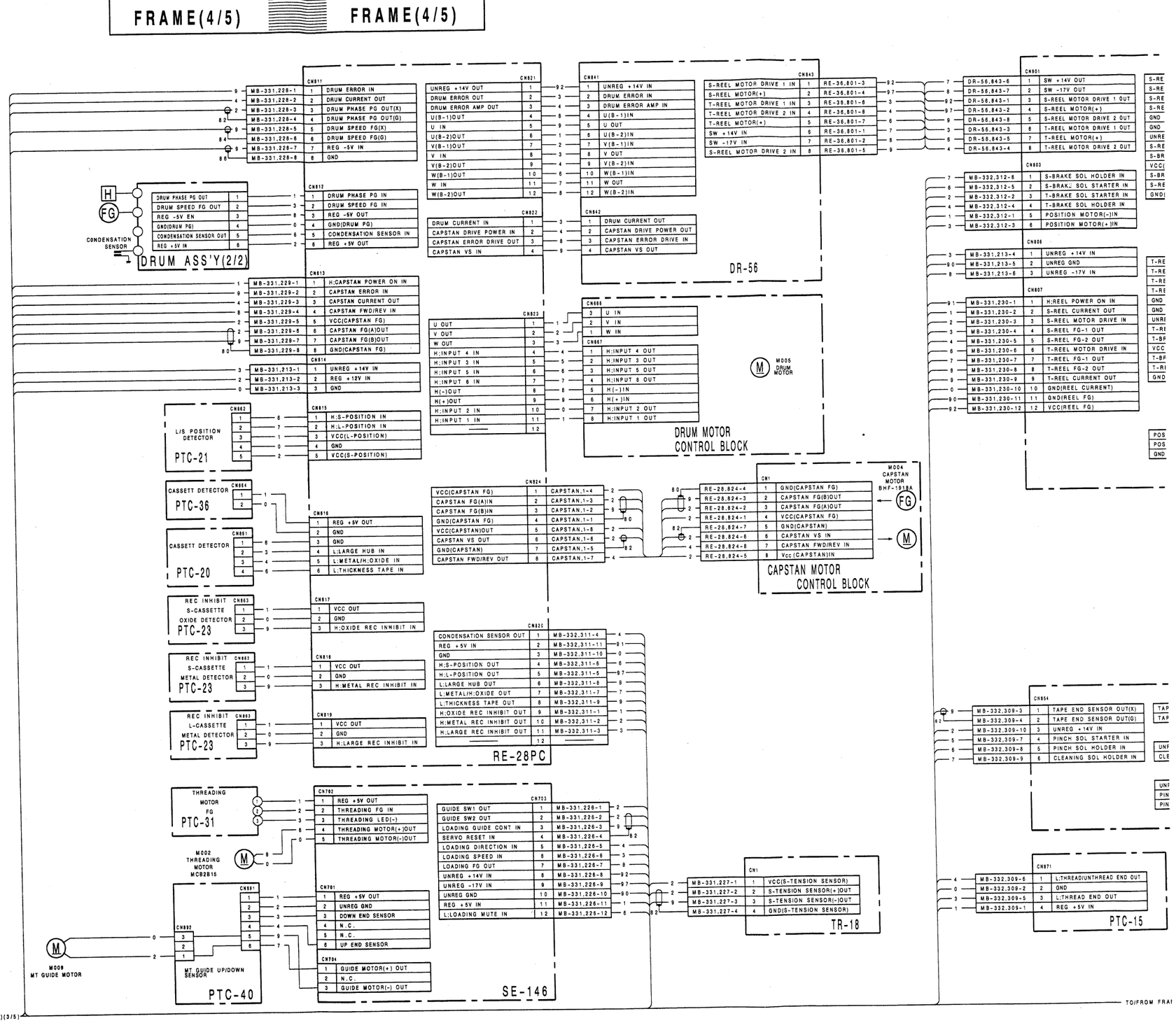
FRAME(4/5)
FRAME(4/5)
DRUM ASS'Y(2/2)
DR-56
DRUM MOTOR CONTROL BLOCK
M005 DRUM MOTOR
CAPSTAN MOTOR CONTROL BLOCK
M004 CAPSTAN MOTOR BHF-1818A
RE-28PC
SE-146
TR-18
PTC-15
PTC-21
PTC-36
PTC-20
PTC-23
PTC-31
PTC-40
M002 THREADING MOTOR MC82815
M009 MT GUIDE MOTOR
MT GUIDE UP/DOWN SENSOR
CONDENSATION SENSOR
L/S POSITION DETECTOR
CASSETT DETECTOR
REC INHIBIT S-CASSETTE OXIDE DETECTOR
REC INHIBIT S-CASSETTE METAL DETECTOR
REC INHIBIT L-CASSETTE METAL DETECTOR
THREADING MOTOR FG
TO/FROM FRAME(1/5)(2/5)(3/5)
TO/FROM FRAME(1/5)(2/5)(3/5)

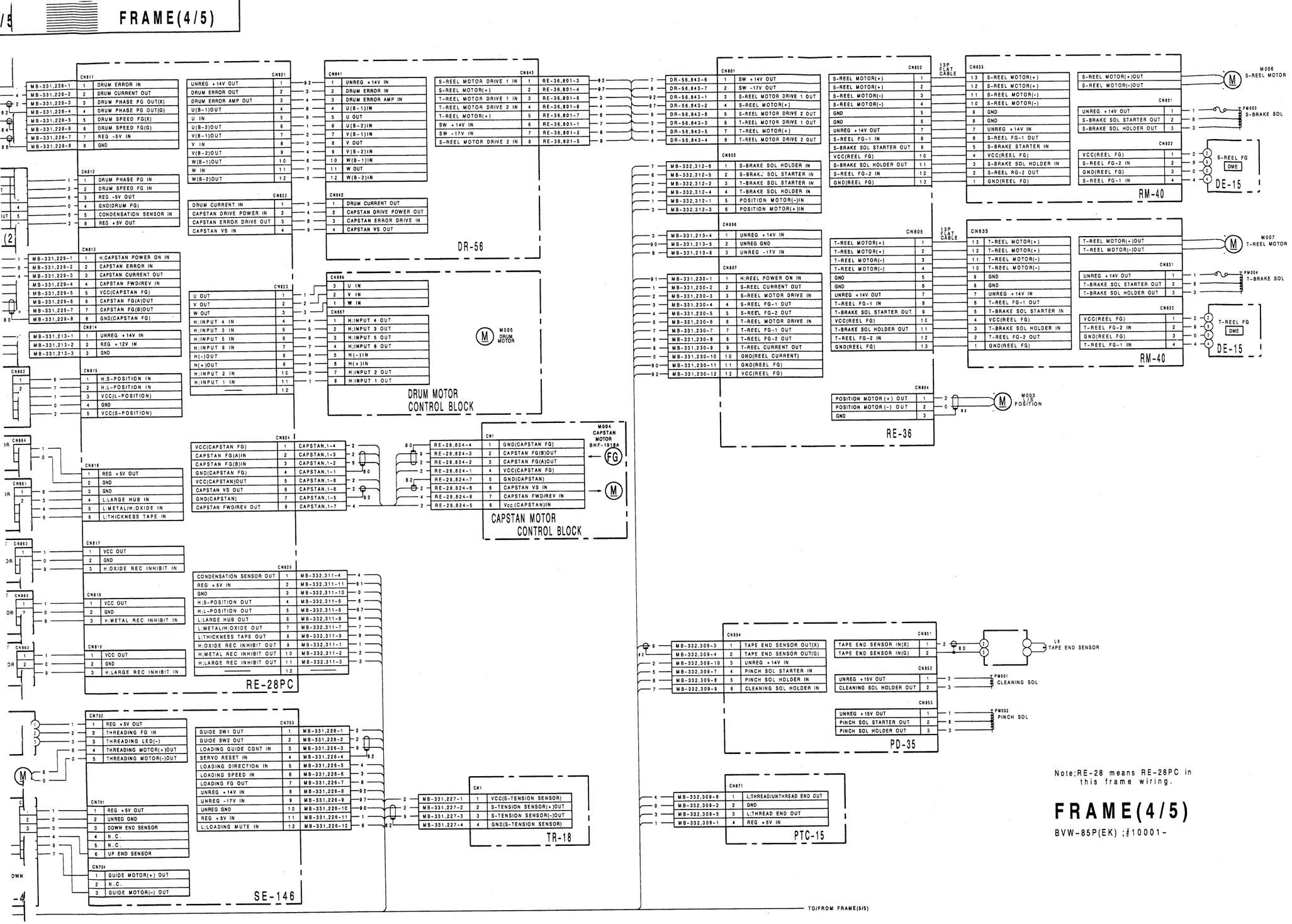

Note;RE-28 means RE-28PC in this frame wiring.

FRAME(4/5)

BVW-85P(EK) ;#10001-

FRAME (5/5)

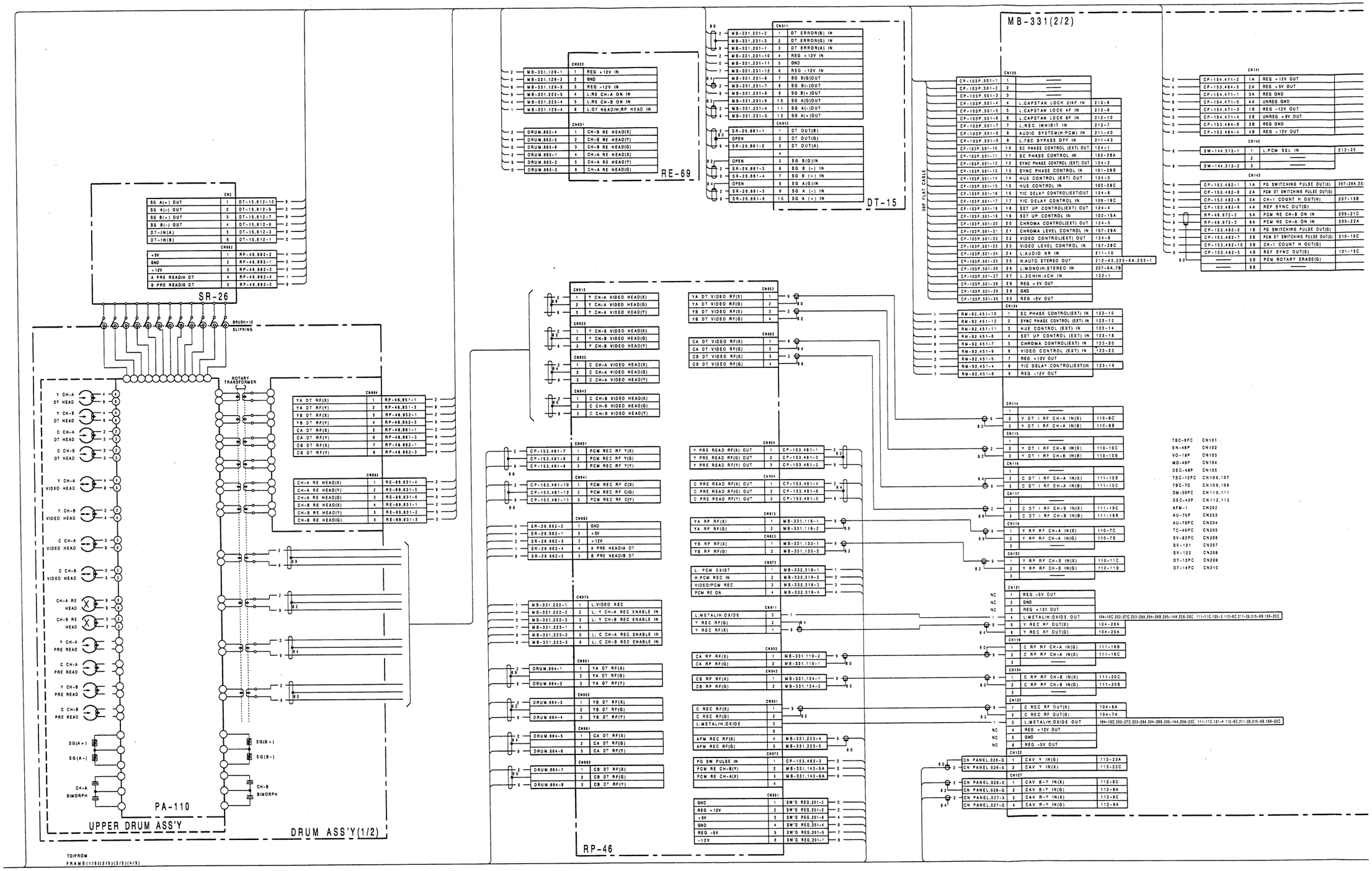

TBC-9PC CN101
EN-48P CN102
VO-19P CN103
MD-48P CN104
DEC-48P CN105
TBC-12PC CN106,107
TBC-7D CN108,109
DM-56PC CN110,111
DEC-42P CN112,113
AFM-1 CN202
AU-75P CN204
AU-76PC CN204
TC-40PC CN205
SV-82PC CN206
SV-121 CN207
SV-122 CN208
DT-13PC CN209
DT-14PC CN210

FRAME(5/5) FRAME(5/5)

CP-161

CP-101P

CP-154

SW'G REG (SOPS-1015)

SW'G REG (UR-21B)

AC-96

Note:SW-144 means SW-144PC and CP101 means CP101P in this frame wiring.

NOTE:
The shaded and ⚠-marked components are critical to safety.
Replace only with same components as specified.

FRAME(5/5)

BVW-85P(EK) ;#10001-

17-841

17-842

SECTION 18
SEMICONDUCTOR PIN ASSIGNMENT

ICs, transistors and diodes whoses functions are equivalent are described here. Therefore, incompatible device names may be described together. For parts replacement, refer to the Spare Parts section in this manual.

IC	PAGE
74F02PC	18-4
74F04PC	18-4
74F163APC	18-4
74F175PC	18-4
74F32PC	18-4
74F74PC	18-4
AM26LS30PC	18-5
AM26LS31CN	18-5
AM6685DL	18-5
AN3920K	18-5
AN3922NK	18-6
AN607P	18-6
AN608P	18-6
BX1152	18-6
BX1306	18-6
BX1343A	18-6
BX1460	18-7
BX1461	18-7
BX343	18-7
BX381	18-7
BX3914	18-7
BX3915A	18-7
BX3931A	18-7
CF77074NT	18-8
CX20061	18-8
CX20099	18-8
CX20111	18-8
CX20158	18-9
CX20158-1	18-9
CX20158-T3	18-9
CX20162	18-9
CX22013	18-9
CX22017	18-9
CX23028	18-10
CX23065	18-10
CX7907A	18-11
CX7912A	18-13
CX7913A	18-14
CX7930A	18-17
CX7993A	18-19
CX7998	18-20
CX877	18-20
CXA1020P	18-20
CXA1039M	18-21
CXA1040M	18-21
CXA1041M	18-21
CXA1077M	18-21
CXA1096M	18-21
CXD1023AQ	18-22
CXD1024Q	18-23
CXD1045AQ	18-24
CXD1095Q	18-25
CXD1131Q	18-26
CXD1217M	18-26
CXD8024Q	18-28
CXD8117P	18-29
CXK1202S	18-29
CXK5816M-12L	18-29
CXK5816PN-12L	18-30
CXK5864BP-12L	18-30
HA12411	18-31
LA7205	18-31
LM2903DQ	18-31
LM2903M	18-31
M50747H-250SP	18-32
M51958BL	18-33
M5215TL	18-33
M5236L	18-33
M54516P	18-33
M54523P	18-33
M54529AP	18-33
M54532P	18-33
MB4002PF	18-33
MB40778P	18-34
MB88303	18-34
MB88515B-280M	18-35
MB88525-190M	18-36
MBM2212-20P	18-37
MBM27C128-25	18-37
MC10198L	18-38
MC10H113M	18-38
MC10H116M	18-38
MC10H124M	18-38
MC10H125M	18-38
MC10H131M	18-38
MC14001BCP	18-38
MC14001BF	18-38
MC14011BCP	18-38
MC14011BF	18-38
MC14013BF	18-39
MC14016BCP	18-39
MC14016BF-T1	18-39
MC14023BF	18-39
MC14024BF	18-39
MC14028BF	18-39
MC14046BCP	18-40
MC14046BF	18-40
MC14050BCP	18-40
MC14052BF	18-40
MC14053BCP	18-40
MC14053BF	18-40
MC14066BF	18-39
MC14069UBCP	18-40
MC14069UBF	18-40
MC14070BCP	18-40
MC14070BF	18-40
MC14071BCP	18-40
MC14071BF	18-40
MC14075BF	18-41
MC14081BF	18-41
MC14538BCP	18-41
MC14538BF	18-41
MC14557BF	18-41
MC14584BF	18-41
MC34051P	18-41
MC34182M	18-42
MC34184M	18-42
MC74HC11F	18-42
MC74HC58N	18-42
MC74HC595N	18-42
MC74HC597N	18-42
MSL917RS	18-43
MSM5204ARS	18-43
NE5532P	18-44
NJM082M	18-44
NJM4558D-D	18-44
NJM4558D-FA	18-44
NJM78L05A	18-44
PA0009	18-44
RC1496M	18-45
RC2041MD	18-45
RC2043MD	18-45
RC4556D	18-45
RC4558DQ	18-44
RC4558M	18-44
RC4560M	18-45
RC4562DD	18-45
RC5532M	18-45
RC7805FA	18-45
RC7808FA	18-45
RC7809FA	18-45
RC78L05A	18-44
RC78L08A	18-44
RC78L09A	18-44
RC78M05FA	18-45
RC78M09FA	18-45
RC79L05A	18-46
RC79L08A	18-46
RC79M05FA	18-46
S-80230AG	18-46
S-8053ALR	18-46
S-81230AG	18-46
SBX1596-01	18-47
SBX4002-01	18-47
SN16913P	18-47
SN74265N	18-47
SN74HC00N	18-47
SN74HC00NS	18-47
SN74HC02N	18-47

IC	PAGE
SN74HC04N	18-48
SN74HC04NS	18-48
SN74HC04NS-T1	18-48
SN74HC05NS	18-48
SN74HC08N	18-48
SN74HC08NS	18-48
SN74HC11N	18-42
SN74HC138N	18-48
SN74HC138NS	18-48
SN74HC139N	18-48
SN74HC139NS	18-48
SN74HC14N	18-48
SN74HC14NS	18-48
SN74HC157N	18-48
SN74HC157NS	18-48
SN74HC161NS	18-49
SN74HC163NS	18-49
SN74HC174NS	18-49
SN74HC193NS	18-49
SN74HC240N	18-50
SN74HC240NS	18-50
SN74HC244N	18-50
SN74HC244NS	18-50
SN74HC245N	18-50
SN74HC245NS	18-50
SN74HC273NS	18-50
SN74HC30NS	18-50
SN74HC32N	18-50
SN74HC32NS	18-50
SN74HC368NS	18-50
SN74HC373N	18-51
SN74HC373NS	18-51
SN74HC4024NS	18-51
SN74HC4040NS	18-51
SN74HC4066NS	18-51
SN74HC573N	18-52
SN74HC574NS	18-52
SN74HC74NS	18-52
SN74HC74NS-T1	18-52
SN74HC86NS	18-52
SN74HCU04N	18-48
SN74HCU04NS	18-48
SN74LS00NS	18-52
SN74LS04NS	18-4
SN74LS06N	18-52
SN74LS06NS	18-52
SN74LS08NS	18-52
SN74LS11NS	18-52
SN74LS123N	18-53
SN74LS123NS	18-53
SN74LS157NS	18-53
SN74LS158NS	18-53
SN74LS163ANS	18-4
SN74LS164NS	18-53
SN74LS221NS	18-53
SN74LS244N	18-53
SN74LS245N	18-54
SN74LS32NS	18-4
SN74LS685NS	18-54

IC	PAGE
SN74LS697N	18-54
SN74LS74ANS	18-4
SN75107ANS	18-54
SN75179BP	18-54
TA7257P	18-55
TA7267P	18-55
TA7357AP	18-55
TA78L005AP	18-44
TC4016BPHB	18-39
TC4030BFHB	18-55
TC4050BF	18-40
TC4053BFHB	18-40
TC40H000F	18-55
TC40H032F	18-55
TC40H139F	18-55
TC40H163F	18-56
TC504013BF	18-56
TC504013BP	18-56
TC74HC123F	18-56
TC74HC221F	18-56
TC74HC4049F	18-56
TC74HC4050AP	18-56
TC74HC4050F	18-56
TC74HC4538AP	18-57
TD62901P	18-57
TL072ACP	18-57
TL082CP	18-57
TL082CPS	18-57
TL084CN	18-57
TL084CNS	18-57
TL431CLP	18-57
TL431CPS	18-57
TL601CPS	18-58
TL607CPS	18-58
TL610CPS	18-58
TLC548IP	18-58
TMPZ84C011AF-6	18-59
TMPZ84C30AP-6	18-60
TMPZ84C40AP-6	18-60
UPC1663G	18-61
UPC311G2	18-61
UPC319G2	18-61
UPC324C	18-61
UPC339G2	18-61
UPC393G2	18-31
UPC4558C	18-44
UPC4560G2-T1	18-45
UPC648C	18-61
UPC7905H	18-62
UPD42101G-3	18-62
UPD71054GB-3B4	18-62
UPD78310CW	18-63
UPD78312CW-608	18-64
UPD8251AFC	18-65

Transistor	PAGE
2SA1115-E	18-66
2SA1141-Q	18-66
2SA1156-2L	18-66
2SA1162G-TE85L	18-66
2SA1162Y-TE85L	18-66
2SA1175TP-F	18-66
2SA1226-T1E3	18-66
2SA1226-T1E4	18-66
2SA1319TP-T	18-66
2SA1413-L	18-66
2SA473-Y	18-66
2SA733-P	18-66
2SA768-Y	18-66
2SA812-T1M6	18-66
2SB1115A-T1YP	18-66
2SB649A-C	18-66
2SB731-F	18-66
2SB733-4	18-66
2SC1173-Y	18-66
2SC1623-T1L6	18-66
2SC2223-T1F13	18-66
2SC2223-T1F14	18-66
2SC2259-G	18-66
2SC2458-GR	18-66
2SC2458TP-GR	18-66
2SC2603-F	18-66
2SC2603TP-F	18-66
2SC2654-K	18-66
2SC2712G-TE85L	18-66
2SC2712L-TE85L	18-66
2SC2712Y-TE85L	18-66
2SC27150-TE85L	18-66
2SC2715Y-TE85L	18-66
2SC2754-Y	18-66
2SC2757-T1T33	18-66
2SC2785TP-E	18-66
2SC2785TP-K	18-66
2SC2878-B	18-66
2SC2901-L	18-66
2SC3012-Q	18-66
2SC3326N-TE85L-A	18-66
2SC3326N-TE85L-B	18-66
2SC3632-K	18-66
2SC403SP-5	18-66
2SD1055-R	18-66
2SD1615A-T1GP	18-66
2SD773-4	18-66
2SD774-4	18-66
2SD788-4	18-66
2SD809-F	18-66
2SD999-T1CL	18-66
2SK152-4	18-66
2SK209Y-TE85L	18-67
2SK389-V	18-67
2SK94-T1X3	18-67
2SK94-T1X4	18-67

Transistor	PAGE
DTA114EK-T146	18-67
DTA114TK-T146	18-67
DTA124EK	18-67
DTA124EK-T146	18-67
DTA124ES	18-67
DTA124XS-TP	18-67
DTA144EK-T146	18-67
DTB123EK-T-146	18-67
DTC114EK-T146	18-67
DTC124ES	18-67
DTC124XK-T146	18-67
DTC124XS-TP	18-67
DTC144EF	18-67
DTC144EK-T146	18-67
DTC144ES	18-67
DTC144WK-T146	18-67
TX-429M	18-67

Diode	PAGE
10E-2	18-67
10E2-TA2B	18-67
1S2076	18-67
1S2835-T1	18-67
1S2837-T1	18-67
1SS119	18-67
1SS119TD	18-67
1SS123-T1	18-67
1SS148-TP7	18-67
1SS97-0	18-67
1SS99	18-67
1SS99-1	18-67
DM-211	18-67
ERB44-08	18-67
FC51M	18-67
FC52M	18-67
FC53M	18-67
FC54M	18-67
GL-5HD5	18-67
HZ2ALL	18-68
HZ4ALLTP	18-68
HZ6A1LTP	18-68
HZ6C1LTP	18-68
HZ9A2L	18-68
LB402VK	18-68
LN25RP	18-68
LN35BP	18-68
RD10M-T1B2	18-68
RD11ESB2	18-68
RD11M-T1B2	18-68
RD15M-T1B2	18-68
RD2.0ES-T1B	18-68
RD2.4M-T1B	18-68
RD2.7ESB	18-68
RD3.3ES-T1B1	18-68
RD3.3M-T1B2	18-68
RD3.9E-B	18-68
RD3.9ES-T1B	18-68
RD3.9M-T1B2	18-68
RD4.7M-T1B2	18-68
RD5.1EB1	18-68
RD5.1M-T1B2	18-68
RD6.2ESB3	18-68
RD6.2M-T1B2	18-68
RD6.8EB1	18-68
RD6.8M-T1B2	18-68
RD7.5ESB	18-68
RD8.2ES-T1B2	18-68
TLG256	18-68
TLUG154	18-68
TLUR144	18-68
TLY256	18-68

C

74F04PC (FSC)
SN74LS04NS (TI) FLAT PACKAGE

TTL INVERTER
- TOP VIEW -

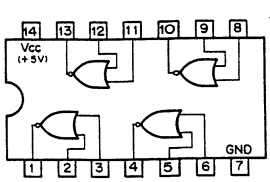

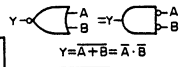

$Y=\overline{A+B}=\overline{A}\cdot\overline{B}$

A	B	Y
0	0	1
0	1	0
1	0	0
1	1	0

0:LOW LEVEL
1:HIGH LEVEL

74F02PC (FSC)

TTL 2-INPUT POSITIVE-NOR GATE
- TOP VIEW -

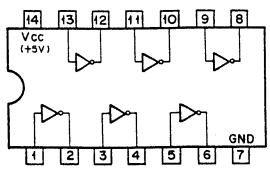

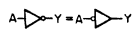

$Y=\overline{A}$

A	Y
0	1
1	0

0:LOW LEVEL
1:HIGH LEVEL

74F163APC (FSC)
SN74LS163ANS (TI) FLAT PACKAGE

TTL PRESETTABLE SYNCHRONOUS 4-BIT BINARY COUNTER
- TOP VIEW -

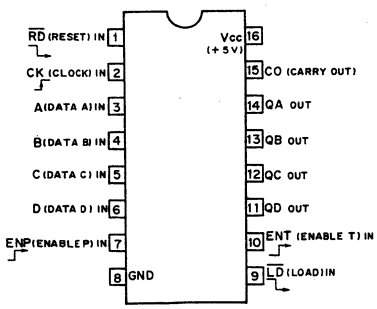

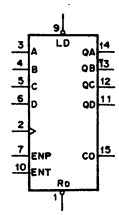

MODE SELECTION

CONTROL INPUTS				MODE
$\overline{RD}$	$\overline{LD}$	ENP	ENT	
0	X	X	X	RESET (SYNCHRONOUS)
1	0	X	X	PRESET (SYNCHRONOUS)
1	1	0	X	NO COUNT
1	1	X	0	NO COUNT
1	1	1	1	COUNT

0;LOW LEVEL
1;HIGH LEVEL
X;DON'T CARE

CARRY OUTPUT "CO"

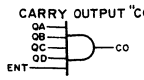

CO IS HIGH WHEN ENT INPUT IS HIGH AND COUNT IS "15".

COUNT SEQUENCE

COUNT	OUTPUTS			
	QD	QC	QB	QA
0	0	0	0	0
1	0	0	0	1
2	0	0	1	0
3	0	0	1	1
4	0	1	0	0
5	0	1	0	1
6	0	1	1	0
7	0	1	1	1
8	1	0	0	0
9	1	0	0	1
10	1	0	1	0
11	1	0	1	1
12	1	1	0	0
13	1	1	0	1
14	1	1	1	0
15	1	1	1	1

74F175PC (FSC)

TTL D-TYPE FLIP-FLOP WITH CLEAR
- TOP VIEW -

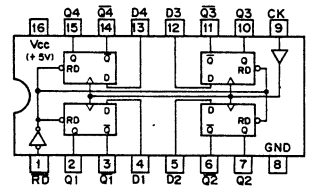

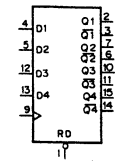

$\overline{RD}$	CK	D	Q	$\overline{Q}$
0	X	X	0	1
1	↑	1	1	0
1	↑	0	0	1
1	0	X	Q_0	$\overline{Q}_0$

0;LOW LEVEL
1;HIGH LEVEL
X;DON'T CARE

74F32PC (FSC)
SN74LS32NS (TI) FLAT PACKAGE

TTL 2-INPUT POSITIVE-OR GATE
- TOP VIEW -

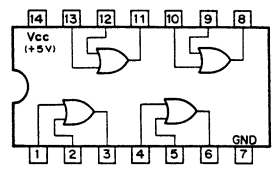

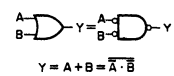

$Y=A+B=\overline{\overline{A}\cdot\overline{B}}$

A	B	Y
0	0	0
0	1	1
1	0	1
1	1	1

0:LOW LEVEL
1:HIGH LEVEL

74F74PC (FSC)
SN74LS74ANS (TI) FLAT PACKAGE

TTL D-TYPE FLIP FLOP WITH DIRECT SET/RESET
- TOP VIEW -

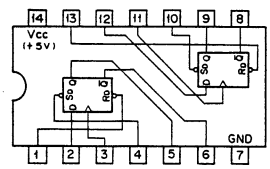

INPUTS				OUTPUTS	
$\overline{Sp}$	$\overline{Rp}$	CK	D	Qn+1	$\overline{Qn+1}$
0	1	X	X	1	0
1	0	X	X	0	1
0	0	X	X	1*	1*
1	1	↑	1	1	0
1	1	↑	0	0	1
1	1	0	X	Qn	$\overline{Qn}$

0;LOW LEVEL
1;HIGH LEVEL
X;DON'T CARE
1*;NONSTABLE

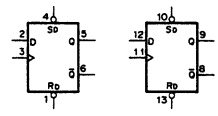

AM26LS30PC (ADVANCED MICRO DEVICES)

LINE DRIVER
– TOP VIEW –

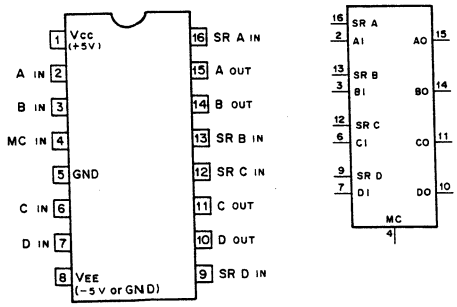

MC ; MODE CONTROL
SR ; SLEW RATE CONTROL

MC=1

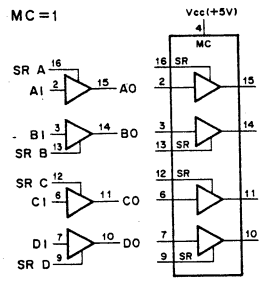

INPUTS		OUTPUTS
MC	A TO D	A TO D
1	0	0
1	1	1

0 ; LOW LEVEL
1 ; HIGH LEVEL

MC=0

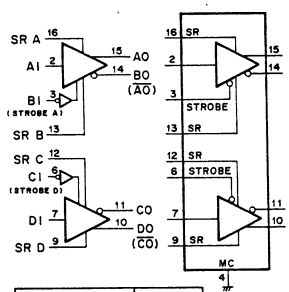

INPUTS			OUTPUTS	
MC	STROBE	A & D	A & D	B & C
0	0	0	0	1
0	0	1	1	0
0	1	X	HI-Z	HI-Z

X ; DON'T CARE
HI-Z ; HIGH IMPEDANCE

AM26LS31CN (TI)

HIGH SPEED DIFFERENTIAL LINE DRIVER
– TOP VIEW –

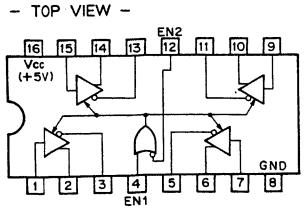

FUNCTION TABLE

EN2	EN1	OUTPUT
0	0	ENABLE
0	1	ENABLE
1	0	HI-Z
1	1	ENABLE

0 ; LOW LEVEL
1 ; HIGH LEVEL
HI-Z ; HIGH IMPEDANCE

AM6685DL (ADVANCED MICRO DEVICES)

VOLTAGE COMPARATOR
(BUILT-IN LATCH)
– TOP VIEW –

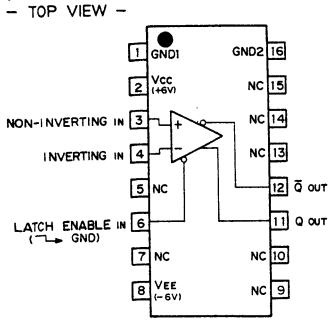

AN3920K (MATSUSHITA)

VTR FM AUDIO RF AMP
– TOP VIEW –

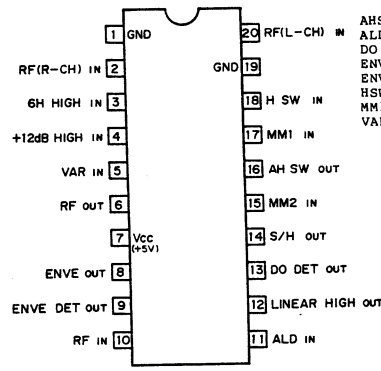

AHSW	; AUDIO HOLD SWITCH OUTPUT
ALD	; AUTO LINEAR DETECT INPUT
DO DET	; DROP OUT DETECT OUTPUT
ENVE	; ENVELOPE OUTPUT
ENVE DET	; ENVELOPE DETECTOR OUTPUT
HSW	; HOLD SWITCH INPUT
MM1,2	; MONO MULTI
VAR	; VARIABLE AMP CONTROL INPUT

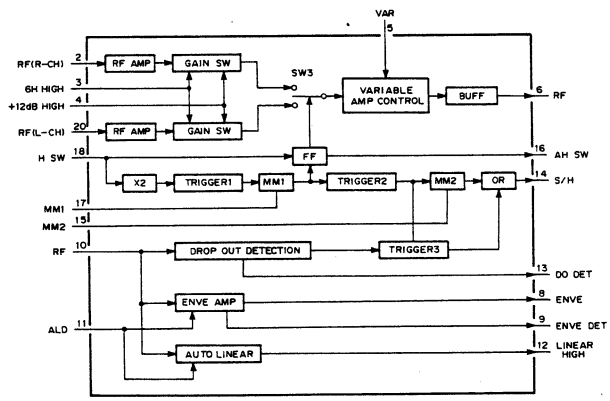

AN3922NK (MATSUSHITA)

VTR, FM AUDIO MODULATOR AND DEMODULATOR
– TOP VIEW –

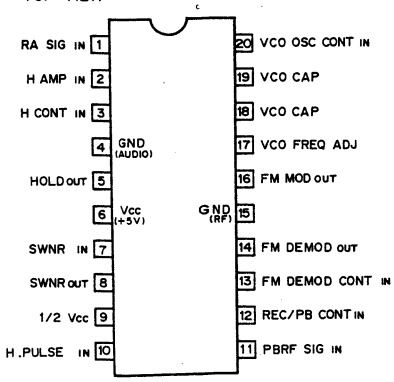


```
FM DEMOD        ; FM DEMODULATION OUTPUT
FM DEMOD CONT   ; FM DEMODULATION CONTROL INPUT
FM MOD          ; FM MODULATION OUTPUT
H AMP           ; HOLD AMP INPUT
H CONT          ; HOLD CONTROL INPUT
H PULSE         ; HOLD PULSE INPUT
PBRF SIG        ; PB RF SIGNAL INPUT
RA SIG          ; REC AUDIO SIGNAL INPUT
REC/PB CONT     ; REC/PB CONTROL INPUT
SWNR            ; SWITCH NOISE REDUCTION INPUT/OUTPUT
VCO CAP         ; VCO CAPACITOR
VCO FREQ ADJ    ; VCO FREQUENCY ADJUSTMENT
VCO OSC CONT    ; VCO OSCILLATION CONTROL INPUT
```

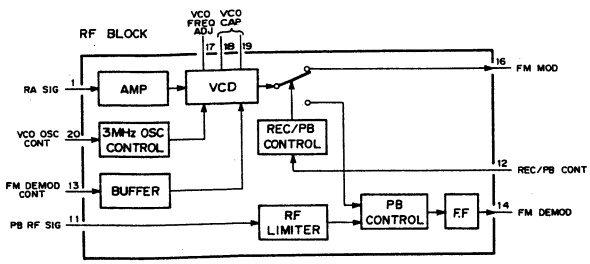

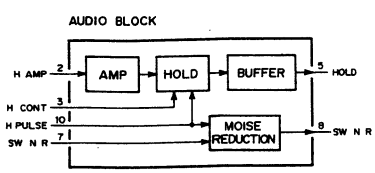

BX1152 (SONY)

DOLBY (C TYPE) NOISE REDUCTION SYSTEM
– REAR VIEW –

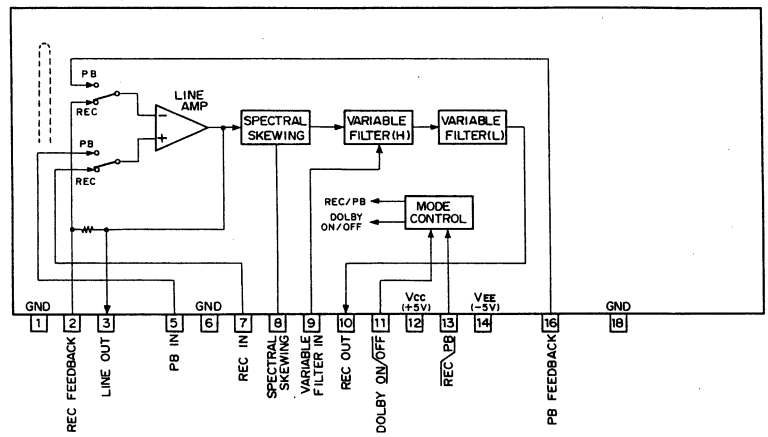

BX1306 (SONY)

VIDEO AND RF SWITCH
– SIDE VIEW –

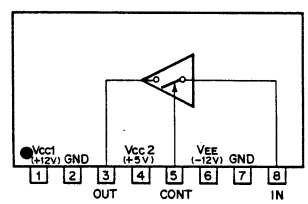

AN607P (MATSUSHITA)
AN608P (MATSUSHITA)

WIDE BAND AMPLIFIER
– PRINTED SIDE VIEW –

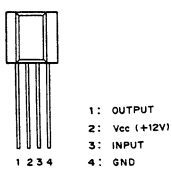

BX-1343A (SONY)

ACTIVE LOW-PASS FILTER
– IMPRINTED SIDE VIEW –

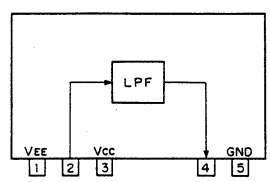

BX1460 (SONY)

PHASE SHIFTER

– PRINTED SIDE VIEW –

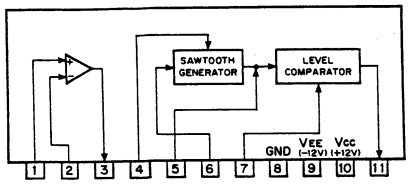

BX1461 (SONY)

PHASE DETECTOR

– PRINTED SIDE –

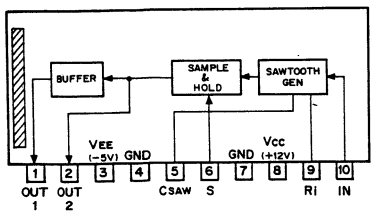

BX343 (SONY)

OSCILLATOR/DETECTOR

– REAR VIEW –

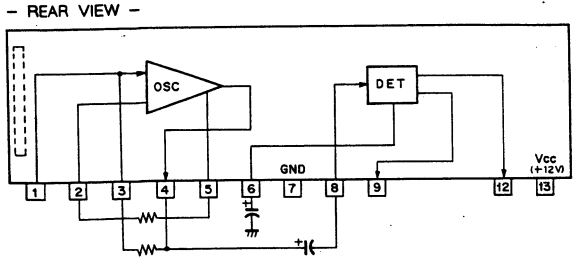

BX381 (SONY)

PHASE COMPARATOR

– SIDE VIEW –

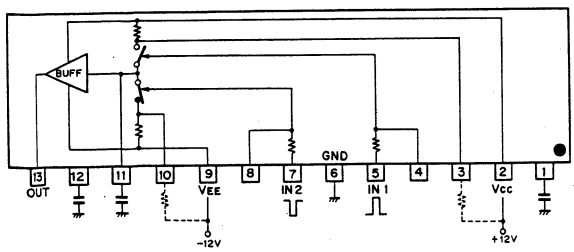

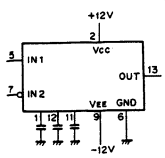

BX3914 (SONY)

CTL REC/PB AMPLIFIER

– PRINTED SIDE –

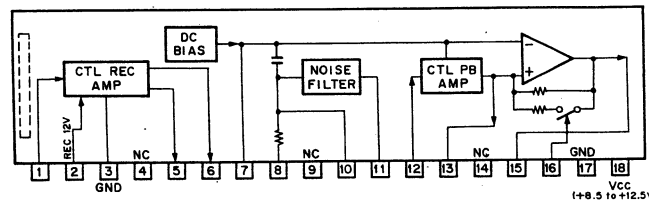

BX3915A (SONY)

SYNC SEPARATOR

– PRINTED SIDE –

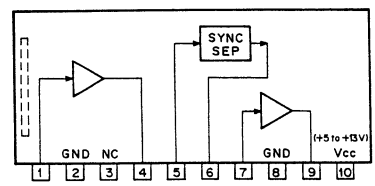

BX3931A (SONY)

HYBRID VIDEO WIDEBAND BUFFER AMPLIFIER

– IMPRINTED SIDE –

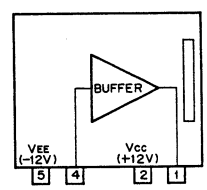

CF77074NT (TI)

CLOCK COUNTER

– TOP VIEW –

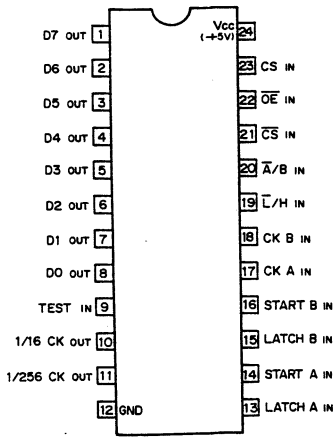

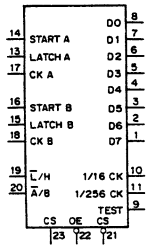

A/B ; DATA LATCH A/B SELECT INPUT

CKA,CKB; CLOCK INPUT (↓ → COUNT UP, ↓ → LATCH)

CS ; CHIP SELECT INPUT

D0-D7 ; DATA OUTPUT

L/H ; DATA LATCH LOW/HIGH SELECT INPUT

OE ; OUTPUT ENABLE INPUT

MODE SELECT

INPUT					OUTPUT
CS	$\overline{CS}$	$\overline{OE}$	A/B	L/H	D0–D7
0	X	X	X	X	HI-Z
1	0	0	0	0	LATCH A LOW BYTE
1	0	0	0	1	LATCH A HIGH BYTE
1	0	0	1	0	LATCH B LOW BYTE
1	0	0	1	1	LATCH B HIGH BYTE
X	1	X	X	X	HI-Z
X	X	1	X	X	

0; LOW LEVEL
1; HIGH LEVEL
X; DON'T CARE
HI-Z; HIGH IMPEDANCE

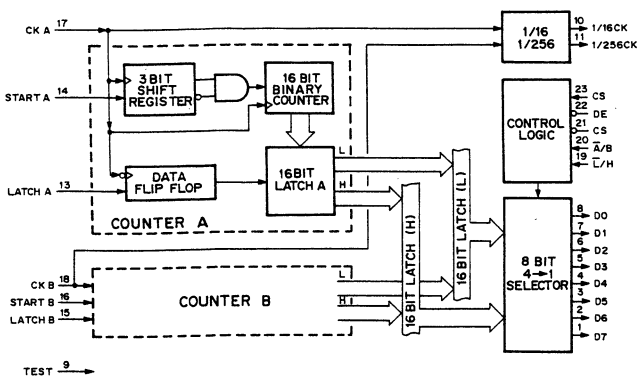

CX20061 (SONY)

ANALOG SWITCH

– SIDE VIEW –

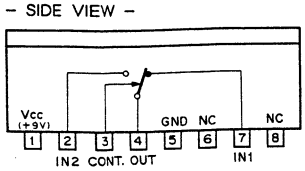

CONT.	SW
0	
1	

0; LOW LEVEL
1; HIGH LEVEL

CX20099 (SONY) FLAT PACKAGE

VOLTAGE CONTROLLED AMP/DETECTOR/MAIN OPERATIONAL AMP

– TOP VIEW –

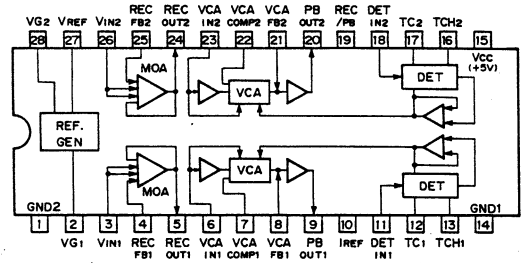

DET ; DETECTOR
TC ; TIME CONSTANT
TCH; TIME CONSTANT HOLD
VCA ; VOLTAGE CONTROLLED AMP

CX20111 (SONY) FLAT PACKAGE

FM/AM FRONT-END/IF/DET PROCESSOR

– TOP VIEW –

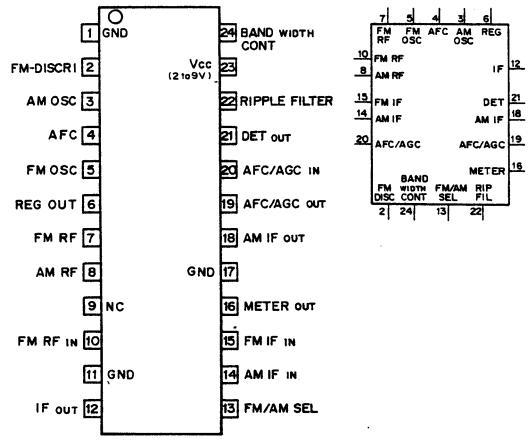

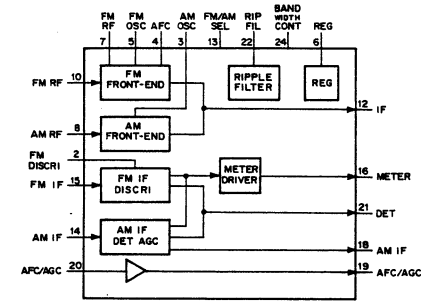

CX20158 (SONY) FLAT PACKAGE
VIDEO SWITCHER AND BUFFER
– TOP VIEW –

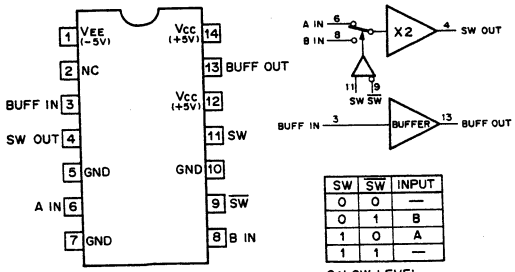

SW	$\overline{SW}$	INPUT
0	0	—
0	1	B
1	0	A
1	1	—

0;LOW LEVEL
1;HIGH LEVEL
–;INDEFINITE

CX22013 (SONY)
DYNAMIC COMB FILTER
– TOP VIEW –

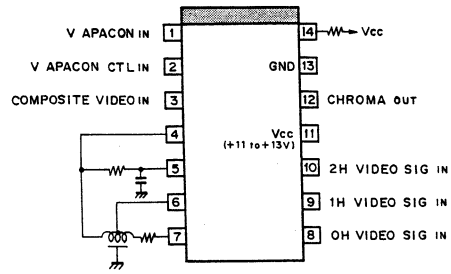

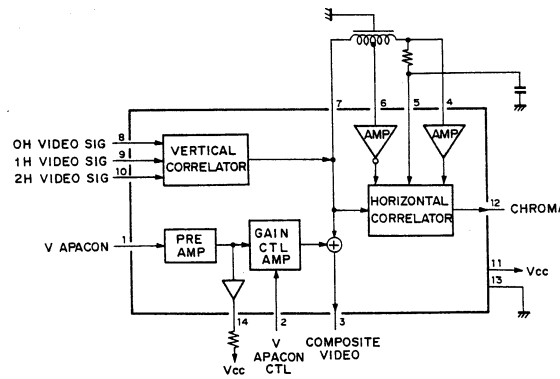

CX20162 (SONY)
BIPOLAR/TTL VERTICAL BLANKING WIDTH CONTROLLER
– TOP VIEW –

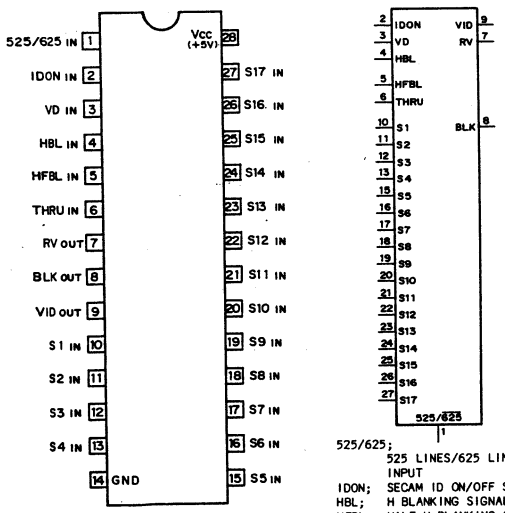

525/625;
525 LINES/625 LINES SETTING INPUT
IDON; SECAM ID ON/OFF SIGNAL INPUT
HBL; H BLANKING SIGNAL INPUT
HFBL; HALF H BLANKING SIGNAL INPUT
THRU; FORCIBLE BLANKING SIGNAL INPUT
S1-S17;
BLANKING LINE SELECTION SWITCH INPUTS
RV; 14TH LINE TIMING SIGNAL OUTPUT
BLK; BLANKING SIGNAL OUTPUT
VID; SECAM ID TIMING SIGNAL OUTPUT

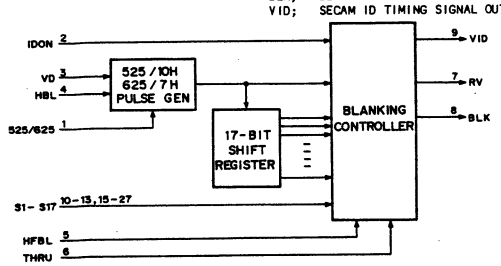

CX22017 (SONY)
VIDEO SIGNAL PROCESSOR
– TOP VIEW –

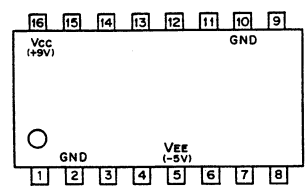

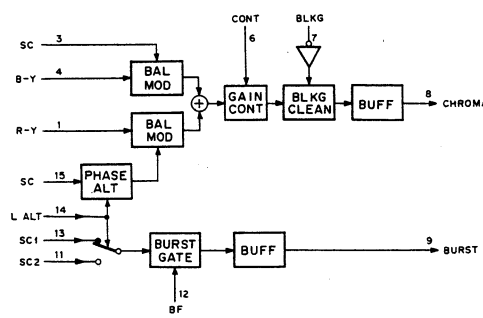

CX23028 (SONY)

C-MOS SYNCHRONOUS ROTATIONAL DIRECTION DETECTOR
– TOP VIEW –

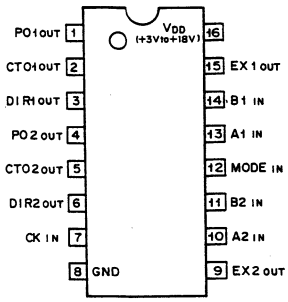

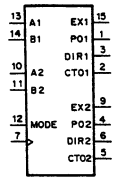

A, B ; SIGNAL INPUTS
EX ; A⊕B
PO ; A⊕B (SYNCHRONOUS)
DIR ; DIRECTION OUTPUT
CTO ; COUNT PULSE OUTPUT
MODE ; DIR1 & CTO1 MODE SELECT
⊕ ; EXCLUSIVE-OR

MODE = "1"

DIRECTION OUTPUT "DIR"

INPUTS	DIR
A∠B	1
B∠A	0

TIMING CHART "CTO"

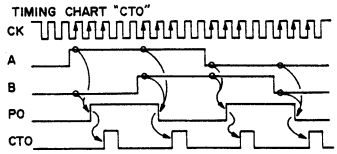

MODE = "0"

DIRECTION OUTPUT "DIR"

INPUTS		DIR 1	DIR 2
CH1	CH2		
A1∠B1	A2∠B2	1	THE SAME FUNCTION OF MODE "1"
B1∠A1	A2∠B2	OUTPUT "1" AND "0" ALTERNATELY	
A1∠B1	B2∠A2		
B1∠A1	B2∠A2	0	

CTO 1 ; CTO 1 with MODE "0" = CTO 1 with MODE "1" + CTO 2
CTO 2 ; THE SAME FUNCTION OF MODE "1"

1 ; HIGH LEVEL
0 ; LOW LEVEL
A∠B ; THE PHASE OF SIGNAL A IS IN ADVANCE FOR THE PHASE OF B.

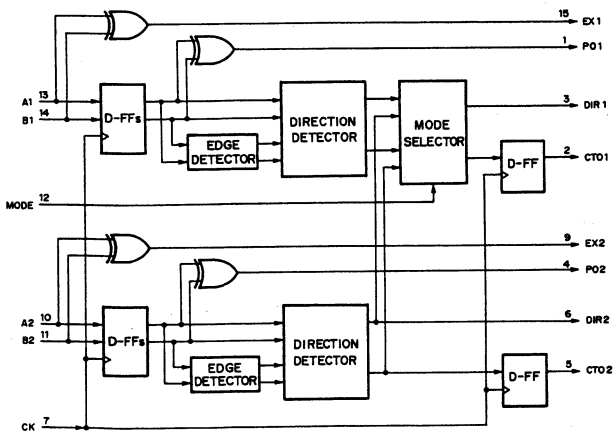

CX23065 (SONY)

N-MOS PHASE COMPARATOR WITH INVERSION AMPLIFIER
– PRINTED SIDE VIEW –

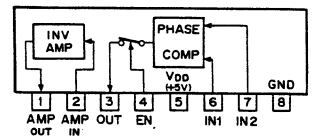

EN	OUT
1	ACTIVE
0	HIGH IMPEDANCE

1; HIGH LEVEL
0; LOW LEVEL

TIMING CHART

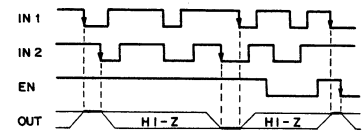

HI-Z ; HI-IMPEDANCE

CX7907A (SONY)

C-MOS TIME CODE GENERATOR

– TOP VIEW –

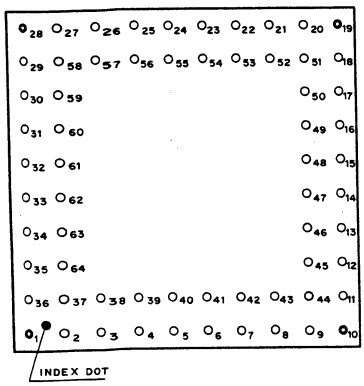

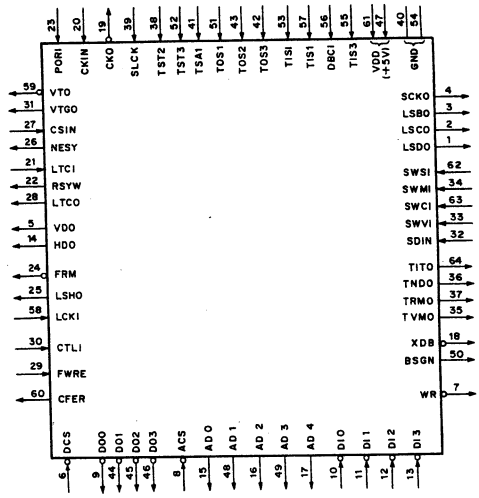

PIN ASSIGNMENT

Pin No.	IN	OUT	SYMBOL
1		o	LSDO
2		o	LSCO
3		o	LSBO
4		o	SCKO
5		o	VDO
6	o		DCS
7		o	WR
8	o		ACS
9		o	DO0
10	o		DI0
11	o		DI1
12	o		DI2
13	o		DI3
14		o	HDO
15		o	AD0
16		o	AD2

Pin No.	IN	OUT	SYMBOL
17		o	AD4
18		o	XDB
19		o	CKO
20	o		CKIN
21	o		LTCI
22		o	RSYW
23	o		PORI
24		o	FRM
25		o	LSHO
26		o	NESY
27	o		CSIN
28		o	LTCO
29	o		FWRE
30	o		CTLI
31		o	VTGO
32	o		SDIN

Pin No.	IN	OUT	SYMBOL
33	o		SWVI
34	o		SWMI
35		o	TVMO
36		o	TNDO
37		o	TRMO
38	o		TST2
39	o		SLCK
40		o	GND
41	o		TSAI
42	o		TOS3
43	o		TOS2
44		o	DO1
45		o	DO2
46		o	DO3
47	o		VDD(+5V)
48		o	AD1

Pin No.	IN	OUT	SYMBOL
49		o	AD3
50		o	BSGN
51	o		TOS1
52	o		TST3
53	o		TISI
54		o	GND
55	o		TIS3
56	o		DBCI
57	o		TIS1
58	o		LCKI
59		o	VTO
60		o	CFER
61	o		VDD(+5V)
62	o		SWSI
63	o		SWCI
64		o	TITO

BLOCK DIAGRAM

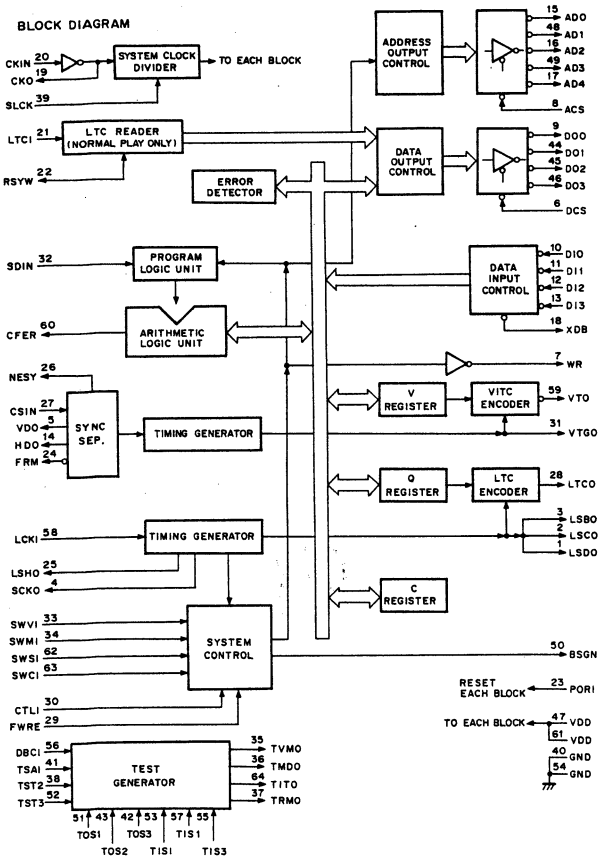

FUNCTIONAL PIN DEFINITION

Pin No.	SYMBOL	DESCRIPTION
8	ACS	ADDRESS LINE CHIP SELECT INPUT
15	AD0	ADDRESS DATA OUTPUT
48	AD1	
16	AD2	
49	AD3	
17	AD4	
50	BSGN	BUSY GENERATOR OUTPUT
60	CFER	COLOR FRAME ERROR FLAG OUTPUT
20	CKIN	SYSTEM CLOCK INPUT
19	CKO	CLOCK OUTPUT
27	CSIN	COMPOSITE SYNC INPUT
30	CTLI	CTL(TIMER) SIGNAL INPUT ($\overline{CTL}$)
6	DCS	DATA LINE CHIP SELECT INPUT (NEGATIVE-LOGIC)
10	DI0	DATA BUS INPUT (NEGATIVE-LOGIC)
11	DI1	
12	DI2	
13	DI3	
9	DO0	DATA BUS OUTPUT (NEGATIVE-LOGIC)
44	DO1	
45	DO2	
46	DO3	
24	FRM	FRAME SIGNAL OUTPUT (NEGATIVE-LOGIC)
29	FWRE	CTL DIRECTION INPUT
14	HDO	HORIZONTAL SYNC DRIVE OUTPUT
58	LCKI	LTC CLOCK INPUT (SMPTE 9.6kHz/EBU 8kHz)
3	LSBO	LTC SYNCHRONOUS SIGNAL B OUTPUT
2	LSCO	LTC SYNCHRONOUS SIGNAL C OUTPUT
1	LSDO	LTC SYNCHRONOUS SIGNAL D OUTPUT
25	LSHO	LTC SYNCHRONOUS SIGNAL H OUTPUT
21	LTCI	LTC INPUT
28	LTCO	LTC SIGNAL OUTPUT
26	NESY	LOST-SYNC FLAG OUTPUT
23	PORI	POWER ON RESET INPUT
22	RSYW	READ SYNC WORD OUTPUT
4	SCKO	SWITCHES SIGNAL IN CLOCK OUTPUT
32	SDIN	SERIAL DATA INPUT
39	SLCK	SELECT CLOCK INPUT
63	SWCI	SWITCHES SIGNAL C INPUT
34	SWMI	SWITCHES SIGNAL M INPUT
62	SWSI	SWITCHES SIGNAL S INPUT
33	SWVI	SWITCHES SIGNAL V INPUT
5	VDO	VERTICAL SYNC DRIVE OUTPUT
31	VTGO	VITC GATE SIGNAL OUTPUT
59	VTO	VITC SIGNAL OUTPUT (NEGATIVE-LOGIC)
7	WR	WRITE SIGNAL OUTPUT (NEGATIVE-LOGIC)
18	XDB	EXTERNAL DATA BUS IN FLAG OUTPUT (NEGATIVE-LOGIC)
47	VDD	POWER LINE (+5V)
61	VDD	
40	GND	GND LINE
54	GND	
56	DBCI	TEST INPUT (TO BE CONNECTED WITH GND)
57	TIS1	
55	TIS3	
53	TISI	
51	TOS1	
43	TOS2	
42	TOS3	
41	TSAI	
38	TST2	
52	TST3	
64	TITO	TEST OUTPUT (TO BE LEFT OPEN)
36	TNDO	
37	TRMO	
35	TVMO	

C

#32 SDIN

LSDO	LSCO	LSBO	SDIN	FUNCTION
0	0	0	⌐	INCREASE IN BIT 'FR or U1'
0	0	1		INCREASE IN BIT 'FT or U2'
0	1	0		INCREASE IN BIT 'SE or U3'
0	1	1		INCREASE IN BIT 'ST or U4'
1	0	0	⌐	INCREASE IN BIT 'MN or U5'
1	0	1		INCREASE IN BIT 'MT or U6'
1	1	0		INCREASE IN BIT 'HR or U7'
1	1	1		INCREASE IN BIT 'HT or U8'

NOTE;INFLUENCED BIT IS DECIDED BY FIRST 2 BITS OF SWCI.

#33 SWVI

LSDO	LSCO	LSBO	SWVI	FUNCTION
0	0	0	SW1A†	VITC POSITION SELECT A
0	0	1	SW1B†	
0	1	0	SW1C†	
0	1	1	SW1D†	
1	0	0	SW2A†	VITC POSITION SELECT B
1	0	1	SW2B†	
1	1	0	SW2C†	
1	1	1	SW2D†	

†;VITC POSITION SELECT

SW1D SW2D	SW1C SW2C	SW1B SW2B	SW1A SW2A	INSERTION LINE NTSC	INSERTION LINE PAL,SECAM
0	0	0	0	LINE 25	LINE 22,335
0	0	0	1	24	21,334
0	0	1	0	23	20,333
0	0	1	1	22	19,332
0	1	0	0	21	18,331
0	1	0	1	20	17,330
0	1	1	0	19	16,329
0	1	1	1	18	15,328
1	0	0	0	17	14,327
1	0	0	1	16	13,326
1	0	1	0	15	12,325
1	0	1	1	14	11,324
1	1	0	0	13	10,323
1	1	0	1	12	9,322
1	1	1	0	11	8,321
1	1	1	1	10	7,320

#34 SWMI

LSDO	LSCO	LSBO	SWMI	FUNCTION
0	0	0	x	INSERT SWMI DATA INTO BIT 'AS1'(NEGATIVE-LOGIC)
0	0	1	x	INSERT SWMI DATA INTO BIT 'AS2'(NEGATIVE-LOGIC)
0	1	0	x	INSERT SWMI DATA INTO BIT 'AS3'(NEGATIVE-LOGIC)
0	1	1	x	INSERT SWMI DATA INTO BIT 'AS4'(NEGATIVE-LOGIC)
1	0	0	x	INSERT SWMI DATA INTO BIT 'AS5'(NEGATIVE-LOGIC)
1	0	1	x	INSERT SWMI DATA INTO BIT 'AS6'(NEGATIVE-LOGIC)
1	1	0	∫	COLOR FRAME LOCK IN FIELD 1
1	1	1	0	COLOR FRAME OFF
1	1	1	1	COLOR FRAME ON

X;DON'T CARE.

#62 SWSI

LSDO	LSCO	LSBO	SWSI	FUNCTION
0	0	0	FBS1*	VITC FIELD MARK/ LTC PHASE CORRECTION POSITION SELECT
0	0	1	FBS2*	
0	1	0	FBS3*	
0	1	1	0	PHASE CORRECTION ON
0	1	1	1	PHASE CORRECTION OFF
1	0	0	S1**	SIGNAL FORMAT SELECT
1	0	1	S2**	
1	1	0	S4**	
1	1	1	x	-

x;DON'T CARE.

*;VITC FIELD MARK/LTC PHASE CORRECTION POSITION SELECT

FBS3	FBS2	FBS1	FIELD MARK POSITION	LTC BIT No.
0	0	0	AS1	10
0	0	1	AS2	11
0	1	0	AS3	27
0	1	1	AS4	43
1	0	0	AS5	58
1	0	1	AS6	59
1	1	0	-	-
1	1	1	-	-

NOTE;LTC PHASE CORRECTION BIT OF CX7907 IS FIXED ON BIT-63.

**;SIGNAL FORMAT SELECT

S4	S2	S1	FORMAT	FRAME
0	0	0	FILM	24
0	0	1	NOT ALLOWED	-
0	1	x		
1	0	0	PAL,SECAM	25
1	0	1	NOT ALLOWED	-
1	1	0	NTSC NDF	30
1	1	1	NTSC DF	30

DF;DROP FRAME
NDF;NON DROP FRAME
x;DON'T CARE.

0;LOW LEVEL
1;HIGH LEVEL

#63 SWCI

LSDO	LSCO	LSBO	SWCI	FUNCTION	
0	0	0	0	U-BIT	IN/OUT DATA SELECT*1
0	0	0	1	TIME	
0	0	1	0	CTL	
0	0	1	1	TIME/U-BIT	
0	1	0	x	-	
0	1	1	0	DATA RESET ON*2	
0	1	1	1	DATA RESET OFF	
1	0	0	0	TIME DATA HOLD	
1	0	0	1	TIME DATA RUN	
1	0	1	⌐	EXTERNAL DATA LOAD*2	
1	1	0	0	EXTRAPOLATION ON	
1	1	0	1	EXTRAPOLATION OFF	
1	1	1	x	-	

x; DON'T CARE.
*1;REFER TO TIMING CHART(DATA OUT).
*2;INFLUENCED DATA IS DECIDED BY FIRST 2 BITS OF SWCI.

ERROR BYPASS ALGORITHM

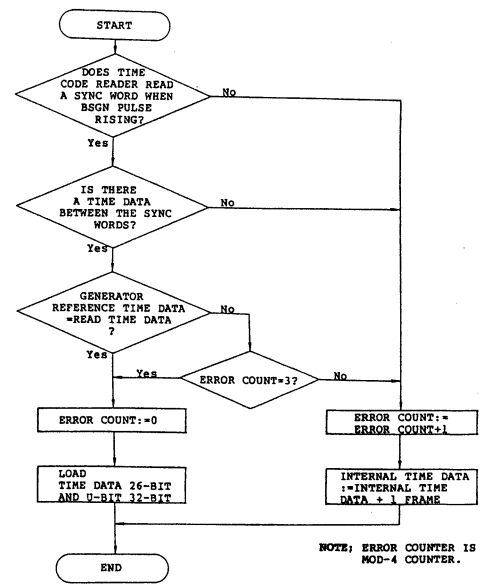

NOTE; ERROR COUNTER IS MOD-4 COUNTER.

TIMING CHART

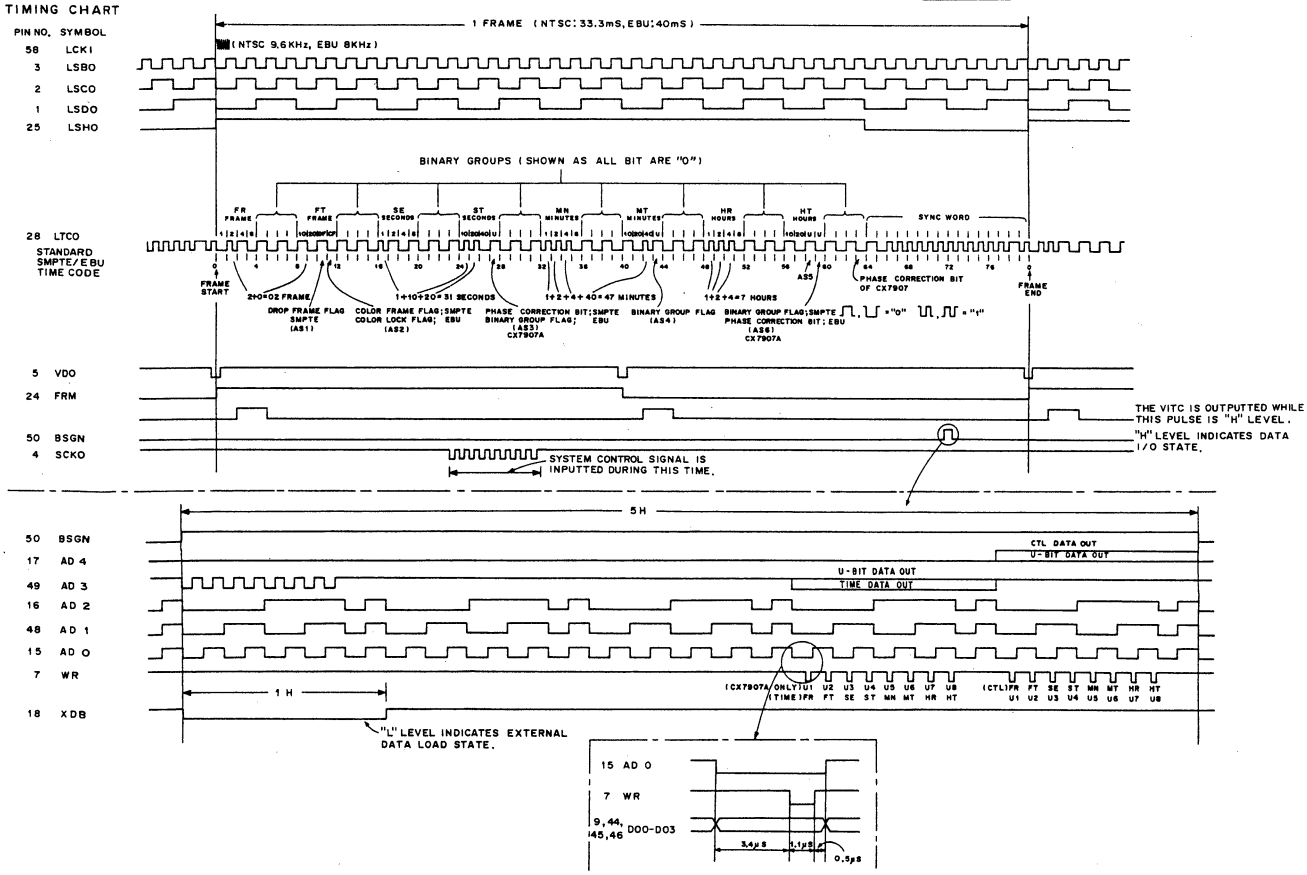

CX7912A (SONY)

C-MOS TIME CODE READER

– TOP VIEW –

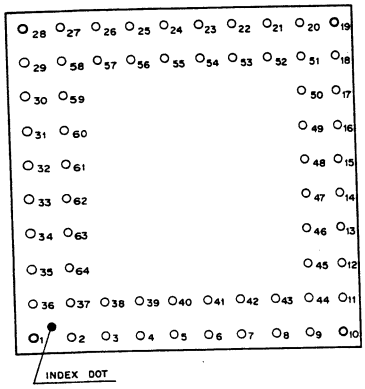

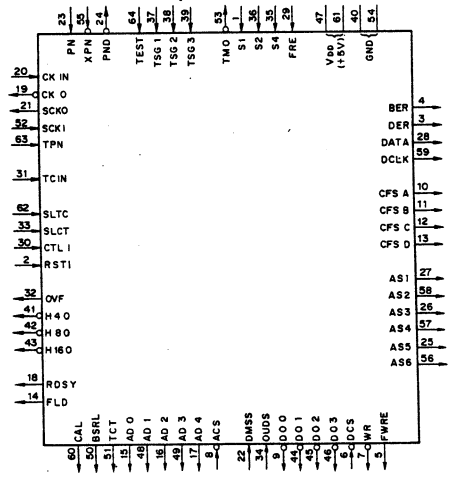

PIN ASSIGNMENT

PIN NO.	IN	OUT	SYMBOL	PIN NO.	IN	OUT	SYMBOL	PIN NO.	IN	OUT	SYMBOL	PIN NO.	IN	OUT	SYMBOL
1	O		S1	17		O	AD 4	33	O		SLCT	49		O	AD 3
2	O		RSTI	18		O	RDSY	34	O		OUDS	50		O	BSRL
3		O	DER	19		O	CK O	35	O		S4	51		O	TCT
4		O	BER	20	O		CK IN	36	O		S2	52	O		SCKI
5		O	FWRE	21		O	SCKO	37	O		TSG 1	53		O	TMO
6	O		DCS	22	O		DMSS	38	O		TSG 2	54		O	GND
7		O	WR	23	O		PN	39	O		TSG 3	55	O		XPN
8	O		ACS	24		O	PND	40		O	GND	56		O	AS6
9		O	DO 0	25		O	AS5	41		O	H40	57		O	AS4
10		O	CFS A	26		O	AS3	42		O	H80	58		O	AS2
11		O	CFS B	27		O	AS1	43		O	H160	59		O	DCLK
12		O	CFS C	28		O	DATA	44		O	DO1	60		O	CAL
13		O	CFS D	29	O		FRE	45		O	DO2	61	O		Vdd(+5V)
14		O	FLD	30	O		CTL I	46		O	DO3	62	O		SLTC
15		O	AD 0	31	O		TC IN	47	O		Vdd(+5V)	63	O		TPN
16		O	AD 2	32		O	OVF	48		O	AD 1	64	O		TEST

MODE SELECT

SLCT	SLTC	MODE
0	0	AUTO
0	1	TIME CODE
1	0	CTL
1	1	AUTO

CTL COUNT

FRE	RSTI	COUNT
0	X	DOWN COUNT
1	X	UP COUNT
X	⌐	RESET

SIGNAL FORMAT SELECT

S4	S2	S1	FORMAT	FRAME
0	0	0	FILM	24
0	0	1		
0	1	0		—
0	1	1		
1	0	0	PAL, SECAM	25
1	0	1	NOT ALLOWED	—
1	1	0	NTSC (NON DROP FRAME)	30
1	1	1	NTSC (DROP FRAME)	30

0 : LOW LEVEL
1 : HIGH LEVEL
X : DON'T CARE

BLOCK DIAGRAM

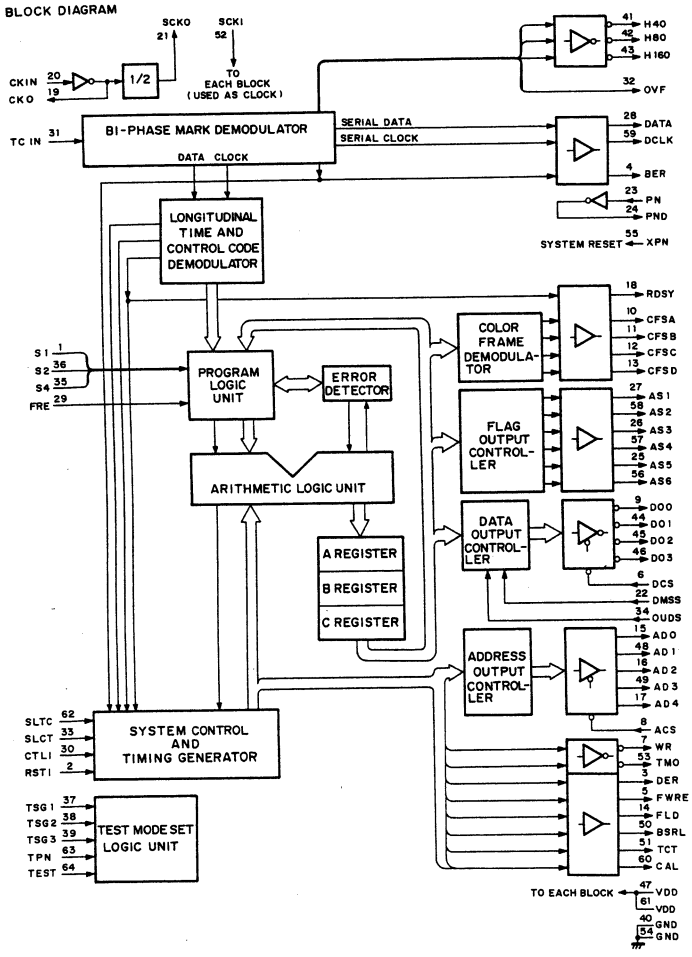

FUNCTIONAL PIN DEFINITION

Pin No.	SYMBOL	DESCRIPTION
8	ACS	ADDRESS LINE OUTPUT ENABLE (NEGATIVE-LOGIC)
15	AD0	ADDRESS DATA OUTPUT
48	AD1	
16	AD2	
49	AD3	
17	AD4	
27	AS1	PARALLEL DATA OUTPUT
58	AS2	
26	AS3	
57	AS4	
25	AS5	
56	AS6	
4	BER	BI-PHASE MARK ERROR (BIT ERROR) OUTPUT
50	BSRL	DATA OUT FLAG OUTPUT
60	CAL	CALCULATE OUT FLAG OUTPUT
10	CFSA	DEMODULATED COLOR FRAME OUTPUT
11	CFSB	
12	CFSC	
13	CFSD	
20	CKIN	CLOCK INPUT
19	CKO	CLOCK OUTPUT (NEGATIVE-LOGIC)
30	CTLI	CTL SIGNAL INPUT (⌐)
28	DATA	DEMODULATED SERIAL DATA OUTPUT
59	DCLK	DEMODULATED CLOCK OUTPUT
6	DCS	DATA LINE OUTPUT ENABLE (NEGATIVE-LOGIC)
3	DER	DEMODULATE DATA ERROR OUTPUT
22	DMSS	ASSIGNED DATA SELECT
9	DO0	DATA OUTPUT (NEGATIVE-LOGIC)
44	DO1	
45	DO2	
46	DO3	
14	FLD	FIELD DATA OUTPUT
29	FRE	CTL DIRECTION SIGNAL INPUT
5	FWRE	DEMODULATE DIRECTION SIGNAL OUTPUT
41	H40	SPEED RANGE FLAG 4 OUTPUT (NEGATIVE-LOGIC)
42	H80	SPEED RANGE FLAG 8 OUTPUT (NEGATIVE-LOGIC)
43	H160	SPEED RANGE FLAG 16 OUTPUT (NEGATIVE-LOGIC)
34	OUDS	ERROR BYPASS ON/OFF SELECT
32	OVF	OVERFLOW FLAG OUTPUT
23	PN	POWER ON SIGNAL INPUT
24	PND	POWER ON SIGNAL OUPUT (NEGATIVE-LOGIC)
18	RDSY	READ SYNC WORD DATA OUTPUT
2	RSTI	CTL TIMER RESET INPUT (⌐)
1	S1	SIGNAL FORMAT SELECT S1
36	S2	SIGNAL FORMAT SELECT S2
35	S4	SIGNAL FORMAT SELECT S4
52	SCKI	SYSTEM CLOCK INPUT
21	SCKO	SYSTEM CLOCK OUTPUT
33	SLCT	SELECT CTL INPUT
62	SLTC	SELECT LTC INPUT
55	XPN	SYSTEM RESET SIGNAL INPUT (NEGATIVE-LOGIC)
31	TCIN	LONGITUDINAL TIME AND CONTROL CODE INPUT
51	TCT	INPUT SELECT FLAG OUTPUT
53	TMO	TIME OVER SIGNAL OUTPUT (NEGATIVE-LOGIC)
7	WR	WRITE SIGNAL OUTPUT (NEGATIVE-LOGIC)
47	VDD	POWER LINE (+5V)
61	VDD	
40	GND	GND LINE
54	GND	
64	TEST	TEST MODE SET INPUT (TO BE CONNECTED WITH GND)
63	TPN	
37	TSG1	
38	TSG2	
39	TSG3	

TIMING CHART

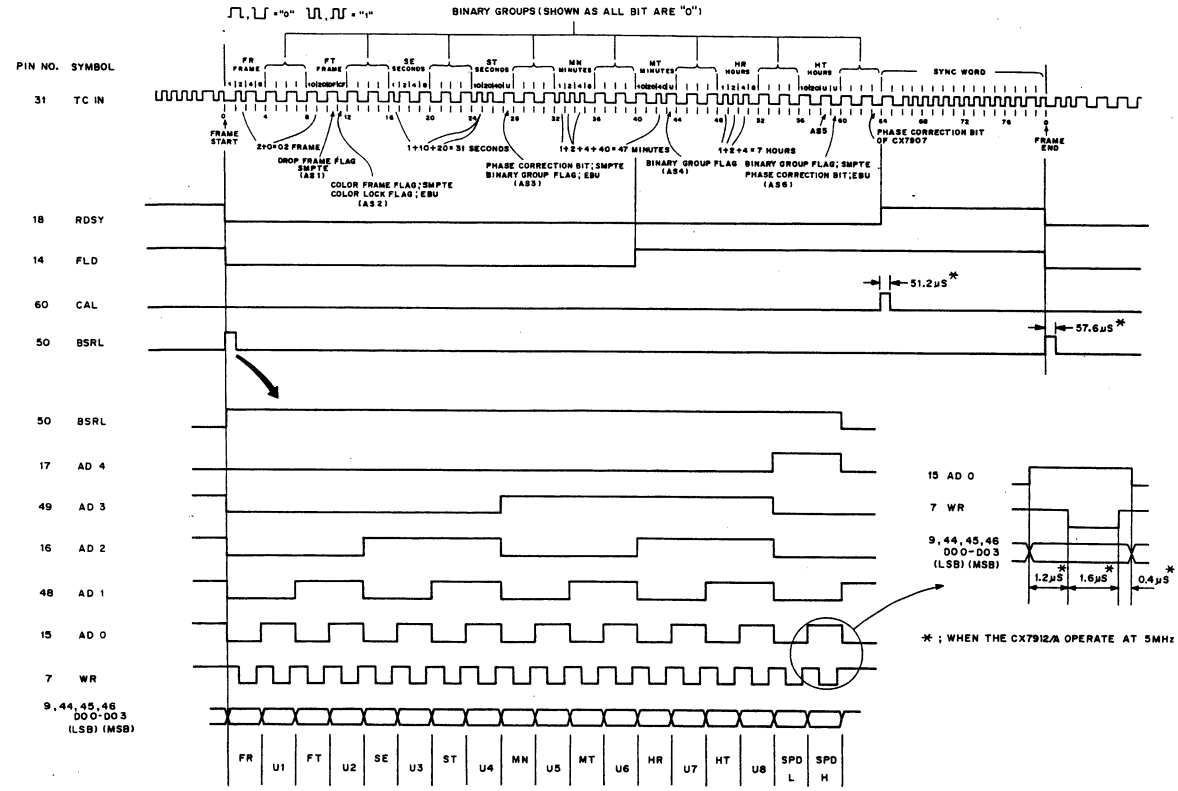

CX7913A (SONY)

C-MOS VITC (VERTICAL INTERVAL TIME CODE) READER

– TOP VIEW –

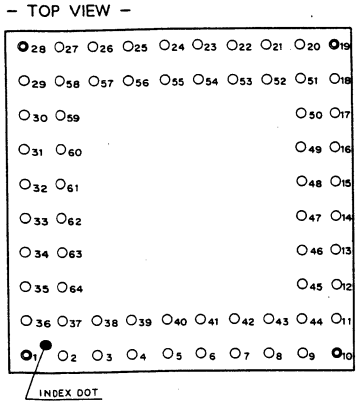

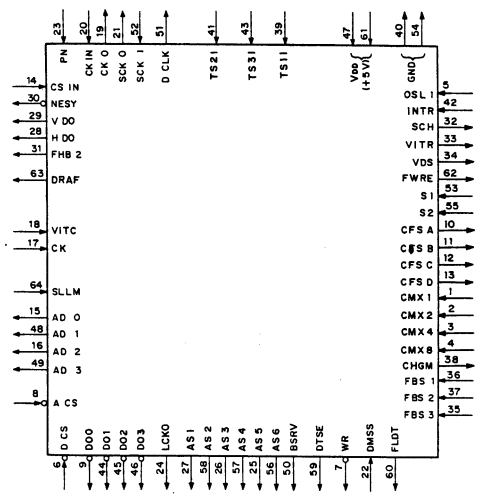

PIN NO.	IN	OUT	SYMBOL	PIN NO.	IN	OUT	SYMBOL	PIN NO.	IN	OUT	SYMBOL	PIN NO.	IN	OUT	SYMBOL
1	O		CMX 1	17	O		CK	33		O	VITR	49		O	AD3
2	O		CMX 2	18	O		VITC	34		O	VDS	50		O	BSRV
3	O		CMX 4	19		O	CK O	35	O		FBS 3	51		O	D CLK
4	O		CMX 8	20	O		CK IN	36	O		FBS 1	52	O		SCK I
5	O		OSL 1	21		O	SCK O	37	O		FBS 2	53	O		S1
6	O		D CS	22	O		DMSS	38		O	CHGM	54		O	GND
7		O	WR	23	O		PN	39	O		TS11	55	O		S2
8	O		A CS	24		O	LCKO	40		O	GND	56		O	AS6
9		O	DO0	25		O	AS5	41	O		TS21	57		O	AS4
10		O	CFS A	26		O	AS3	42	O		INTR	58		O	AS2
11		O	CFS B	27		O	AS1	43	O		TS31	59		O	DTSE
12		O	CFS C	28		O	HDO	44		O	DO1	60		O	FLDT
13		O	CFS D	29		O	VDO	45		O	DO2	61	O		VDD(+5V)
14	O		CS IN	30		O	NESY	46		O	DO3	62		O	FWRE
15		O	AD 0	31		O	FHB 2	47	O		VDD(+5V)	63		O	DRAF
16		O	AD 2	32		O	SCH	48		O	AD1	64	O		SLLM

BLOCK DIAGRAM

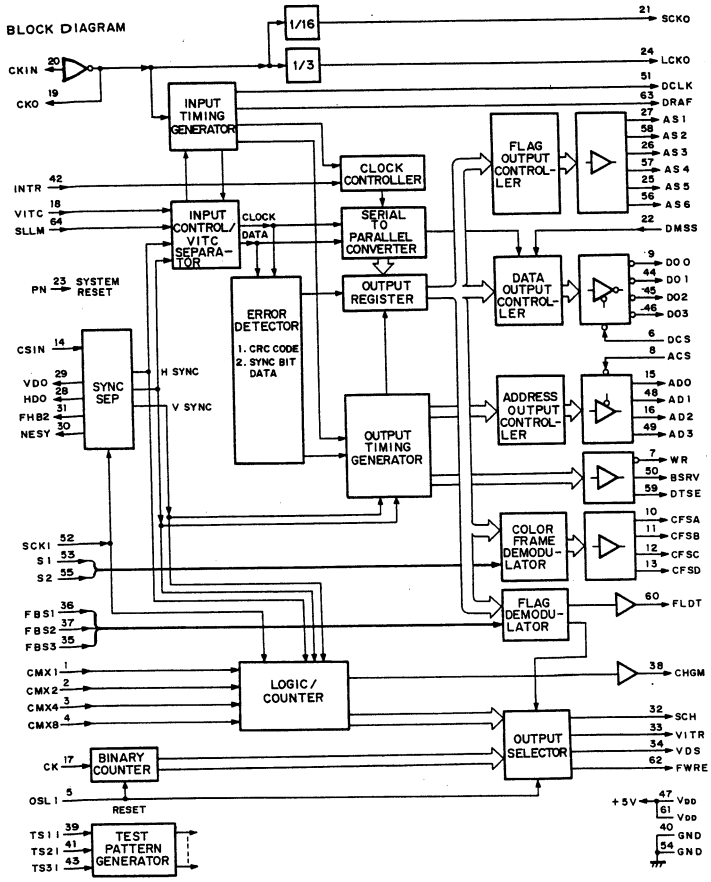

FUNCTIONAL PIN DEFINITION

Pin No.	SYMBOL	DESCRIPTION
8	ACS	ADDRESS LINE ENABLE INPUT
15	AD0	ADDRESS DATA OUTPUT
48	AD1	
16	AD2	
49	AD3	
27	AS1	PARALLEL DATA OUTPUT
58	AS2	
26	AS3	
57	AS4	
25	AS5	
56	AS6	
50	BSRV	DATA OUT FLAG OUTPUT
10	CFSA	DEMODULATED COLOR FRAME OUTPUT
11	CFSB	
12	CFSC	
13	CFSD	
38	CHGM	CHARACTER V POSITION GATE SIGNAL OUTPUT
17	CK	INTERNAL COUNTER CLOCK INPUT
20	CKIN	CLOCK INPUT
19	CKO	CLOCK OUTPUT (NEGATIVE-LOGIC)
1	CMX1	CHARACTER V POSITION SELECT INPUT
2	CMX2	
3	CMX4	
4	CMX8	
14	CSIN	COMPOSITE SYNC INPUT
51	DCLK	VITC READ CLOCK OUTPUT
6	DCS	DATA LINE ENABLE INPUT
22	DMSS	ASSIGNED BIT DATA SELECT INPUT
9	DO0	DATA OUT (NEGATIVE-LOGIC)
44	DO1	
45	DO2	
46	DO3	
63	DRAF	VITC SYNCHRONIZE SIGNAL D OUTPUT
59	DTSE	VITC DATA SEARCH FLAG OUTPUT
36	FBS1	FIELD MARK POSITION SELECT 1 INPUT
37	FBS2	FIELD MARK POSITION SELECT 2 INPUT
35	FBS3	FIELD MARK POSITION SELECT 3 INPUT
31	FHB2	FH/2 SIGNAL OUTPUT
60	FLDT	FIELD DATA OUTPUT
62	FWRE	TAPE DIRECTION SIGNAL OUTPUT
28	HDO	HORIZONTAL SYNC DRIVE OUTPUT
42	INTR	INTERRUPT REQUEST INPUT
24	LCKO	LTC CLOCK OUTPUT
30	NESY	LOST-SYNC FLAG OUTPUT
5	OSL1	OUTPUT SIGNAL SELECT 1 INPUT
23	PN	POWER ON RESET INPUT
53	S1	SIGNAL FORMAT SELECT S1 INPUT
55	S2	SIGNAL FORMAT SELECT S2 INPUT
32	SCH	OUTPUT SIGNAL SCH
52	SCKI	SYSTEM CLOCK INPUT
21	SCKO	SYSTEM CLOCK OUTPUT
64	SLLM	READ SIZE SELECT INPUT
29	VDO	VERTICAL SYNC DRIVE OUTPUT
34	VDS	OUTPUT SIGNAL VDS
18	VITC	VITC SIGNAL INPUT
33	VITR	OUTPUT SIGNAL VITR
7	WR	WRITE SIGNAL OUTPUT (NEGATIVE-LOGIC)
47	VDD	POWER LINE (+5V)
61	VDD	
40	GND	GND LINE
54	GND	
39	TS1I	
41	TS2I	TEST INPUT
43	TS3I	

#1,2,3,4 CMX1 TO 8;CHARACTER V POSITION SELECT

CMX8	CMX4	CMX2	CMX1	INSERTION LINE (#38 CHGM IS H LEVEL) NTSC	PAL,SECAM
0	0	0	0	---	---
0	0	0	1	---	284-303 596-615
0	0	1	0	---	264-283 576-595
0	0	1	1	---	244-263 556-575
0	1	0	0	227-246	224-243 536-555
0	1	0	1	207-226	204-223 516-535
0	1	1	0	187-206	184-203 496-515
0	1	1	1	167-186	164-183 476-495
1	0	0	0	147-166	144-163 456-475
1	0	0	1	127-146	124-143 436-455
1	0	1	0	107-126	104-123 416-435
1	0	1	1	87-106	84-103 396-415
1	1	0	0	67- 86	64- 83 376-395
1	1	0	1	47- 66	44- 63 356-375
1	1	1	0	27- 46	24- 43 336-355
1	1	1	1	---	---

#36,37,35 FBS1 TO FBS3;FIELD DATA SELECT

FBS3	FBS2	FBS1	#60 FLDT OUTPUT
0	0	0	AS1 (VITC BIT No.14)
0	0	1	AS2 (VITC BIT No.15)
0	1	0	AS3 (VITC BIT No.35)
0	1	1	AS4 (VITC BIT No.55)
1	0	0	AS5 (VITC BIT No.74)
1	0	1	AS6 (VITC BIT No.75)
1	1	0	-------
1	1	1	-------

#53,55 S1,S2;SIGNAL FORMAT SELECT

S2	S1	#13 CFSD FORMAT
0	0	UNSPECIFIED
0	1	
1	0	NTSC NON DROP FRAME
1	1	NTSC DROP FRAME

0;LOW LEVEL
1;HIGH LEVEL

TIMING CHART

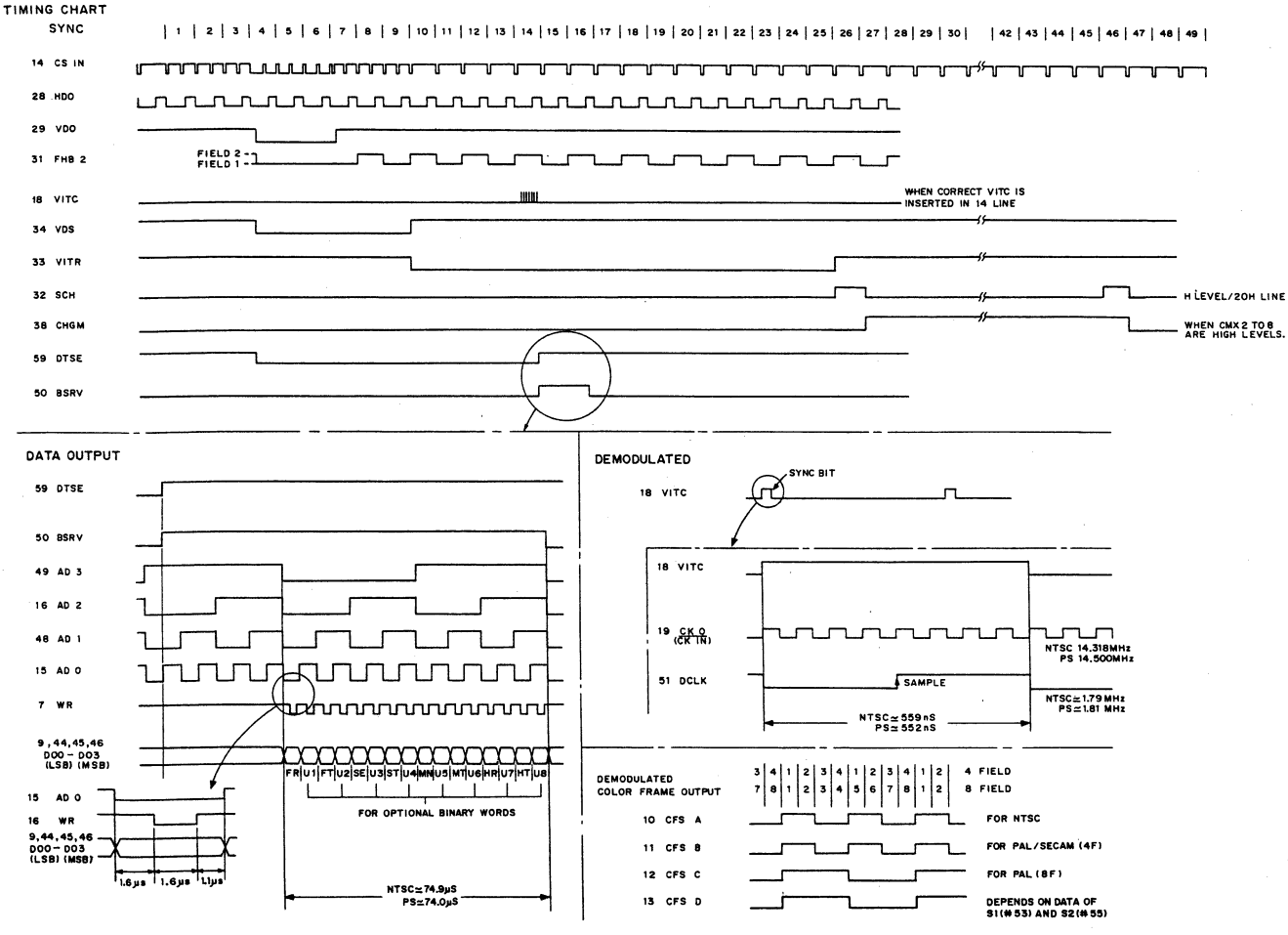

CX7930A (SONY) (V_{DD} = +5V) FLAT PACKAGE

C-MOS SYNC GENERATOR (NTSC, PAL-M, PAL, SECAM)

– TOP VIEW –

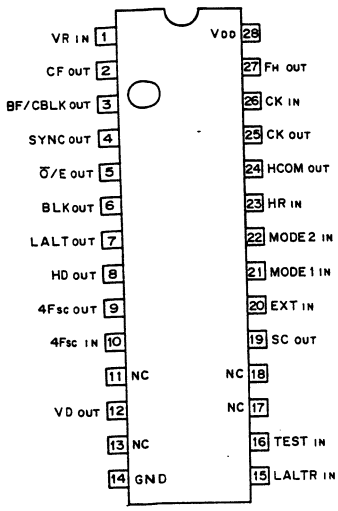

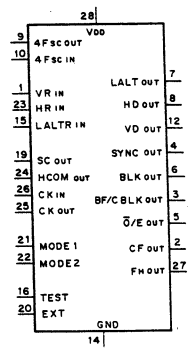

Ō/E : ŌDD/EVEN FIELD
CF : COLOR FRAME PULSE
HCOM : H COMPARATOR

SYSTEM	4Fsc	CLOCK
NTSC	910 FH	910FH
PAL	1135FH+2Fv	908FH
PALM	909FH	910FH
SECAM	——	908FH

INPUTS MODE 1	INPUTS MODE 2	SYSTEM
0	0	NTSC
0	1	SECAM
1	0	PALM
1	1	PAL

INPUTS EXT	INPUTS TEST	FUNCTION
0	0	INTERNAL
0	1	INVALID
1	0	EXT
1	1	TEST

0 ; LOW LEVEL (GND)
1 ; HIGH LEVEL (V_{DD})

TEST "0": OPEN (INTERNALLY PULLED DOWN)

NTSC, PAL-M (FIELD 1,3)

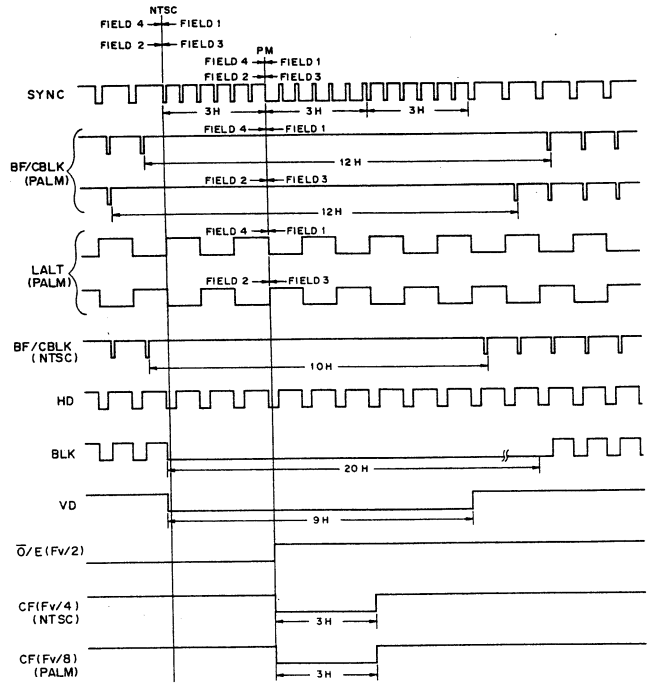

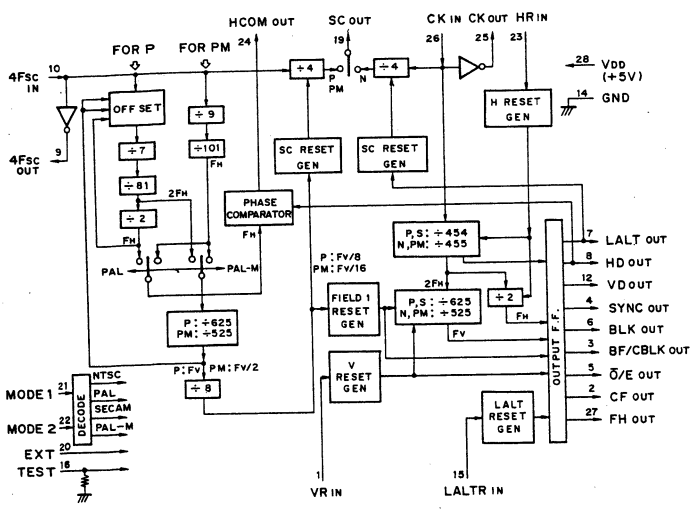

NTSC, PAL-M (FIELD 2,4)

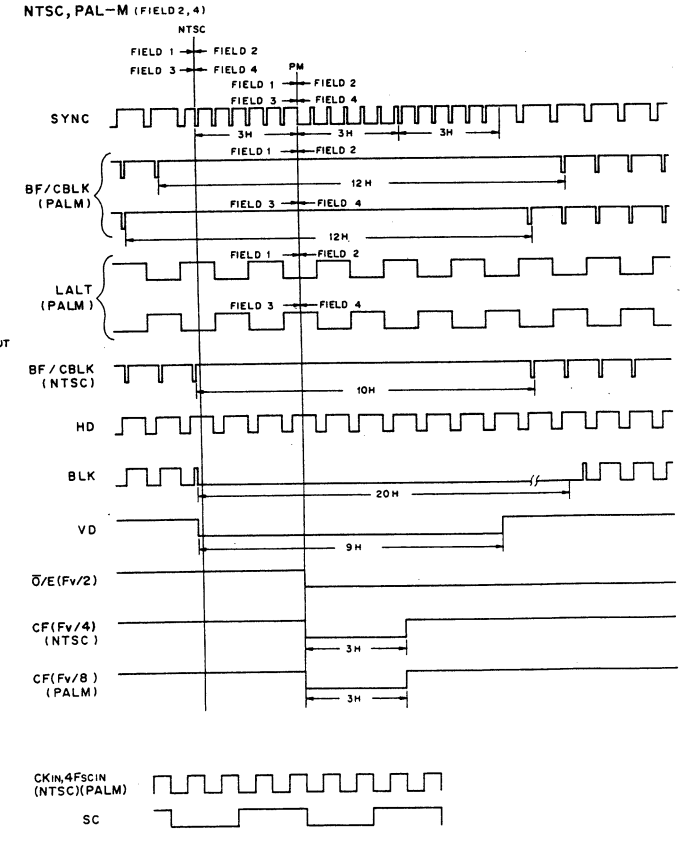

PAL, SECAM (FIELD 4,2)

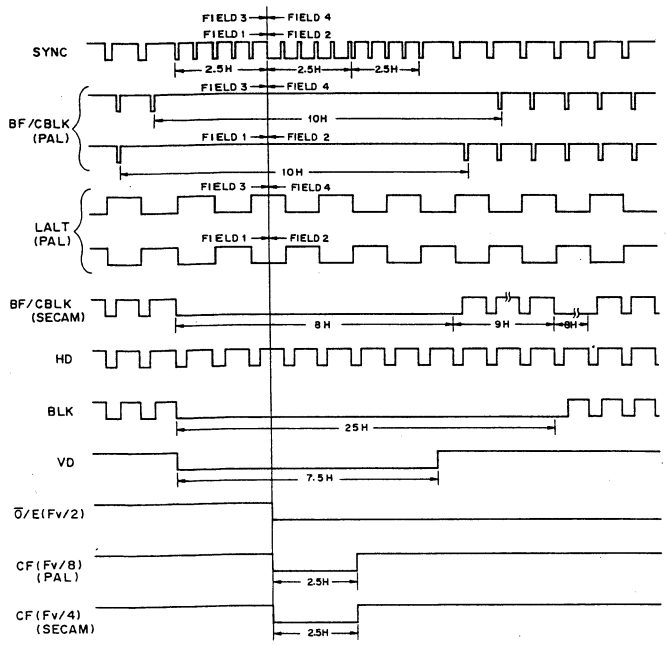

P: PAL, SECAM
N: NTSC, PALM

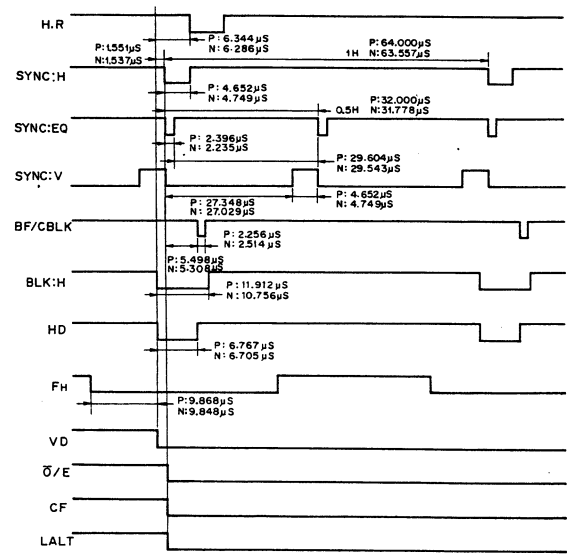

PAL, SECAM (FIELD 1,3)

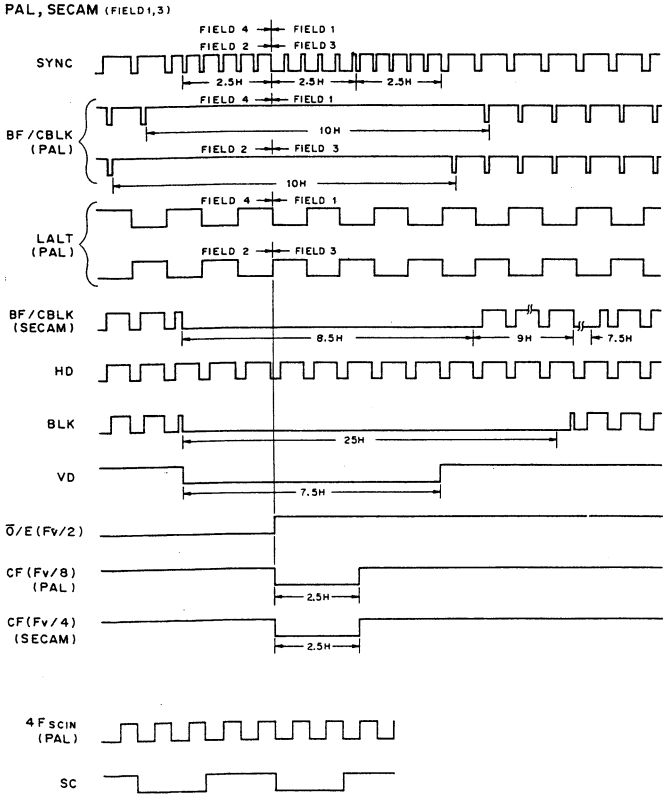

CX7993A (SONY) FLAT PACKAGE

C-MOS TIMING GENERATOR

– TOP VIEW –

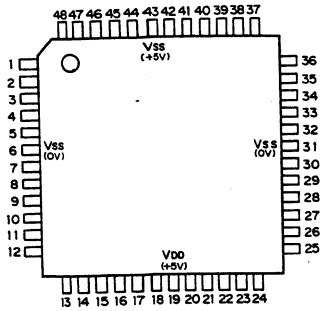

PIN ASSIGNMENT

PIN NO	IN	OUT	SYMBOL	PIN NO	IN	OUT	SYMBOL	PIN NO	IN	OUT	SYMBOL	PIN NO	IN	OUT	SYMBOL
1		○	$\overline{GH}$	13		○	CR	25	○		C11	37		○	$\overline{IS}$
2		○	$\overline{GS}$	14		○	C2B4-2	26		○	C10	38		○	$\overline{VD}$
3		○	$\overline{GIH}$	15		○	SG	27	○		SYS 1	39		○	VBLK
4		○	$\overline{GIS}$	16		○	FDET	28	○		SYS2	40		○	CBLK
5	○		CID −	17	○		EXTH 1	29			T1	41		○	$\overline{HD}$
6			Vss	18	○		EXTH2	30			T2	42		○	SPA
7	○		CID +	19			VDD	31			Vss	43			VDD
8	○		C2I	20	○		$\overline{RST}$	32			T3	44		○	SID
9		○	C20	21	○		DOI	33			T4	45		○	LALT
10		○	C2B4-1	22	○		NOR	34		○	FID1	46		○	BF
11		○	$\overline{CD}$	23	○		SW A/B	35		○	FID2	47		○	H BLK
12	○		CS	24	○		$\overline{YS}$	36		○	VO	48		○	CCL

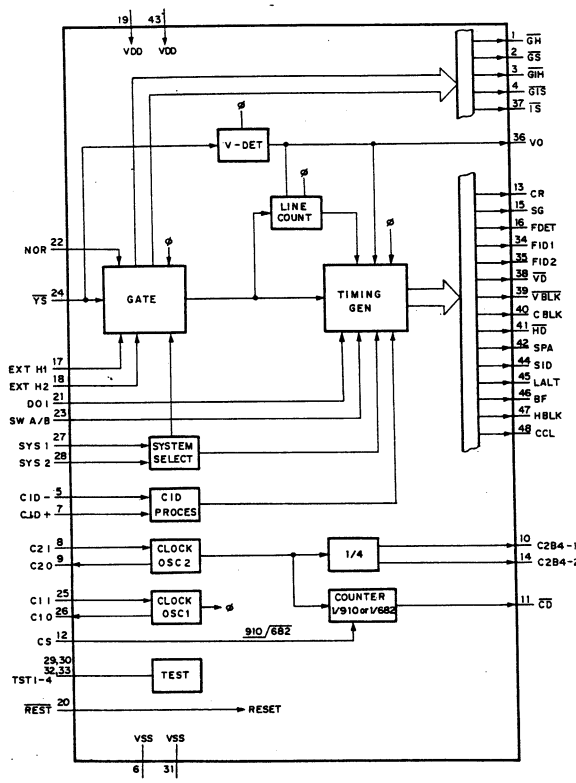

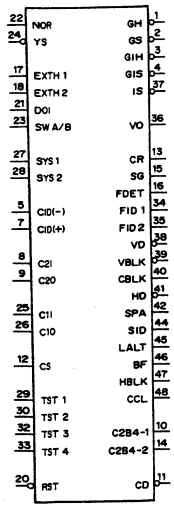

BF	;	BURST FLAG OUT
C11	;	CLOCK 1 IN
C10	;	CLOCK 1 OUT
C2B4-1	;	CLOCK 2/4-1
C2B4-2	;	CLOCK 2/4-2
C2I	;	CLOCK 2 IN
C20	;	CLOCK 2 OUT
CBLK	;	CHROMA BLANKING PULSE OUT
CCL	;	CHROMA CLAMP
CD	;	COUNT DOWN SIGNAL
CID+,CID−	;	CHROMA ID +,− IN
CR	;	CORRECT SYNC OUT
CS	;	COUNTER SELECT IN
EXTH 1	;	EXTERNAL H-1
EXTH 2	;	EXTERNAL H-2
FDET	;	FRAME DET OUT
FID1 FID2	;	FRAME ID 1,2 OUT
GH	;	GATED H OUT
GIH	;	GATE/INTERPORATED H OUT
GIS	;	GATE/INTERPORATED SYNC OUT
GS	;	GATED SYNC OUT
HBLK	;	H-BLANKING PULSE OUT
HD	;	HD OUT
IS	;	INTERPORATED SYNC OUT
LALT	;	LINE ALTERNATE OUT
NOR	;	MODE SELECT(NORMAL/SERCH) IN
RST	;	RESET IN
SG	;	SYNC GATE OUT
SID	;	SECAM ID OUT
SPA	;	SECAM PHASE ALTERNATE OUT
SW A/B	;	Y SWITCHING PULSE A/B IN
SYS1,SYS2	;	SYSTEM SELECT 1,2 IN
TST1,TST2	;	TEST1,TEST2
VBLK	;	V-BLANKING PULSE OUT
VD	;	VD OUT
VO	;	V OUT
YS	;	Y SYNC OUT

CX7998 (SONY) FLAT PACKAGE

C-MOS GENLOCK DRIVER

– TOP VIEW –

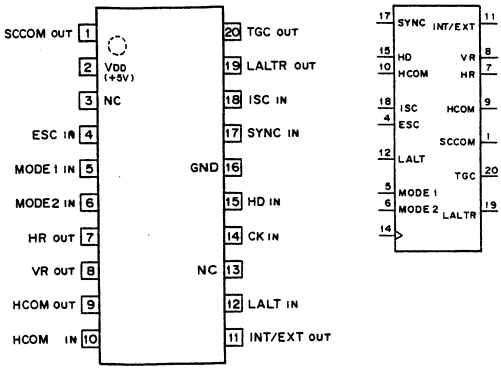

INPUT		MODE	SYSTEM
MODE1	MODE2		
0	0	M1	PAL-VBS
1	0	M2	PALM-VBS
0	1	M3	PAL,SECAM-VS/SC/LALT
1	1	M4	NTSC-VBS,NTSC-VS/SC PALM-VS/SC/LALT

0 ; LOW LEVEL
1 ; HIGH LEVEL

CX877 (SONY)

MOTOR DRIVER

– TOP VIEW –

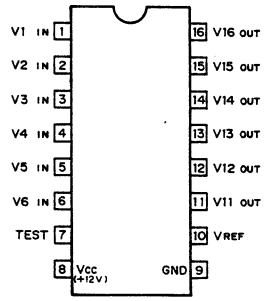

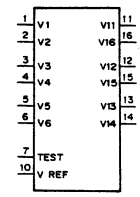

V1, V2, V11, V16 ; U PHASE

V3, V4, V12, V15 ; V PHASE

V5, V6, V13, V14 ; W PHASE

TIMING CHART

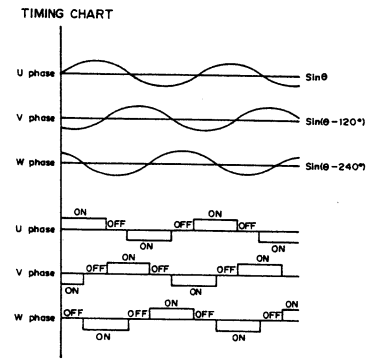

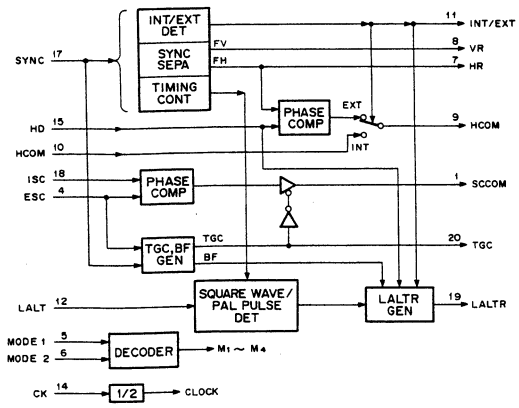

INPUT

CK	; 4fsc CLOCK INPUT
ESC	; SC/COLOR BURST
HCOM	; PHASE COMPARATE FROM CXD1217
HD	; H DRIVE FROM CXD1217
ISC	; SUBCARRIER FROM CXD1217
LALT	; LALT FROM REFERENCE SIGNAL GENERATOR
MODE1,2	; SYSTEM SELECT
SYNC	; SYNC FROM REFERENCE SIGNAL GENERATOR

OUTPUT

HCOM	; PHASE COMPARATOR HR WITH HD
HR	; fH OF SYNC SEPARATE
INT/EXT	; INTERNAL/EXTERNAL SPECIFIED
LALTR	; LINE CHANGE RESET
SCCOM	; PHASE COMPARATOR ESC WITH ISC
TGC	; TRISTATE CONTROL
VR	; fV OF SYNC SEPARATE

CXA1020P (SONY)

CHROMA CROSS-COLOR NOISE REDUCER/EDGE COMPENSATOR

– TOP VIEW –

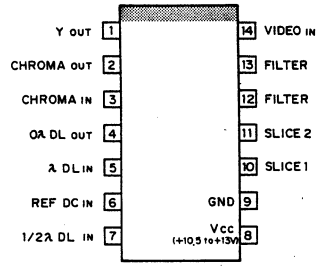

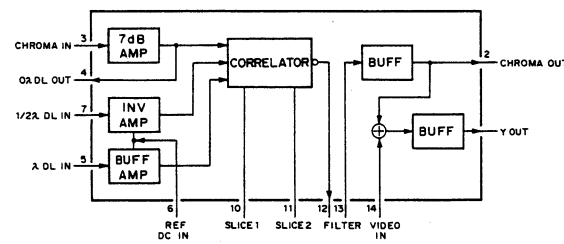

CXA1039M (SONY) FLAT PACKAGE

DETAIL ENHANCER LIMITER

– TOP VIEW –

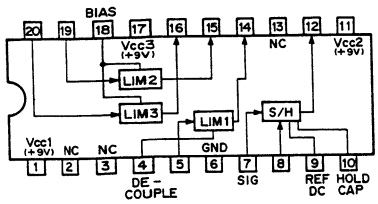

CXA1040M (SONY) MINI FLAT PACKAGE

VIDEO SIGNAL PROCESSOR

– TOP VIEW –

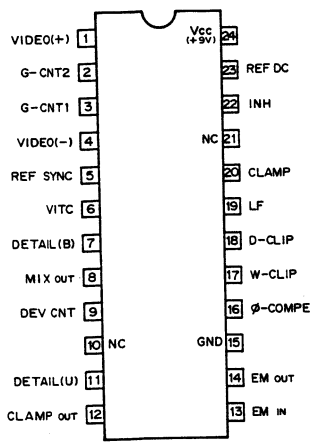

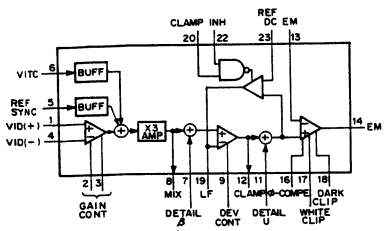

CXA1041M (SONY) MINI FLAT PACKAGE

FM MODULATOR

– TOP VIEW –

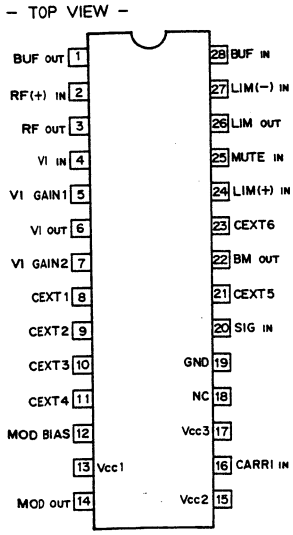

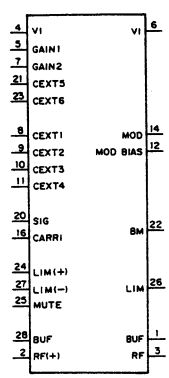

BM OUT ; BALANCED MODULATOR OUTPUT
BUF IN/OUT ; BUFFER INPUT/OUTPUT
CEXT 1 – 6 ; CURRENT MILLER EXIT 1 – 6
LIM IN/OUT ; LIMITER INPUT/OUTPUT
MOD BIAS ; MODULATOR BIAS
MUTE IN ; MUTE INPUT
RF IN/OUT ; RF INPUT/OUTPUT
SIG IN ; BALANCED MODULATOR SIGNAL INPUT

CXA1077M (SONY)

DUAL DIFFERENTIAL PRE-AMPLIFIER

– TOP VIEW –

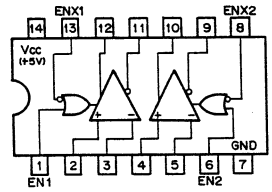

EN	ENX	OUTPUT
0	0	OUT
0	1	HI-Z
1	0	OUT
1	1	OUT

0 ; LOW LEVEL
1 ; HIGH LEVEL
HI-Z; HIGH IMPEDANCE

CXA1096M (SONY) FLAT PACKAGE

8-BIT 20MSPS FLASH A/D CONVERTER (TTL INPUT/OUTPUT)

– TOP VIEW –

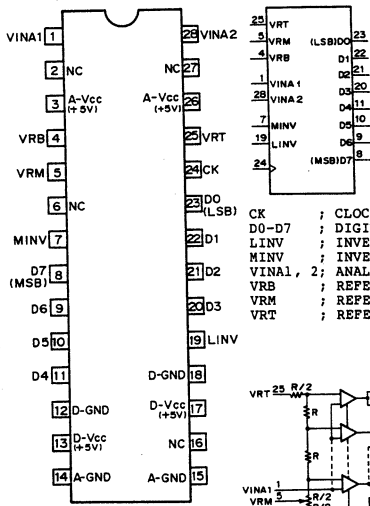

CK ; CLOCK INPUT
D0-D7 ; DIGITAL DATA OUTPUTS
LINV ; INVERT SIGNAL of D0-D6
MINV ; INVERT SIGNAL of D7
VINA1, 2; ANALOG VIDEO SIGNAL 1, 2
VRB ; REFERENCE VOLTAGE (BOTTOM)
VRM ; REFERENCE VOLTAGE (MIDDLE)
VRT ; REFERENCE VOLTAGE (TOP)

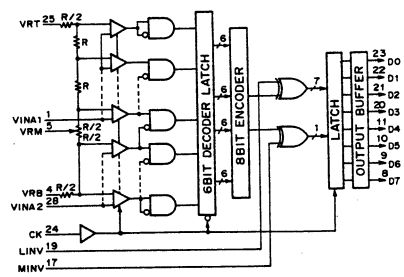

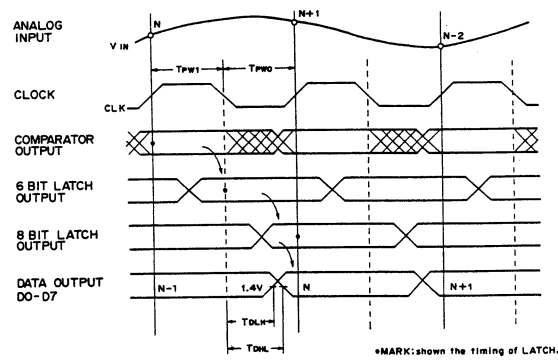

*MARK: shown the timing of LATCH.

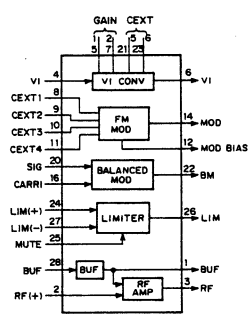

CXD1023AQ (SONY) FLAT PACKAGE

C-MOS TBC

- TOP VIEW -

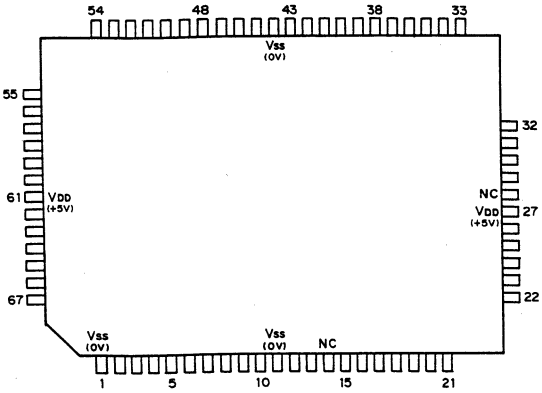

PIN NO	IN	OUT	SYMBOL	PIN NO	IN	OUT	SYMBOL	PIN NO	IN	OUT	SYMBOL	PIN NO	IN	OUT	SYMBOL
1			Vss	21		○	XFFD	41	○	○	XDOW	61			VDD
2	○		XSYN	22	○		MOD1	42		○	SPD6	62		○	SPD2
3	○		CTL1	23	○		MOD2	43	○	○	XDOP	63	○		HCK
4		○	XCDO	24	○		MOD3	44			Vss	64		○	SPD1
5		○	XYDO	25	○		WND1	45		○	SPD5	65		○	SPDO
6	○	○	XMCDO	26	○		WND2	46	○		TDA	66	○		XRVD
7		○	XRDO	27			VDD	47	○		XTS1	67	○		XRFH
8		○	XPBV	28	—	—	—	48	○		XTS2				
9	○		XCLR	29	○		WCK	49	○		XLD				
10		○	XCMT	30	—	—	—	50	○		XTRU				
11			Vss	31		○	HNDT	51		○	THD				
12	○		XTS3	32	○		XWZ	52	○	○	XVABS				
13	○		RCK	33		○	HPLY	53	○	○	XGB				
14	○		CTL2	34	○		XDO1	54	○	○	XBID				
15	○		XCDN	35	○		XDO2	55	○	○	XFBD				
16	○		XWE	36	○		HEE	56	○	○	XFRB				
17	○		XRMA	37	○		XDT	57		○	XDGB				
18	○		XVUP	38	○		XNOR	58	○	○	XGH				
19	○		XBTM	39	○		XDOA	59		○	SPD4				
20	○		XDOB	40		○	SPD7	60		○	SPD3				

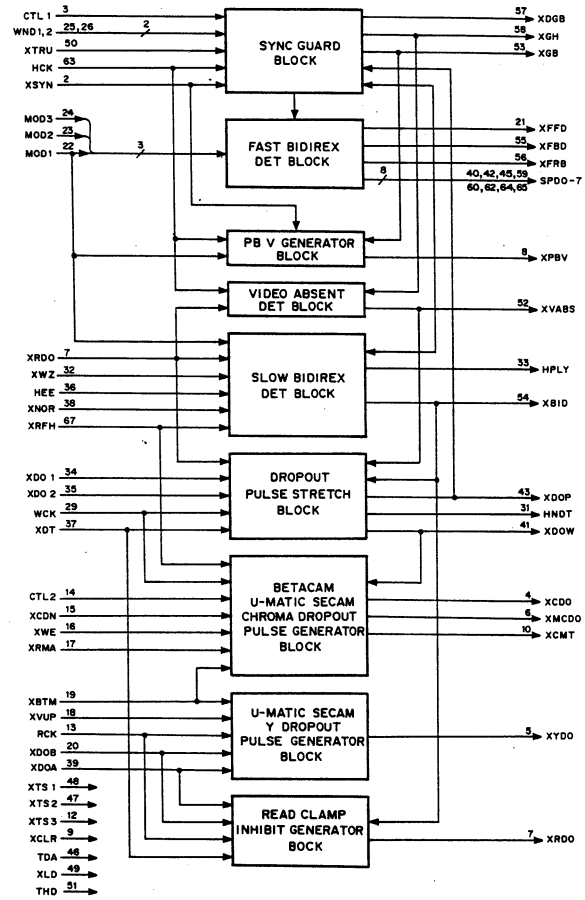

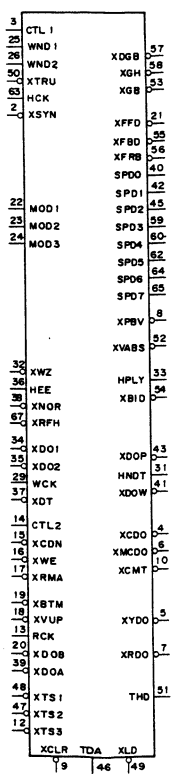

CTL1,2; CTL1,2 IN
HCK; 910 CLOCK IN
HEE; EE IN
HNDT; NORMAL PLAY/DT PLAY OUT
HPLY; PLAY OUT
MOD1; MODE 1 IN (525/625)
MOD2; MODE 2 IN (U-MATIC/BETACAM)
MOD3; MODE 3 IN (/U-MATIC +BETACAM)
RCK; READ CLOCK IN
SPD0; PLAYBACK SPEED 20 OUT

SPD7; PLAYBACK SPEED 27 OUT
TDA; TEST DATA IN
THD; TEST HD OUT
WCK; WRITE CLOCK IN
WND1,2; SYNC GUARD WINDOW 1,2 IN
XBID; BIDIREX IN/OUT
XBTH; BOTTOM LINE SIGNAL IN (SECAM)
XCDN; DROPOUT CHROMA 1H SHIFT DOWN IN (SECAM)
XCDO; DROPOUT CHROMA PULSE OUT (SECAM)
XCLR; CLEAR IN
XCMT; CHROMA MUTE OUT (BETACAM ENCODER)
XDGB; DROPOUT PULSE OUT (BETACAM CHROMA)
XDO1,2; DROPOUT PULSE 1,2 IN
XDOA,B; READ SIDE DROPOUT PULSE A,B IN
XDOP; DROPOUT PULSE STRETCH IN/OUT
XDOW; DROPOUT PULSE STRETCH IN/OUT (NOR/DT PLAYBACK ONLY)
XDT; DT IN
XFBD; FAST BIDIREX IN/OUT
XFFD; F-FORWARD OUT
XFRB; FAST REVERSE BIDIREX IN/OUT
XGB; GUARD BAND IN/OUT
XGH; GUARD H IN/OUT
XLD; TEST DATA LOAD IN
XMCDO; DROPOUT CHROMA MEMORY DATA IN/OUT (SECAM)
XNOR; NORMAL FWD IN
XPBV; PB VIDEO OUT
XRDO; READ CLAMP INHIBIT SIGNAL OUT
XRFH; REF FH IN
XRMA; DROPOUT CHROMA OF MEMORY SIGNAL IN (SECAM)
XRVD; REF VD IN
XSYN; PB SYNC IN
XTRU; SYNC GUARD THROUGH MODE IN
XTS1-3; TEST 1-3 IN
XVABS; VIDEO ABSENT IN/OUT
XVUP; V LOCK UP
XWE; WRITE IN
XWZ; WRITE ZERO IN
XYDO; DROPOUT Y PULSE OUT (SECAM)

CXD1024Q (SONY)

C-MOS TIMING PULSE GENERATOR FOR TBC

– TOP VIEW –

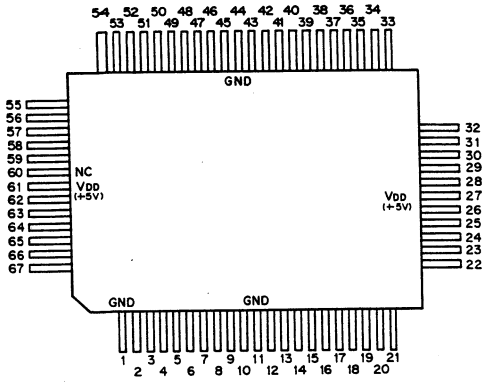

PIN NO.	IN/OUT	SYMBOL	PIN NO.	IN/OUT	SYMBOL	PIN NO.	IN/OUT	SYMBOL	PIN NO.	IN/OUT	SYMBOL
1	–	GND	18	O	ZEROK	35	O	WVCRZ	52	O	SYNOT
2	I	EOHI	19	O	RZERO	36	O	ADVVS	53	O	BFOUT
3	O	EOHO	20	I	ZEROG	37	I	ADVVD	54	O	ESPLD
4	I	BURST	21	O	E14CK	38	I	ADVFL	55	O	HCKOT
5	O	E45FE	22	I	MODE1	39	O	HBLK	56	I	HCKIN
6	O	APCBF	23	I	MODE2	40	I	FH	57	I	NOCON
7	I	APCEN	24	I	UB	41	I	VD	58	O	LALST
8	I	E4FSI	25	I	CNR	42	I	HD	59	O	V SET
9	O	E12SC	26	I	E816	43	I	ALT	60		
10	O	SC	27	–	VDD	44	–	VSS	61	–	VDD
11	–	GND	28	I	TEST	45	I	BLKI	62	I	EXT
12	O	PSC	29	I	EE8DL	46	I	FLDOE	63	I	VR
13	O	REFNI	30	I	EEPB	47	I	SYNCI	64	I	HR
14	O	REFOE	31	I	SV2	48	I	BFIN	65	I	LALTR
15	I	FRB	32	I	SV1	49	I	DOP	66	I	TGC
16	O	ROK	33	I	REC	50	I	RCLP	67	O	EOHD
17	O	HRCR	34	I	AB	51	I	BLKOT			

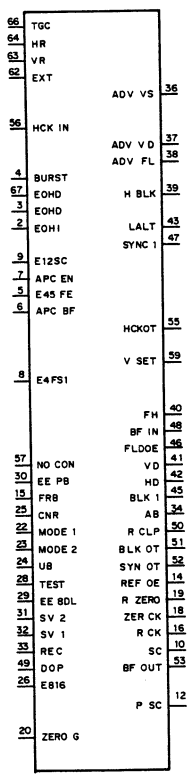


```
AB      ; ADVANCE SYNC V PHASE CONTROL
ADVFL   ; ADVANCE SYNC FIELD O/E OUT
ADVVD   ; ADVANCE SYNC VD OUT
ADVVS   ; ADVANCE SYNC V SET PULSE OUT
APCBF   ; APC BURST FLAG
APCEN   ; APC ENABLE
BF IN   ; BF IN
BF OUT  ; BF OUT
BLKI    ; BLANKING IN
BLKOT   ; BLANKING OUT
BURST   ; BURST
DOP     ; CLAMP PULSE INHIBIT
E 12SC  ; 1/2 SC OUT
E 14SC  ; 1/4 SC OUT
E4FSI   ; 4 FSC IN
E45FE   ; 4/5 FSC OUT
E 8/6   ; 16/32
EE8DL   ; 8H DELAY
EEPB    ; ADVANCE OFF
EOHD    ;   HD
EOHI    ;   H IN
EOHO    ;   H OUT
ESPLD   ; LINE DO
EXT     ; EXT
FH      ; FH
FLDOE   ; FIELD O/E
FRB     ; FIRST REVERSE BIDIREX
HBLK    ; H BLANKING PULSE
HCK IN  ; HCK IN
HCK OT  ; HCK OUT
HD      ; HD
HR      ; HR
HRCK    ; 1/2 READ CK
LALST   ; LINE ALTERNATE SET
LALT    ; LINE ALTERNATE
LALTR   ; LINE ALTERNATE RESET
MODE 1  ; MODE 1
MODE 2  ; MODE 2
NOCON   ; CONF1
PSC     ; PROCESS SC OUT
RCLP    ; READ CLAMP PULSE
REC     ; REC
REFNI   ; REF N/I
REFOE   ; REF O/E
RCK     ; READ CK
RZERO   ; READ ZERO
SC      ; SC OUT
SV 1    ; SV 1
SV 2    ; SV 2
SYNCI   ; SYNC IN
SYNOT   ; SYNC OUT
TEST    ; TEST
TGC     ; TGC
UB      ; Umatic/Betacam
VD      ; VD
VR      ; V RESET
V SET   ; V SET
WVCRZ   ; CHROMA READ ZERO
SEROK   ; ZERO CK
ZEROG   ; ZERO GATE
```

CXD1045AQ (SONY)

C-MOS PLL COUNTER FOR TBC (WRITE CLOCK)

– TOP VIEW –

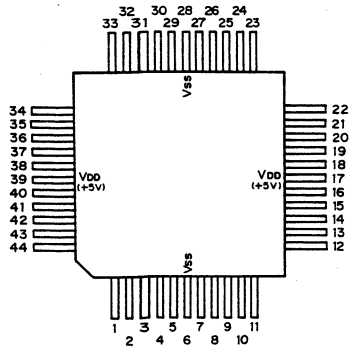

PIN NO	IN/OUT	SYMBOL	PIN NO	IN/OUT	SYMBOL	PIN NO	IN/OUT	SYMBOL	PIN NO	IN/OUT	SYMBOL
1	I	Vss2	12	I	EXRP	23	I	TSDA	34	I	PBIN
2	I	SDO	13	I	WCZ1	24	I	TSOUT	35	I	WSCI
3	I	GB	14	I	WCZ2	25	I	TSCH	36	O	WSCO
4	I	VABS	15	I	WCZ3	26	I	TSZE	37	I	WCK
5	I	FBID	16	I	WCZ4	27	O	RPOUT	38	I	PLYST
6	I	Vss	17	–	VDD	28	–	Vss	39	–	VDD
7	I	FRB	18	O	WZERO	29	I	WLOE	40	I	SH1
8	I	TMD 1	19	O	COUNT H	30	I	WLNI	41	O	DSHO
9	I	TMD 2	20	I	WVST	31	O	V CONT	42	I	DSHI
10	I	SMD 1	21	O	WCLP	32	O	APC EN	43	I	SH2
11	I	SMD 2	22	I	TSMD	33	O	PBOUT	44	O	SHO

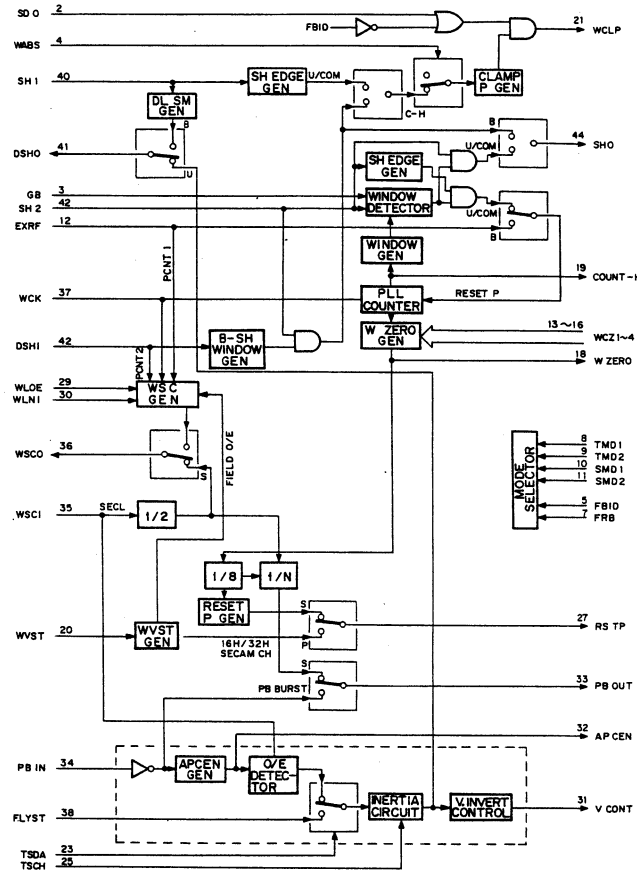

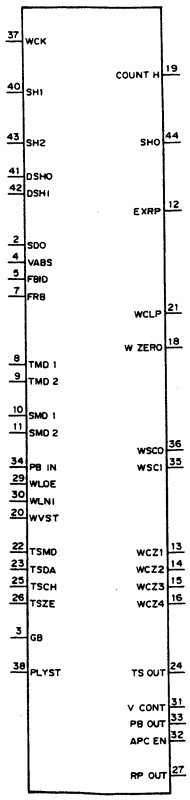


```
APC EN ; APC ENABLE
COUNT H; COUNTER H
DSHI   ; DELAYED SH IN
DSHO   ; DELAYED SH OUT
EXRP   ; EXT RESET PULSE
F BID  ; FAST BIDIREX
FR B   ; FAST REVERSE BIDIREX
GB     ; GATED H
PB IN  ; PB BURST IN
PB OUT ; PB BURST OUT
PLYST  ; PLAY STATUS
RP OUT ; RESET PULSE OUT
SDO    ; STRETCHED DOROP OUT
SHO    ; SELECTED H OUT
SH1    ; SELECTED H1
SH2    ; SELECTED H2
SMD1   ; S MODE 1
SMD2   ; S MODE 2
TMD1   ; T MODE 1
TMD2   ; T MODE 2
TSCH   ; TEST COUNTER H
TSDA   ; TEST DATA IN
TSMD   ; TEST MODE
TSOUT  ; TEST OUT
TSZE   ; TEST W ZERO
VABS   ; VIDEO ABSENT
V CONT ; V AXIS CONTROL
WCK    ; WRITE CLOCK
WCLP   ; WRITE CLAMP PULSE
WCZ1   ; WRITE ZERO CONTROL 1
WCZ2   ; WRITE ZERO CONTROL 2
WCZ3   ; WRITE ZERO CONTROL 3
WCZ4   ; WRITE ZERO CONTROL 4
WLNI   ; WRITE LINE N/I
WLOE   ; WRITE LINE O/E
WSCI   ; WRITE SC IN
WSCO   ; WRITE SC OUT
WVST   ; WRITE V SET
W ZERO ; WRITE ZERO
```

CXD1095Q (SONY) FLAT PACKAGE

C-MOS I/O PORT EXPANDER

– TOP VIEW –

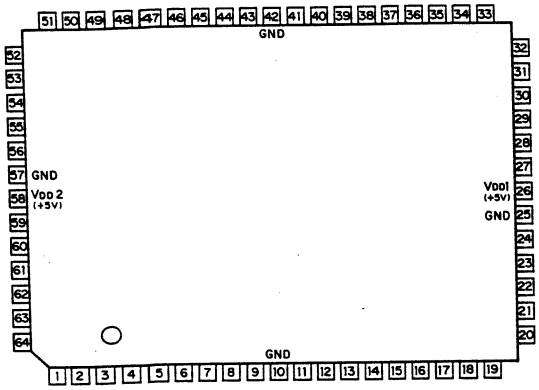

PIN NO.	IN	OUT	SYMBOL	PIN NO.	IN	OUT	SYMBOL	PIN NO.	IN	OUT	SYMBOL	PIN NO.	IN	OUT	SYMBOL
1			NC	17	O	O	PC6	33			NC	49	O	O	PX0
2			NC	18	O	O	PC7	34			NC	50	O	O	PX1
3	O	O	PB1	19			NC	35	O	O	D3	51			NC
4	O	O	PB2	20	O	O	PD0	36	O	O	D4	52	O	O	PX2
5	O	O	PB3	21	O	O	PD1	37	O	O	D5	53	O	O	PX3
6	O	O	PB4	22	O	O	PD2	38	O	O	D6	54	O	O	PA0
7	O	O	PB5	23	O	O	PD3	39	O	O	D7	55	O	O	PA1
8	O	O	PB6	24	O	O	PD4	40	O		CLR	56	O	O	PA2
9	O	O	PB7	25			GND	41	O		RST	57			GND
10			GND	26	O		VDD(+5V)	42			GND	58	O		VDD(+5V)
11	O	O	PC0	27	O	O	PD5	43	O		WR	59	O	O	PA3
12	O	O	PC1	28	O	O	PD6	44	O		RD	60	O	O	PA4
13	O	O	PC2	29	O	O	PD7	45	O		CS	61	O	O	PA5
14	O	O	PC3	30	O	O	D0	46	O		A0	62	O	O	PA6
15	O	O	PC4	31	O	O	D1	47	O		A1	63	O	O	PA7
16	O	O	PC5	32	O	O	D2	48	O		A2	64	O	O	PB0

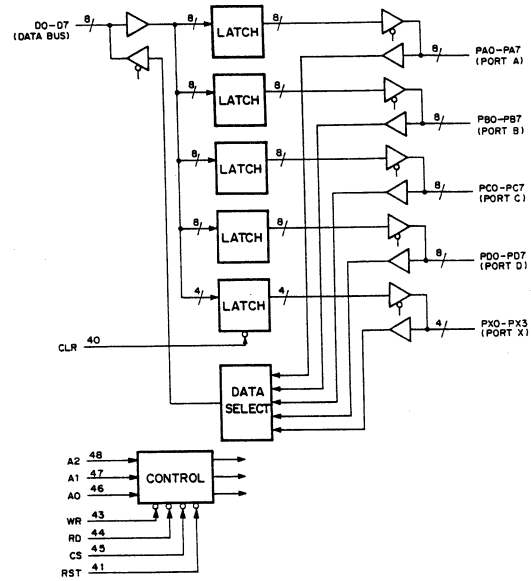

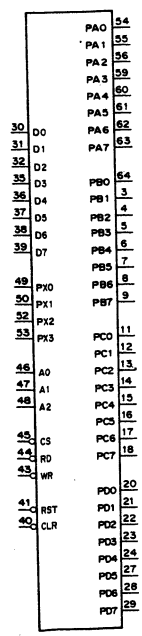

CS	RD	WR	A2	A1	A0	MODE
0	0	1	0	0	0	PORT A → DATA BUS
0	0	1	0	0	1	PORT B → DATA BUS
0	0	1	0	1	0	PORT C → DATA BUS
0	0	1	0	1	1	PORT D → DATA BUS
0	0	1	1	0	0	PORT X → DATA BUS
0	0	1	1	0	1	——
0	0	1	1	1	0	——
0	0	1	1	1	1	——
0	1	0	0	0	0	DATA BUS → PORT A
0	1	0	0	0	1	DATA BUS → PORT B
0	1	0	0	1	0	DATA BUS → PORT C
0	1	0	0	1	1	DATA BUS → PORT D
0	1	0	1	0	0	DATA BUS → PORT X
0	1	0	1	0	1	——
0	1	0	1	1	0	DATA BUS → CTL REG.1
0	1	0	1	1	1	DATA BUS → CTL REG.2
1	X	X	X	X	X	DATA BUS ; HI-Z

0 ; LOW LEVEL
1 ; HIGH LEVEL
X ; DON'T CARE
HI-Z, HIGH IMPEDANCE

D0–D7 ; DATA BUS INPUTS/OUTPUTS
CS ; CHIP SELECT INPUT
RD ; READ STROBE INPUT
WR ; WRITE STROBE INPUT
A0–A2 ; ADDRESS INPUT
RST ; RESET INPUT
CLR ; CLEAR INPUT
PA0–PA7 ; PORT A INPUTS/OUTPUTS
PB0–PB7 ; PORT B INPUTS/OUTPUTS
PC0–PC7 ; PORT C INPUTS/OUTPUTS
PD0–PD7 ; PORT D INPUTS/OUTPUTS
PX0–PX3 ; PORT X INPUTS/OUTPUTS

CXD1131Q (SONY)

C-MOS GATE ARRAY

– TOP VIEW –

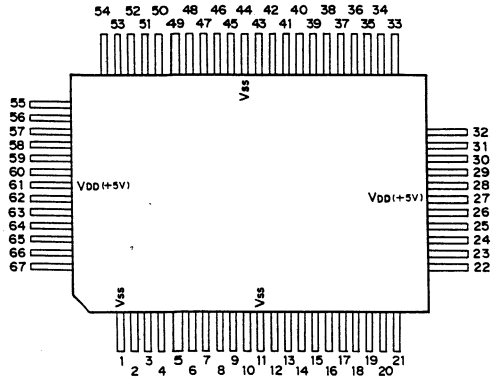

PIN NO	IN/OUT	SYMBOL	PIN NO	IN/OUT	SYMBOL	PIN NO	IN/OUT	SYMBOL	PIN NO	IN/OUT	SYMBOL
1	—	Vss	18	I	BI 3	35	O	BCFM	52	O	A70
2	I	AI 7	19	I	BI 2	36	O	BOO	53	O	ACFP
3	I	AI 6	20	I	BI 1	37	O	BO 1	54	O	ACFM
4	I	AI 5	21	I	BI 0	38	O	BO 2	55	I	XDEN
5	I	AI 4	22	I	BDLO	39	O	BO 3	56	I	XSMT
6	I	AI 3	23	I	BDL1	40	O	BO4	57	I	SYSRT
7	I	AI 2	24	I	BDL2	41	O	BO5	58	I	ADL7
8	I	AI 1	25	I	BDL3	42	O	BO6	59	I	ADL6
9	I	AI O	26	I	BDL4	43	O	BO7	60	I	ADL5
10	I	XDOP	27	—	VDD	44	—	Vss	61	—	VDD
11	—	Vss	28	I	BDL5	45	O	AOO	62	I	ADL4
12	I	RCK	29	I	BDL6	46	O	A10	63	I	ADL3
13	I	X 1HDL	30	I	BDL 7	47	O	A20	64	I	ADL2
14	I	BI7	31	O	AMO	48	O	A30	65	I	ADL1
15	I	BI6	32	O	BMO	49	O	A40	66	I	ADLO
16	I	BI5	33	I	CFDP	50	O	A50	67	I	HOE
17	I	BI4	34	O	BCFP	51	O	A60			

ACFM ;A-ch COLOR FRAME ID MINUS
ACFP ;A-ch COLOR FRAME ID PLUS
ADLO 7 ;A-ch 1H DELAYED INPUT DATA $2^0 \sim 2^7$
AIO 7 ;A-ch INPUT DATA $2^0 \sim 2^7$
AMO ;A-ch OUTPUT DTAT 2
A00 A70 ;A-ch OUTPUT DATA $2^0 \sim 2^7$
BCFM ;B-ch COLOR FRAME ID MINUS
BCFP ;B-ch COLOR FRAME ID PLUS
BDLO 7 ;B-ch 1H DELAYED INPUT DATA $2^0 \sim 2^7$
BIO 7 ;B-ch INPUT DATA $2^0 \sim 2^7$
BOO 7 ;B-ch OUTPUT DATA $2^0 \sim 2^7$
BMO ;B-ch OUTPUT DATA 2
CFDP ;COLOR FRAME ID DETECT PULSE
HOE ;H; OUTPUT ENABLE
RCK ;READ CK
SYSRT ;SYSTEM RESET
X DEN ;CORRELATION DETECT ENABLE
X DOP ;DROP OUT PULSE
X SMT ;SMOOTHING
X 1HDL ;1HDL SELECT

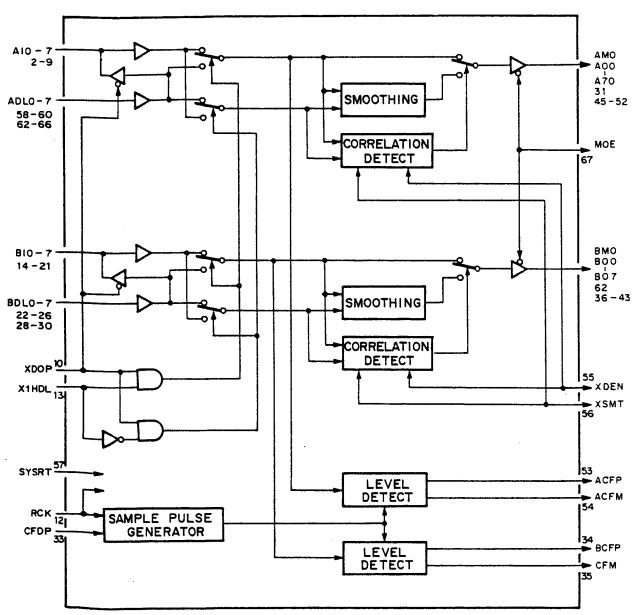

CXD1217M (SONY) FLAT PACKAGE

C-MOS SYNC GENERATOR

– TOP VIEW –

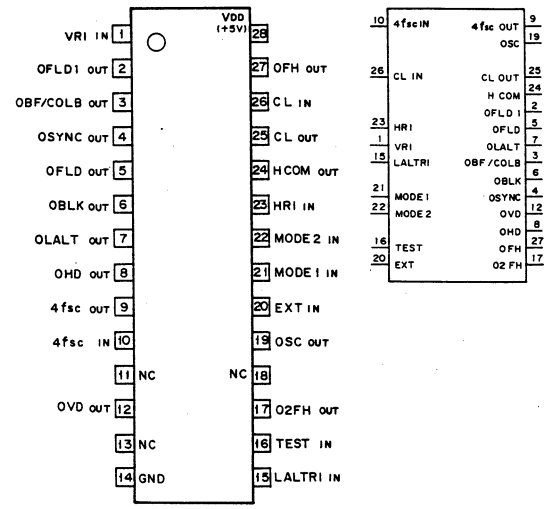

SYSTEM	4fsc	CLOCK
NTSC	910fH	910fH
PAL	1135fH+2fV	908fH
PALM	909fH	910fH
SECAM	—	908fH

INPUT		SYSTEM
MODE1	MODE2	
0	0	NTSC
0	1	SECAM
1	0	PALM
1	1	PAL

0 ; LOW LEVEL
1 ; HIGH LEVEL

(NTSC, PALM)

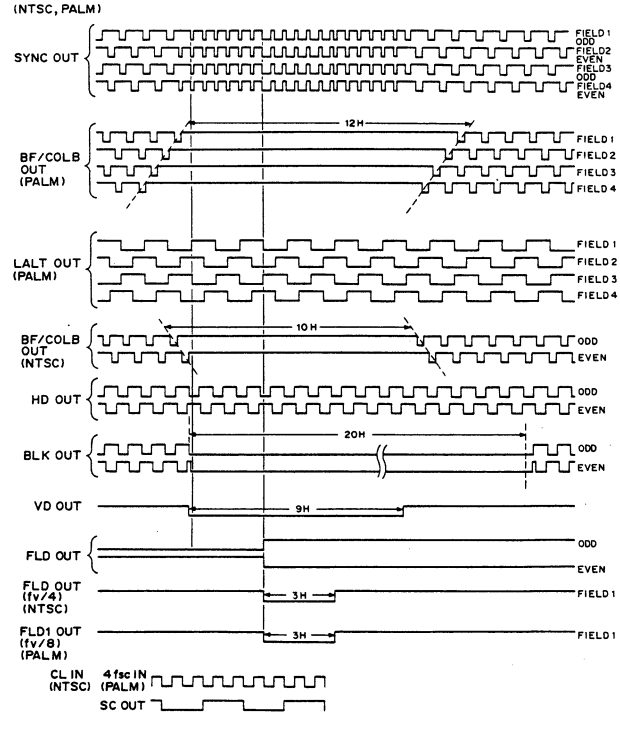

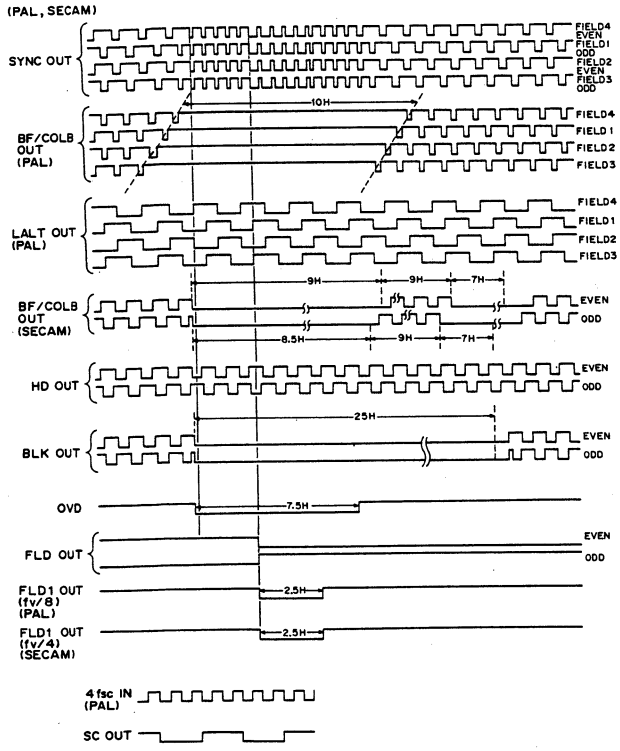

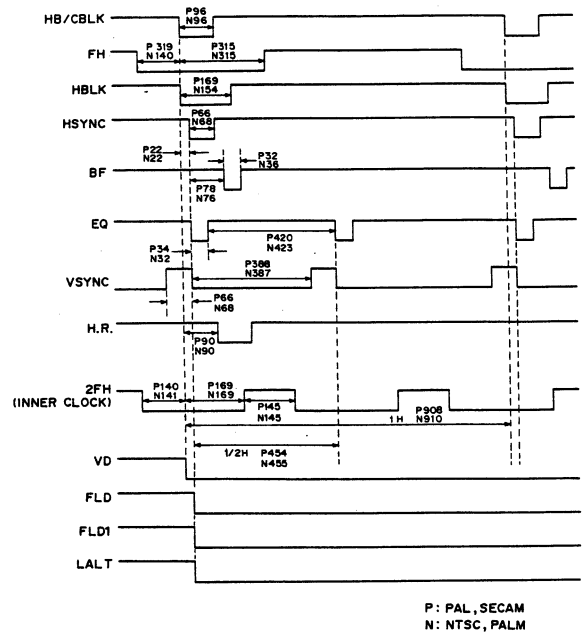

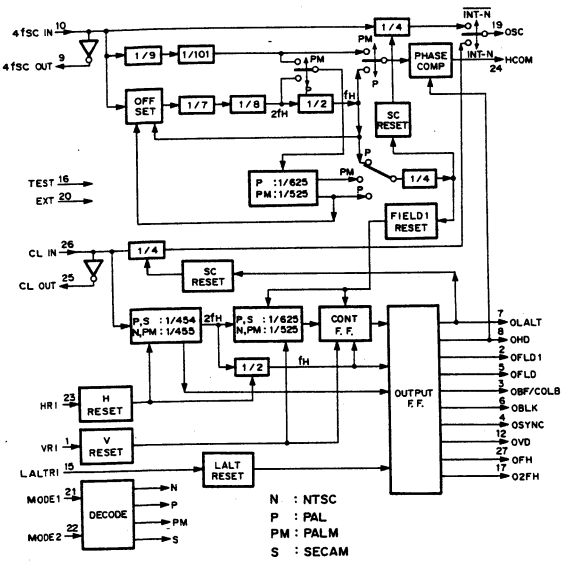

INPUT

4fSC IN	; 4fSC INPUT
CL IN	; CLOCK INPUT
EXT	; SYNC MODE SELECT (L ; INTERNAL/H ; EXTERNAL)
HRI	; H RESET
LALTRI	; LINE CHANGE RESET
MODE 1,2	; SYSTEM SELECT
VRI	; V RESET

OUTPUT

4fSC OUT	; 4fSC OUTPUT
CL OUT	; CLOCK OUTPUT
HCOM	; PHASE COMPARATOR
O2fH	; 2fH OUTPUT
OBF/COLB	; BURST FLAG/COLOR BLANKING
OBLK	; COMPOSITE BLANKING
OFH	; H FREQUENCE
OFLD	; EVEN, ODD
OFLD1	; FIELD1
OHD	; H DRIVE
OLALT	; LINE CHANGE
OSC	; SUBCARRIER
OSYNC	; COMPOSITE SYNC
OVD	; V DRIVE

CXD8024Q (SONY) FLAT PACKAGE

C-MOS TIME BASE CORRECTOR

– TOP VIEW –

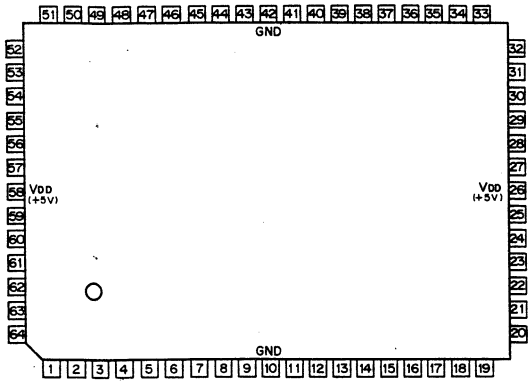

PIN NO.	I/O	SYMBOL	PIN NO.	I/O	SYMBOL	PIN NO.	I/O	SYMBOL	PIN NO.	I/O	SYMBOL
1	I	$\overline{XVDL}$	17	I	BY5	33	I	$\overline{XSVD}$	49	O	$\overline{YSLV}$
2	I	$\overline{XDT}$	18	I	XCDO	34	I	$\overline{NBLK}$	50	O	$\overline{CWCX}$
3	I	$\overline{XNSG}$	19	I	YGB	35	I	$\overline{XFBD}$	51	I	$\overline{CVDL}$
4	I	$\overline{XBID}$	20	I	$\overline{CGB}$	36	O	$\overline{MSNC}$	52	I	MOD2
5	I	$\overline{XFFB}$	21	I	YCNH	37	O	$\overline{XLCC}$	53	O	$\overline{XFST}$
6	I	$\overline{XRVD}$	22	I	CCNH	38	O	$\overline{OBLK}$	54	O	$\overline{VBLK}$
7	I	$\overline{RFH}$	23	I	$\overline{YSDO}$	39	O	$\overline{YWDO}$	55	O	CTCK
8	I	ZCK	24	I	$\overline{CSDO}$	40	O	$\overline{XDLV}$	56	O	$\overline{CWDO}$
9	I	WCK	25	I	$\overline{YSNC}$	41	O	$\overline{CFDT}$	57	I	HUBL
10	–	GND	26	–	V_{DD}	42	–	GND	58	–	V_{DD}
11	I	$\overline{HBLK}$	27	I	$\overline{CSNC}$	43	O	$\overline{DTNG}$	59	I	$\overline{CLR}$
12	I	$\overline{XPBV}$	28	I	$\overline{YWZ}$	44	O	HCFP	60	I	TST1
13	I	$\overline{XDTV}$	29	I	$\overline{CONF}$	45	O	HCFM	61	I	TST2
14	I	FLOE	30	I	HJUL	46	O	$\overline{YERX}$	62	I	TST3
15	I	BY7	31	I	HFBK	47	O	$\overline{CERX}$	63	I	TDAT
16	I	BY6	32	I	CBLK	48	O	$\overline{YGRY}$	64	I	$\overline{N3HD}$

INPUT

$\overline{XRVD}$	: REF VD
HFBK	: HARF・H BLANKING PULSE
CBLK	: COMPOSITE BLANKING PULSE
$\overline{XPBV}$	: PB-V
$\overline{XDTV}$	: DT-V
$\overline{XSVD}$	: SERVO VD
FLOE	: REF FIELD O/E
YCNH	: Y-CH COUNTER H
WCK	: WRITE CLOCK
$\overline{RFH}$	: REF FH
XCDO	: CHROMA READ DO PULSE
BY5 – 7	: CHROMA B-Y READ 2^5-2^7
$\overline{YSNC}$	: Y-CH PB SYNC
$\overline{YSDO}$	: Y-CH STRETCHED DO
YGB	: Y-CH GUARD BAND PULSE
$\overline{CSDO}$	: C-CH STRETCHED DO
$\overline{CGB}$	: C-CH GUARD BAND PULSE
$\overline{CSNC}$	: C-CH PB SYNC
$\overline{YWZ}$	: Y-CH WRITE ZERO
$\overline{HBLK}$	: H : BLANKING
$\overline{NBLK}$	: NARROW H : BLANKING PULSE
ZCK	: ZERO CLOCK
CCNH	: C-CH COUNTER H
$\overline{XVDL}$	: L : VIDEO DELAY MODE (CASE OF CONF = HIGH)
$\overline{XDT}$	: L : DT MODE
$\overline{XNSG}$	: L : NO SIGNAL
$\overline{XBID}$	: L : BIDIREX H : NORMAL
$\overline{XFFB}$	: L : FAST FORWARD BIDIREX
$\overline{CLR}$	: H : CLEAR
$\overline{CONF}$	: L : CONFI MODE
HJUL	: H : JAPAN L : USA/CANADA
$\overline{XFBD}$	: L : FAST BIDIREX
$\overline{CVDL}$	: L : VIDEO DELAY MODE (CASE OF CONF = LOW)
MOD2	: H : 525 L : 625
HUBL	: H : U-MATIC L : BETACAM
TST1 – 3	: TEST MODE 1 – 3. L : NORMAL
TDAT	: TEST SIGNAL (CASE OF TST3 = HIGH) H : 13.5MHz L : 4FSC (CASE OF TST3 = LOW)
$\overline{N3HD}$	: H : VISC ERASE MODE

OUTPUT

$\overline{XDLV}$	: DELAYED REF VD
$\overline{VBLK}$	: V-BLANKING PULSE
$\overline{XLCC}$	: LINE ADD CONTROL
$\overline{YSLV}$	: Y-CH SELECT・V
$\overline{CWCX}$	: CHROMA WRITE CLAMP INHIBIT
$\overline{CFDT}$	: COLOR FRAME ID BLANKING PULSE
$\overline{DTNG}$	: L : COLOR FRAME ID DETECT IS NOT GOOD
HCFP	: H : COLOR FRAME ID PLSE
HCFM	: H : COLOR FRAME ID MINUS
$\overline{MSNC}$	: PB SYNC (H CYCLE)
$\overline{YGRY}$	: Y-CH GRAY SWITCH CONTROL
$\overline{YERX}$	: Y-CH ERROR SAMPLE INHIBIT
$\overline{CERX}$	: C-CH ERROR SAMPLE INHIBIT
$\overline{YWDO}$	: PEDESTAL INHIBIT YSDO
$\overline{CWDO}$	: CHROMA WRITE DO PULSE
$\overline{OBLK}$	: DIGITAL BLANK CONTROL
CTCK	: REF 2FH CLOCK
$\overline{XFST}$	: XFBD LATCHED BY XSVD

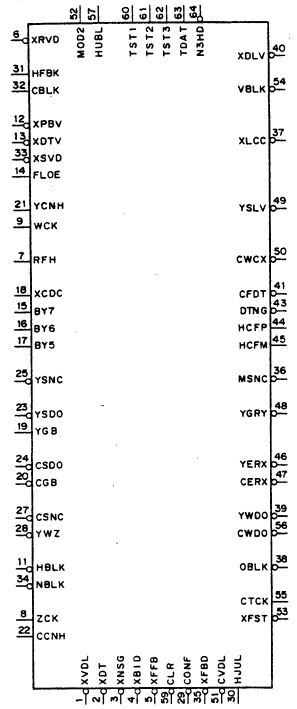

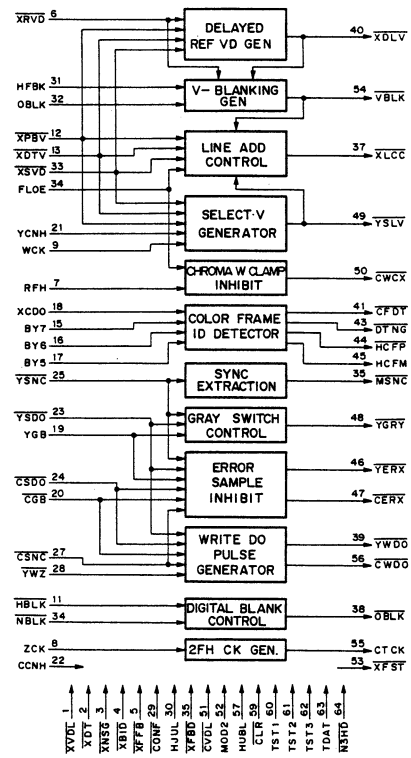

CXD8117P (SONY)

C-MOS DIAL DATA DECODER

– TOP VIEW –

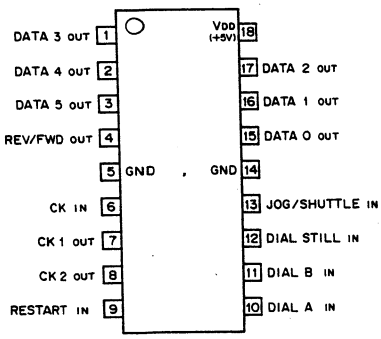

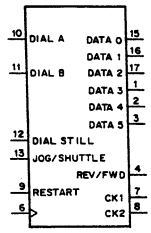

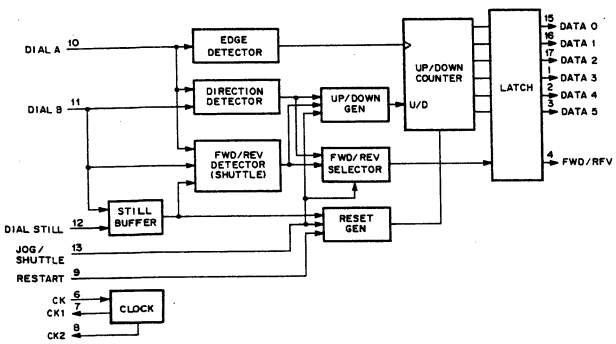

CXK5816M-12L (SONY) (ACCESS TIME 120nS)

C-MOS 16K (2Kx8-BIT) STATIC RAM

– TOP VIEW –

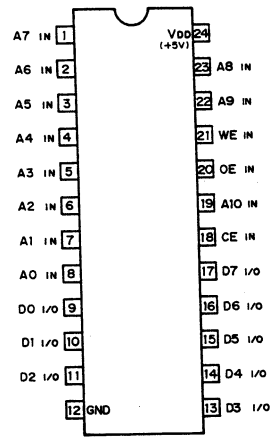

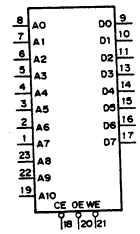

A0–A10; ADDRESS INPUTS
CE ; CHIP ENABLE INPUT
DO–D7 ; DATA INPUTS/OUTPUTS
OE ; OUTPUT ENABLE INPUT
WE ; WRITE ENABLE INPUT

MODE SELECTION

CONTROL INPUTS			MODE
CE	OE	WE	
1	X	X	NO CHANGE
0	1	1	DISABLE OUTPUT
0	0	1	READ
0	1	0	WRITE

0 ; LOW LEVEL
1 ; HIGH LEVEL
X ; DON'T CARE

CXK1202S (SONY)

C-MOS DIGITAL DELAY LINE

– TOP VIEW –

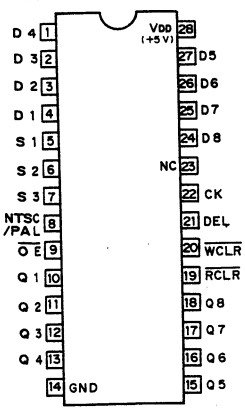

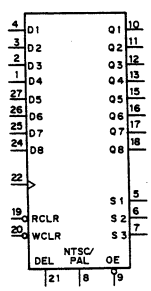

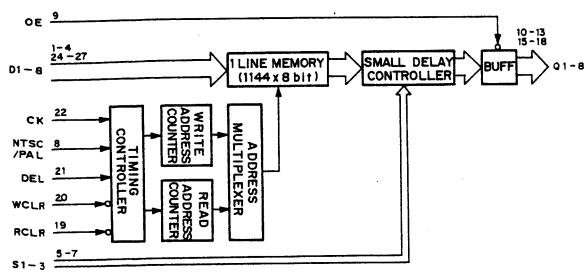

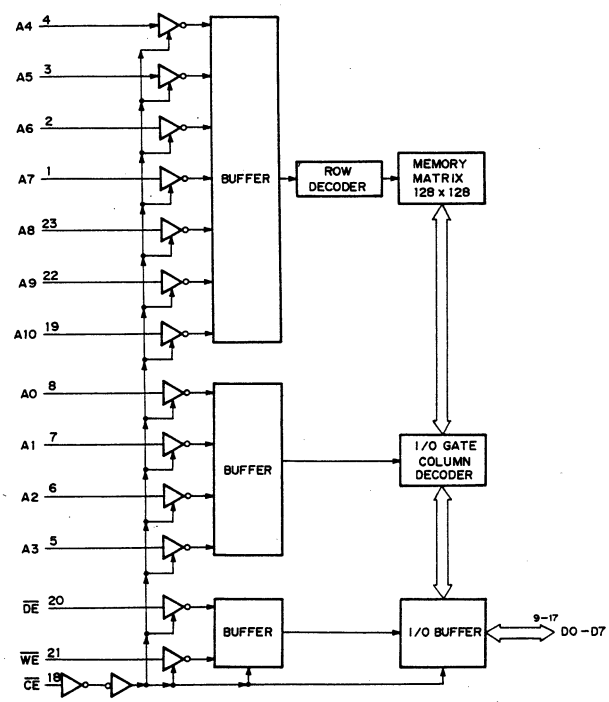

CXK5816PN-12L (SONY) (ACCESS TIME = 120nS)

C-MOS 16384-BIT (2048×8) STATIC RAM

– TOP VIEW –

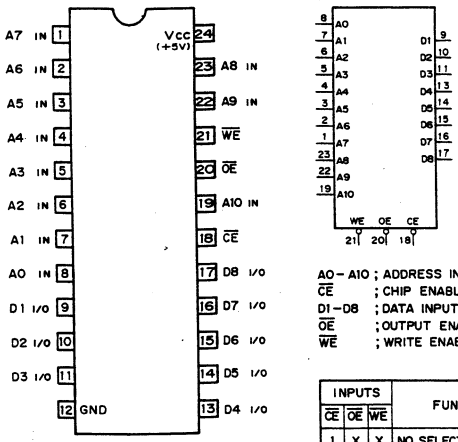

A0 – A10 ; ADDRESS INPUTS
$\overline{CE}$; CHIP ENABLE
D1 – D8 ; DATA INPUTS/OUTPUTS
$\overline{OE}$; OUTPUT ENABLE
$\overline{WE}$; WRITE ENABLE

INPUTS			FUNCTION
$\overline{CE}$	$\overline{OE}$	$\overline{WE}$	
1	X	X	NO SELECTION(HI–Z)
0	1	1	OUTPUT DISABLE(HI–Z)
0	0	1	READ
0	X	0	WRITE

0 ; LOW LEVEL
1 ; HIGH LEVEL
X ; DON'T CARE
HI–Z ; HIGH IMPEDANCE

CXK5864BP-12L (SONY) (ACCESS TIME = 120nS)

C-MOS 64K(8192×8)-BIT STATIC RAM

– TOP VIEW –

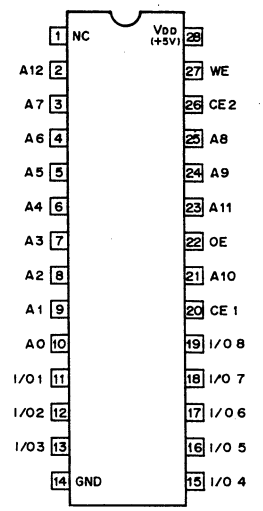

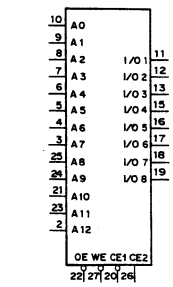

A0–A12 ; ADDRESS INPUT
CE1, CE2 ; CHIP ENABLE INPUT
I/O1–I/O8 ; DATA INPUT/OUTPUT
OE ; OUTPUT ENABLE INPUT
WE ; WRITE ENABLE INPUT

CE1	CE2	OE	WE	MODE	I/O TERMINAL
1	X	X	X	NOT SELECT	HIGH IMPEDANCE
X	0	X	X	NOT SELECT	HIGH IMPEDANCE
0	1	1	1	OUTPUT DISABLE	HIGH IMPEDANCE
0	1	0	1	READ	OUTPUT DATA
0	1	X	0	WRITE	INPUT DATA

0;LOW LEVEL
1;HIGH LEVEL
X;DON'T CARE

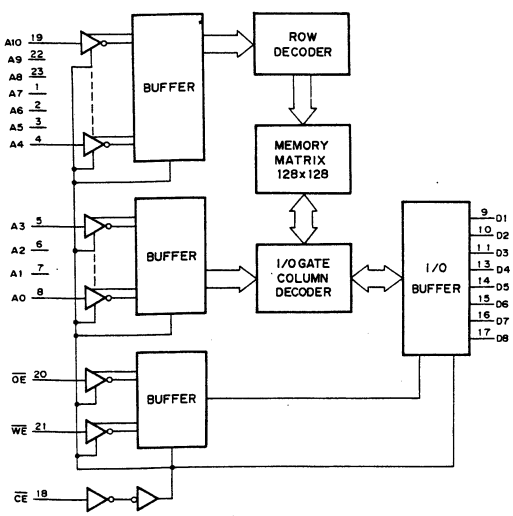

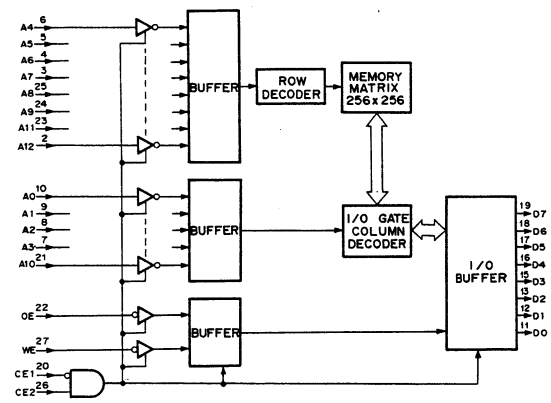

HA12411 (HITACHI)

FM IF AMPLIFIER
QUADRATURE DETECT
AUDIO AMPLIFIER
MUTING
AFC
AGC
TUNING METER DRIVER

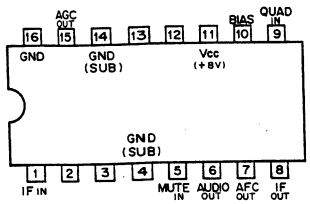

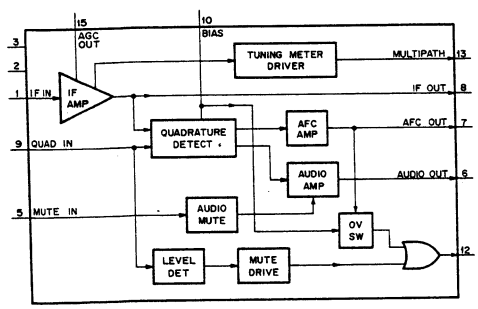

LM2903DQ (RAYTHEON)
LM2903M (RAYTHEON) FLAT PACKAGE
uPC393G2 (NEC) FLAT PACKAGE

DUAL VOLTAGE COMPARATORS
– TOP VIEW –

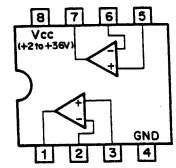

LA7205 (SANYO)

AGC AMP, INPUT SELECT, AGC DET, COMPARATOR
– SIDE VIEW –

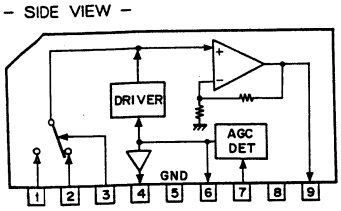

M50747-XXXSP

C-MOS PROCESS 8-BIT ONE CHIP MICROCOMPUTER

– TOP VIEW –

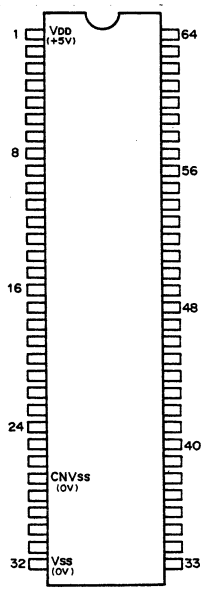

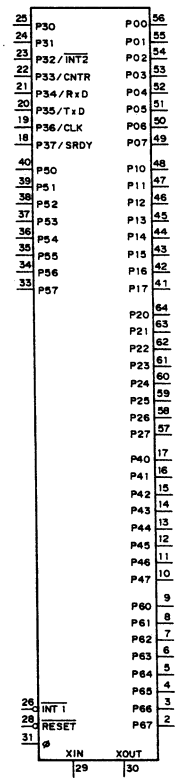

INT 1 ; INTERRUPT 1 IN

P00–P07 ;
P10–P17 ;
P20–P27 ;
P30–P37 ;
P40–P47 ; } 8 BIT I/O PORT

P50–P57 ; 8 BIT IN PORT

P60–P67 ; 8 BIT OUT PORT

RESET ; RESET IN (⌐└)

X IN/OUT ; CLOCK IN/OUT

ø ; CLOCK TIMING OUT

P32/INT2 ; PORT/INTERRUP2 IN/OUT

P33/CNTR ; PORT/CONTROL IN/OUT

P34/RXD ; RECEIVED DATA

P35/TXD ; TRANCEMITTED DATA

P36/CLK ; PORT/CLOCK IN/OUT

P37/SRDY ; SERIAL IN READY

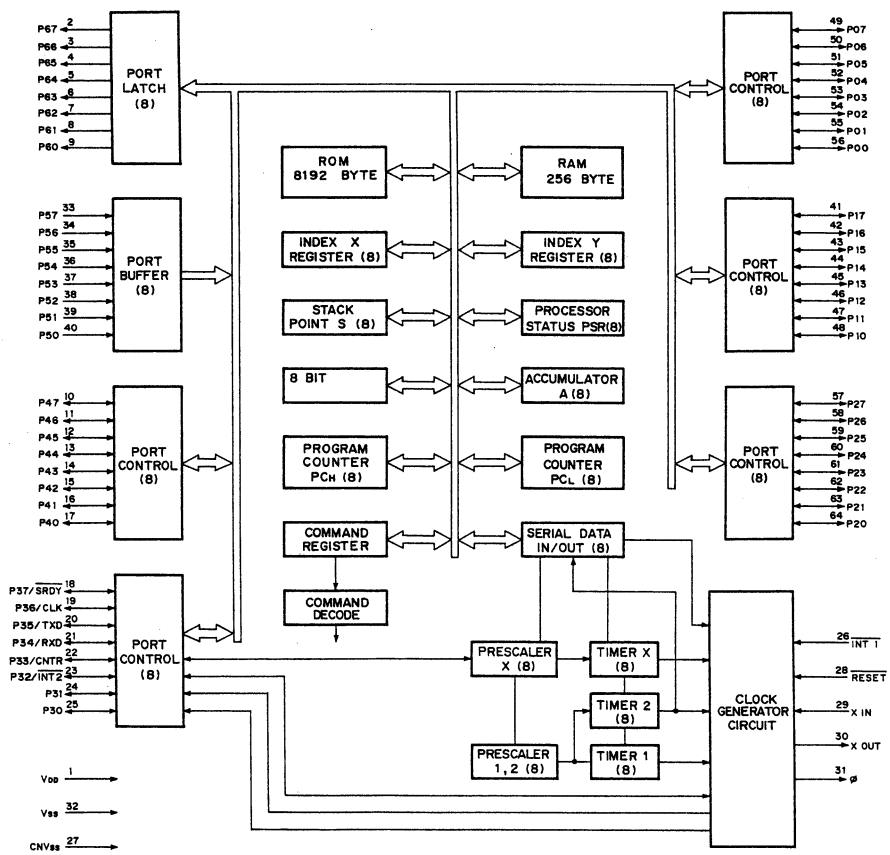

M51958BL (MITSUBISHI)

VOLTAGE DETECT DELAY
– PRINTED SIDE VIEW –

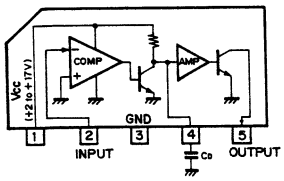

TIMING CHART

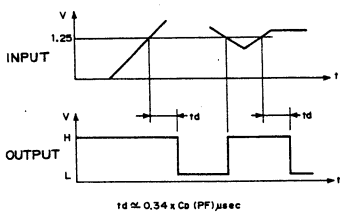

td ≃ 0.34 x Cd (PF) μsec

M5215TL (MUTSUBISHI)

FM IF AMPLIFIER
– SIDE VIEW –

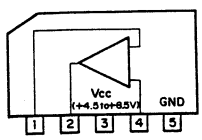

M5236L (MITSUBISHI)

ADJUSTABLE VOLTAGE REGULATOR

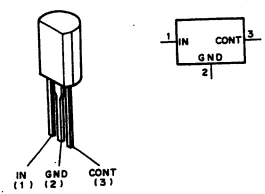

M54516P (MITSUBISHI)

INVERTER WITH OPEN-COLLECTOR
(DARLINGTON-CONNECTED TRANSISTOR ARRAY)
– TOP VIEW –

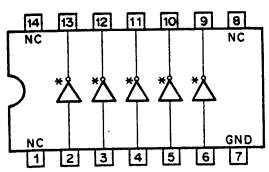

M54523P (MITSUBISHI)

BIPOLAR TRANSISTOR ARRAY WITH OPEN COLLECTOR
– TOP VIEW –

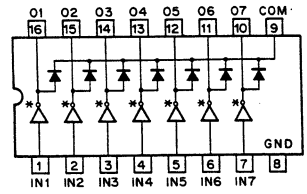

COM : COMMON

M54529AP (MITSUBISHI)

TRANSISTOR ARRAY
– TOP VIEW –

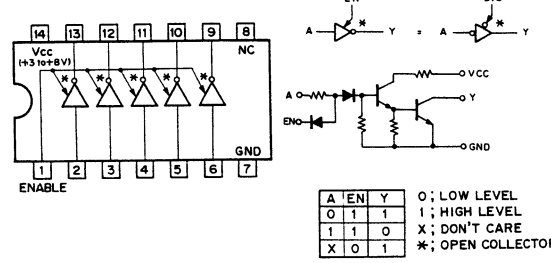

A	EN	Y
0	1	1
1	1	0
X	0	1

0 ; LOW LEVEL
1 ; HIGH LEVEL
X ; DON'T CARE
✱ ; OPEN COLLECTOR

M54532P (MITSUBISHI)

DARLINGTON TRANSISTOR ARRAY WITH CLAMP DIODE
– TOP VIEW –

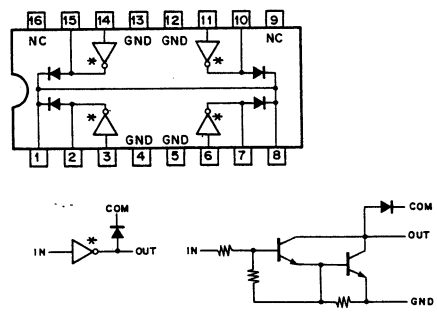

MB4002PF (FUJITSU) FLAT PACKAGE

HIGH SPEED VOLTAGE COMPARATOR
– TOP VIEW –

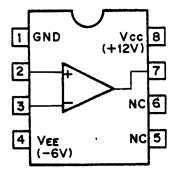

MB40778P (FUJITSU)

8-BIT VIDEO D/A CONVERTER

– TOP VIEW –

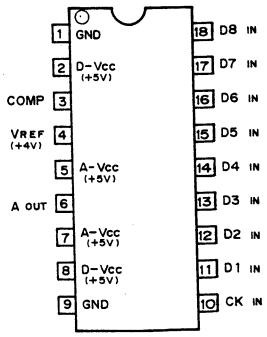

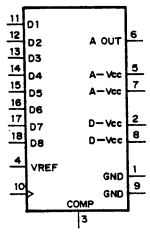

A OUT ; ANALOG OUTPUT
CK ; CLOCK INPUT
COMP ; COMPENSATION
D1–D8 ; DIGITAL INPUTS
VREF ; REFERENCE VOLTAGE INPUT

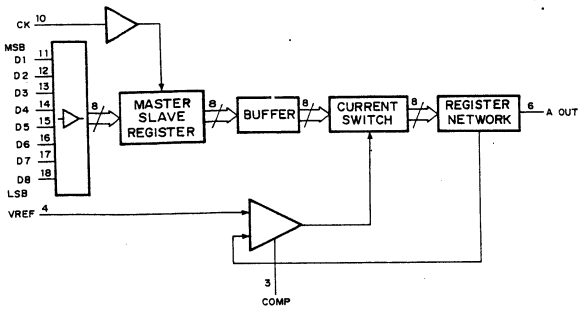

MB88303 (FUJITSU)

N-MOS PROGRAMMABLE TV DISPLAY CONTROLLER

– TOP VIEW –

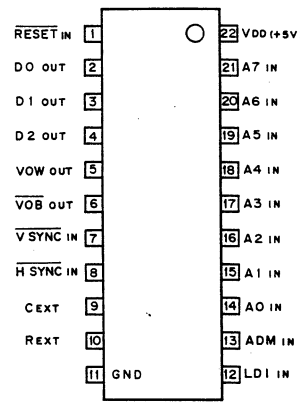

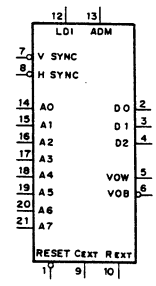

ADM ; ADDRESS INCREMENT MODE
A0 to A7 ; ADDRESS INPUT
DO to D2 ; DATA OUTPUT
CEXT ; EXT CAPACITOR FOR OSC
LDI ; LOAD DATA AND INSTRUCTION
VOB ; VIDEO BLACK OUT
VOW ; VIDEO WHITE OUT
REXT ; EXT RESISTOR FOR OSC

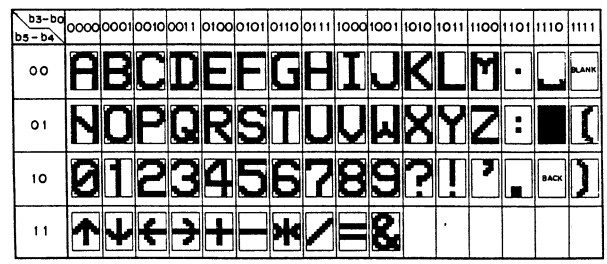

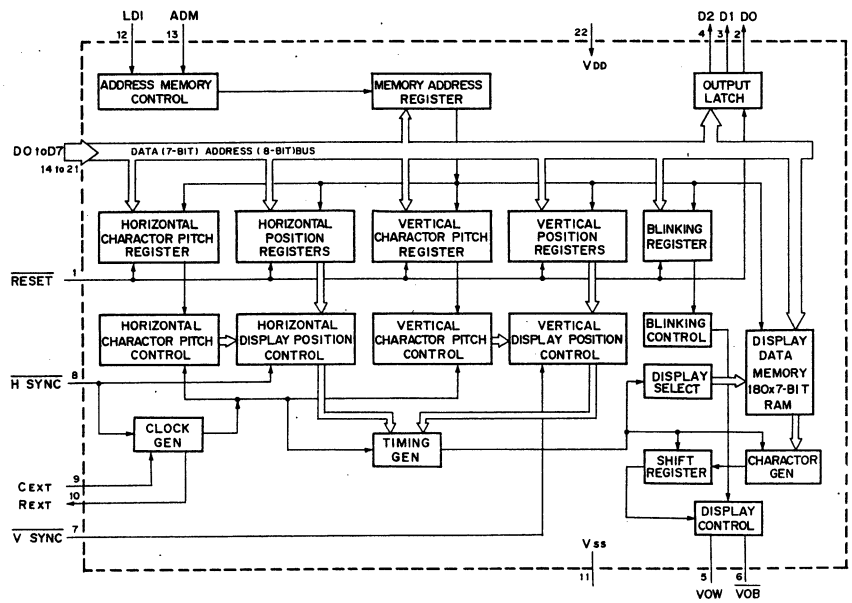

MB88515B-280M (FUJITSU)

C-MOS 4 BIT ONE-CHIP MICROCOMPUTER WITH MULTI I/O AND 8 BIT A/D CONVERTER

– TOP VIEW –

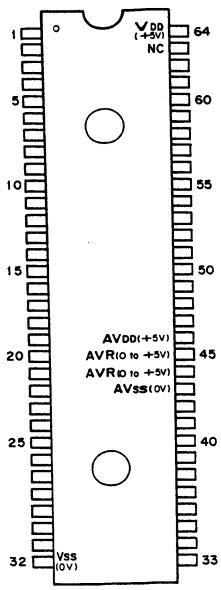

PIN NO	IN	OUT	SYMBOL	PIN NO	IN	OUT	SYMBOL
1		○	E0	33	○	○	R0
2		○	E1	34	○	○	R1
3		○	E2	35	○	○	R2
4		○	E3	36	○	○	R3
5		○	E4	37	○	○	R4
6		○	E5	38	○	○	R5
7		○	E6	39	○	○	R6
8		○	E7	40	○	○	R7
9		○	E8	41	○	○	E37/START
10		○	E9	42	○	○	E36/TC
11		○	E10	43			AVss
12		○	E11	44			AVR−
13		○	E12	45			AVR+
14		○	E13	46			AVDD
15		○	E14	47	○	○	E35/AN7
16		○	E15	48	○	○	E34/AN6
17		○	E16	49	○	○	E33/AN5
18		○	E17	50	○	○	E32/AN4
19		○	E18	51	○	○	E31/AN3
20		○	E19	52	○	○	E30/AN2
21		○	E20	53	○	○	E29/AN1
22		○	E21	54	○	○	E28/AN0
23		○	E22	55	○	○	R8
24		○	E23	56	○	○	R9
25	○		EX	57	○	○	R10
26		○	X	58	○	○	R11
27	○	○	RESET	59	○	○	R12
28		○	E24/SO	60	○	○	R13
29	○	○	E25/SI	61	○	○	R14
30	○	○	E26/SC/TO	62	○	○	R15
31	○	○	E27/IRQ	63	—	—	—
32			Vss	64			VDD

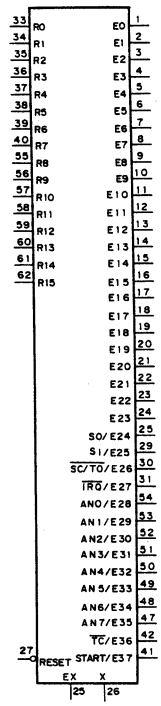

AN0-AN3; ANALOG INPUT PORT IN
AN4-AN7; ANALOG INPUT PORT IN OR
HIGH IMPEDANCE ANALOG INPUT PORT IN
E0-E24 ; I/O PORT (E PORT) OUT
E25-E37; I/O PORT (E PORT) IN/OUT
EX ; EXTERNAL CLOCKIN
IRQ ; EXTERNAL INTERRUPT REQUEST IN (↓)
R0-R15 ; I/O PORT (R PORT) IN/OUT
RESET ; RESET IN/OUT
SC/TO ; SHIFT CLOCK IN/TIMING OUT
SI ; SERIAL DATA IN
SO ; SERIAL DATA OUT
START ; START IN/OUT
TC ; EXTERNAL CLOCK IN FOR COUNTER (↓)
X ; CLOCK OUT

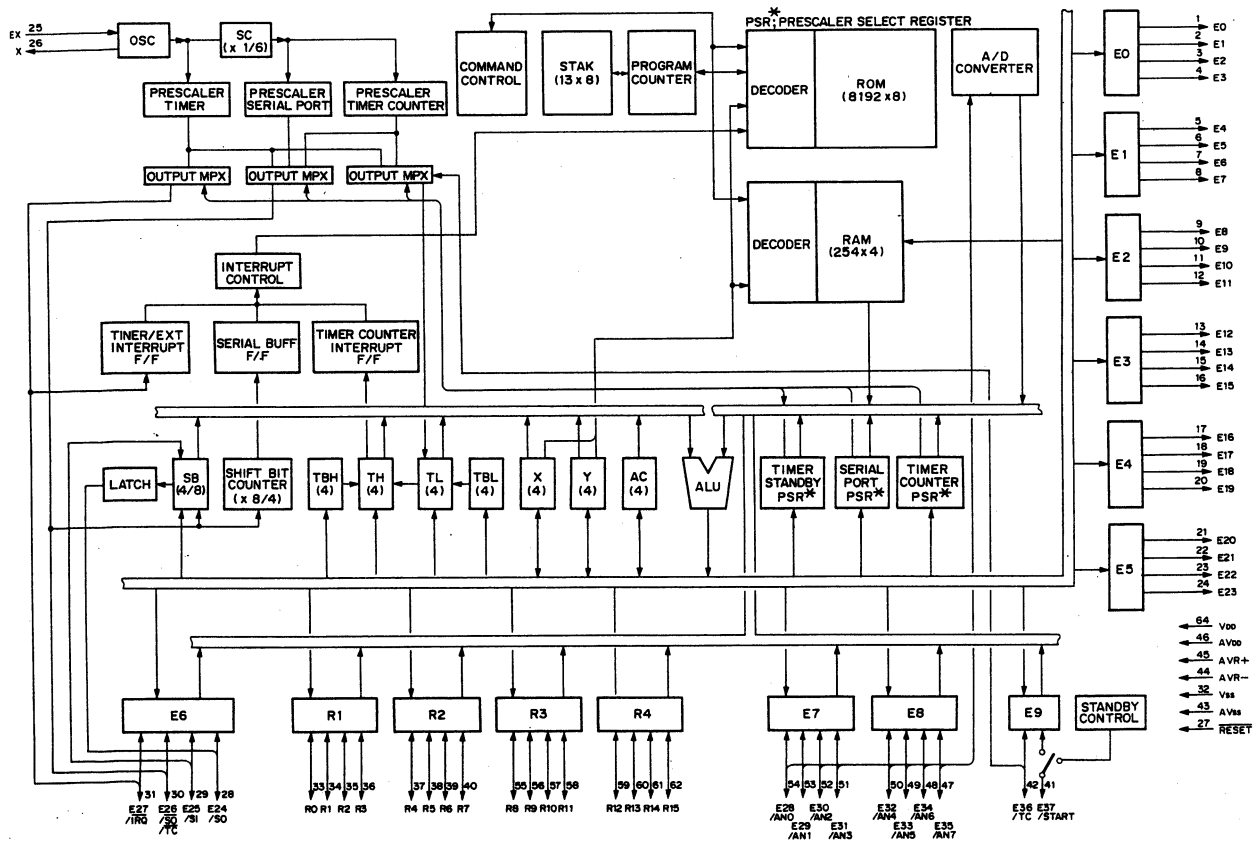

MB88525-190M (FUJITSU)

C-MOS 4-BIT ONE-CHIP MICROCOMPUTER WITH MULTI I/O

– TOP VIEW –

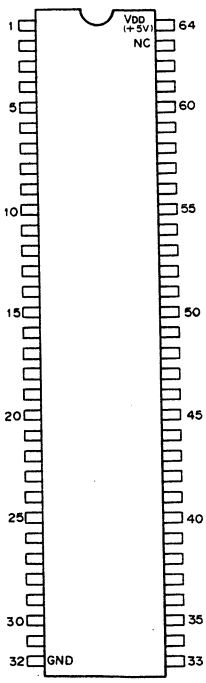

PIN NO.	IN	OUT	SYMBOL	PIN NO.	IN	OUT	SYMBOL
1	○	○	R0	33		○	S0
2	○	○	R1	34	○	○	E0
3	○	○	R2	35	○	○	E1
4	○	○	R3	36	○	○	E2
5	○	○	R4	37	○	○	E3
6	○	○	R5	38	○	○	E4
7	○	○	R6	39	○	○	E5
8	○	○	R7	40	○	○	E6
9	○	○	R8	41	○	○	E7
10	○	○	R9	42	○	○	E8
11	○	○	R10	43	○	○	E9
12	○	○	R11	44	○	○	E10
13	○	○	R12	45	○	○	E11
14	○	○	R13	46	○	○	E12
15	○	○	R14	47	○	○	E13
16	○	○	R15	48	○	○	E14
17	○		K0	49	○	○	E15
18	○		K1	50	○	○	E16
19	○		K2	51	○	○	E17
20	○		K3	52	○	○	E18
21		○	O0	53	○	○	E19
22		○	O1	54	○	○	E20
23		○	O2	55	○	○	E21
24		○	O3	56	○	○	E22
25	○		EX	57	○	○	E23
26		○	X	58		○	P0
27	○	○	$\overline{RESET}$	59		○	P1
28	○		$\overline{IRQ}$	60		○	P2
29	○		$\overline{TC}$	61		○	P3
30	○	○	$\overline{SC}/\overline{TO}$	62	○		START
31	○		SI	63	—	—	——
32			GND	64			VDD

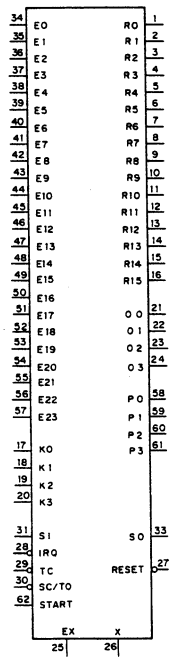

E0–E23	:	I/O PORT (E) IN/OUT
EX	:	EXTERNAL CLOCK IN
$\overline{IRQ}$	:	EXTERNAL INTERRUPT REQUEST IN
K0–K3	:	INPUT PORT(K) IN
O0–O3	:	OUTPUT PORT(O) OUT
P0–P3	:	OUTPUT PORT(P) OUT
R0–R15	:	I/O PORT (R) IN/OUT
$\overline{RESET}$	:	RESET IN
$\overline{SC}/\overline{TO}$	:	SHIFT CLOCK IN/TIMING OUT
SI	:	SERIAL DATA IN
START	:	STANDBY RELEASE IN
SO	:	SERIAL DATA OUT
$\overline{TC}$	:	EXTERNAL CLOCK IN
X	:	CLOCK OUT

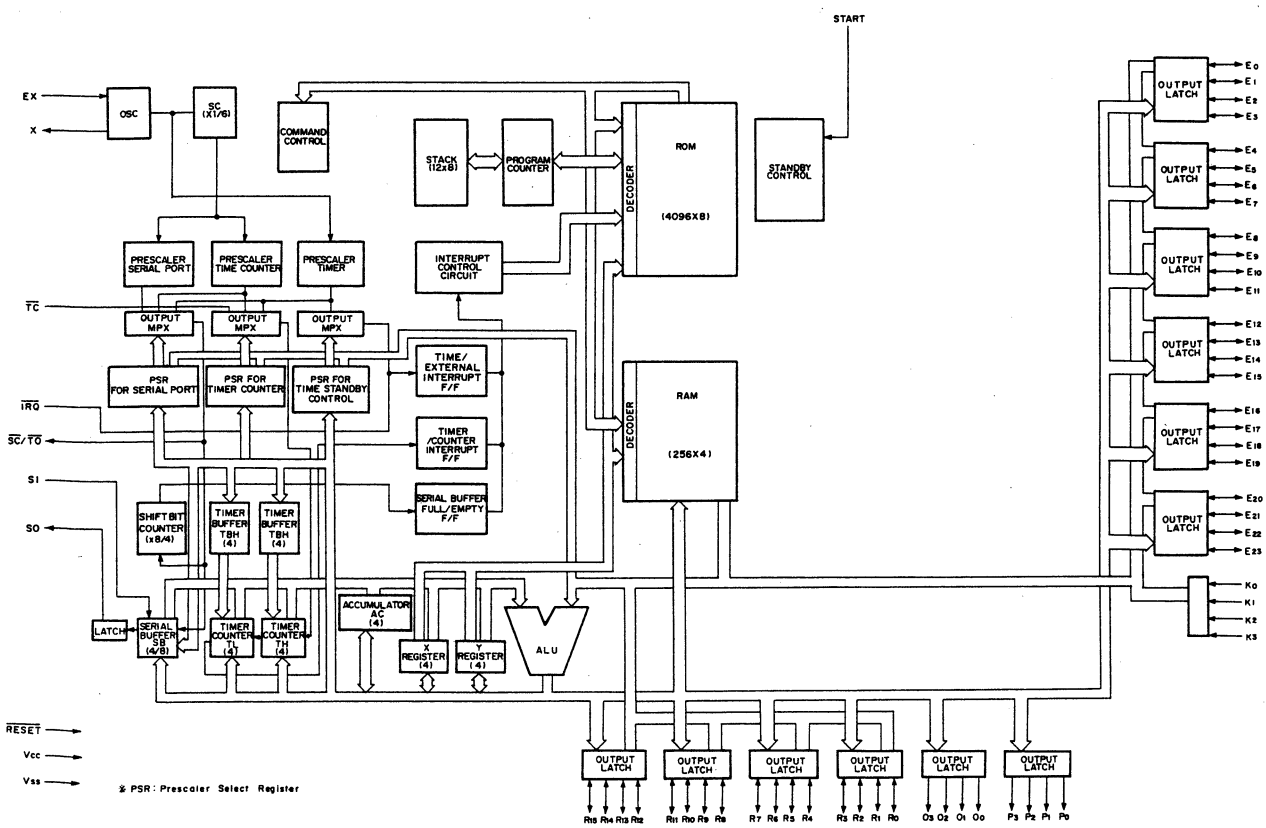

MBM2212-20P (FUJITSU) (ACCESS TIME = 200nS)

N-MOS 1024 (256x4)-BIT NONVOLATILE STATIC RAM

– TOP VIEW –

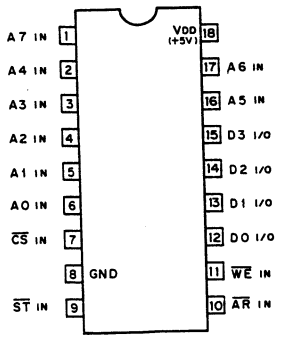

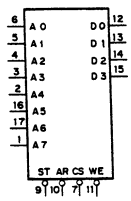

A0 – A7	; ADDRESS INPUTS
AR	; ARRAY RECALL
CS	; CHIP SELECT
DO – D3	; DATA INPUT/OUTPUT
ST	; STORE
WE	; WRITE ENABLE

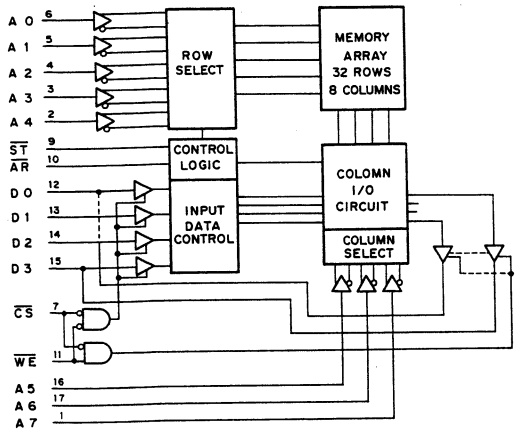

INPUTS				I/O	MODE
$\overline{CS}$	$\overline{WE}$	$\overline{AR}$	$\overline{ST}$		
1	X	1	1	HI-Z	NOT SELECTED
0	1	1	1	OUTPUT DATA	RAM READ
0	0	1	1	INPUT DATA 1	RAM WRITE "1"
0	0	1	1	INPUT DATA 0	RAM WRITE "0"
X	1	0	1	HI-Z	ARRAY RECALL
1	X	0	1	HI-Z	ARRAY RECALL
X	1	1	0	HI-Z	NONVOLATILE STORING
1	X	1	0	HI-Z	NONVOLATILE STORING

0 ; LOW LEVEL
1 ; HIGH LEVEL
X ; DON'T CARE
HI-Z ; HIGH IMPEDANCE

MBM27C128-25 (FUJITSU) (ACCESS TIME = 250nS)

C-MOS 131,072-BIT EPROM

– TOP VIEW –

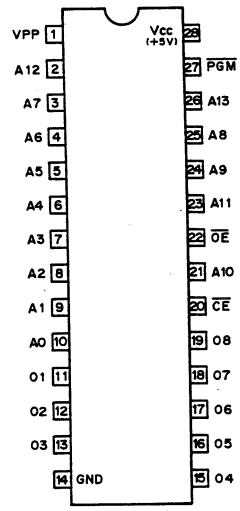

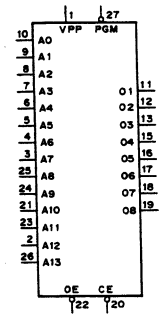

A0-13:ADDRESS INPUT
$\overline{CE}$:CHIP ENABLE
O1-8 :DATA OUTPUT
$\overline{OE}$:OUTPUT ENABLE
$\overline{PGM}$:PROGRAM ENABLE
VPP :PROGRAM POWER SUPPLY

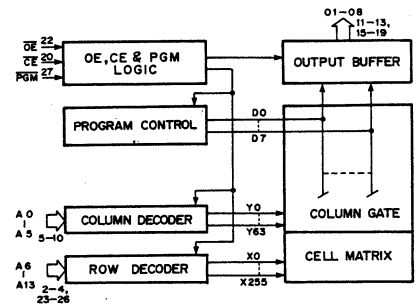

MODE \ TERMINAL	DATA OUTPUT	$\overline{CE}$	$\overline{OE}$	$\overline{PGM}$	VPP
READ	DATA OUT	0	0	1	+5V
OUTPUT DISABLE	HIGH IMPEDANCE	0	1	1	+5V
OUTPUT DISABLE	HIGH IMPEDANCE	0	0	0	+5V
STANDBY	HIGH IMPEDANCE	1	X	X	+5V
PROGRAM	DATA IN	0	1	0	+21V
PROGRAM VERIFY	DATA OUT	0	0	1	+21V
PROGRAM INHIBIT	HIGH IMPEDANCE	1	X	X	+21V

0:LOW LEVEL
1:HIGH LEVEL
X:DON'T CARE

MC10198L (MOTOROLA)

ECL RETRIGGERABLE MONOSTABLE MULTIVIBRATOR

– TOP VIEW –

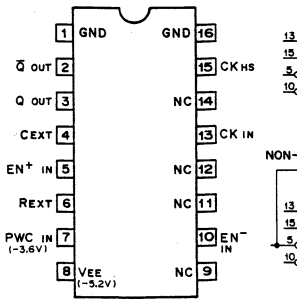

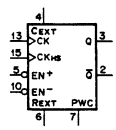

NON-RETRIGGERABLE MMV

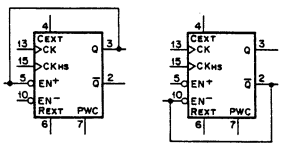

CK : CLOCK TRIGGER INPUT

CKHS: HIGH-SPEED CLOCK TRIGGER INPUT

EN+ : TRIGGER POSITIVE ENABLE

EN− : TRIGGER NEGATIVE ENABLE

PWC : EXTERNAL PULSE WIDTH CONTROL

OUTPUT PULSE WIDTH : PWQ

PWQ = 1.19 · CEXT (REXT +284)

WHERE

PWQ = SEC

CEXT = FARADS

REXT = OHMS

VEE = −5.2V

PWC = −3.6V

NOTE ; · SELECT REXT RANGING FROM ZERO TO 16K OHMS.

· SELECT CEXT GREATER THAN 20PF.

FUNCTION TABLE

EN+	EN−	TRIG. SLOPE
0	0	⌐¬
0	1	⌐¬
1	0	⌐¬
1	1	DISABLE

0; LOW LEVEL
1; HIGH LEVEL

MC10H113M (MOTOROLA) FLAT PACKAGE

ECL EXCLUSIVE OR GATE

– TOP VIEW –

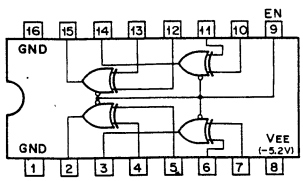

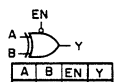

A	B	EN	Y
0	0	0	0
0	1	0	1
1	0	0	1
1	1	0	0
X	X	1	0

0; LOW LEVEL
1; HIGH LEVEL
X; DON'T CARE

MC10H116M (MOTOROLA) FLAT PACKAGE

ECL DIFFERENTIAL OR/NOR LINE RECEIVER

– TOP VIEW –

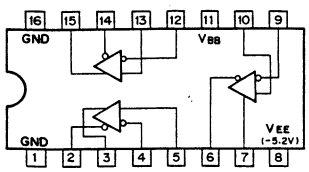

MC10H124M (MOTOROLA) FLAT PACKAGE

ECL TTL-TO-ECL TRANSLATOR

– TOP VIEW –

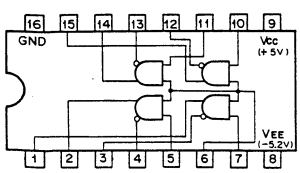

MC10H125M (MOTOROLA) FLAT PACKAGE

ECL ECL-TO-TTL TRANSLATOR

– TOP VIEW –

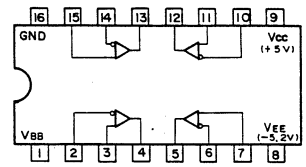

MC10H131M (MOTOROLA) FLAT PACKAGE

ECL D-TYPE FLIP FLOP

– TOP VIEW –

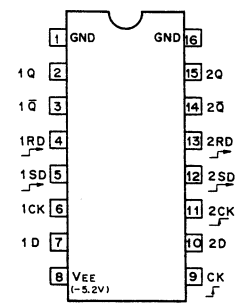

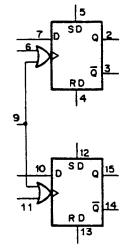

INPUTS				OUTPUTS	
SD	RD	CK	D	Qn+1	Q̄n+1
1	0	X	X	1	0
0	1	X	X	0	1
1	1	X	X	ND	ND
0	0	⌐¬	1	1	0
0	0	⌐¬	0	0	1
0	0	0	X	Qn	Q̄n

0; LOW LEVEL
1; HIGH LEVEL
X; DON'T CARE
ND; NOT DEFINED

MC14001BCP (MOTOROLA)
MC14001BF (MOTOROLA) FLAT PACKAGE

C-MOS 2-INPUT NOR GATE

– TOP VIEW –

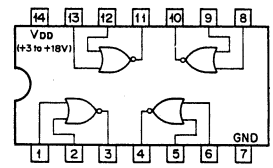

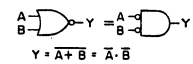

A	B	Y
0	0	1
0	1	0
1	0	0
1	1	0

0; LOW LEVEL
1; HIGH LEVEL

MC14011BCP (MOTOROLA)
MC14011BF (MOTOROLA) FLAT PACKAGE

C-MOS 2-INPUT NAND GATE

– TOP VIEW –

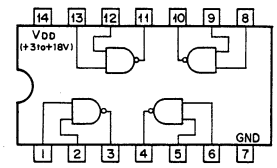

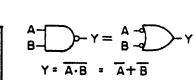

A	B	Y
0	0	1
0	1	1
1	0	1
1	1	0

0:LOW LEVEL
1:HIGH LEVEL

MC14013BF (MOTOROLA) FLAT PACKAGE

C-MOS D-TYPE FLIP-FLOP WITH DIRECT SET/RESET

– TOP VIEW –

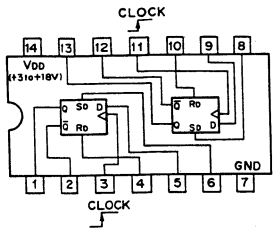

DIRECT R-S FLIP FLOP			
Sp	Rp	Q	$\overline{Q}$
0	0	Qn	$\overline{Qn}$
0	1	0	1
1	0	1	0
1	1	1	1

D-TYPE FLIP FLOP	
CKn	CKn+1
D	Q
0	0
1	1

CLOCK CK: ⌐¬

0; LOW LEVEL
1; HIGH LEVEL

CKn; BEFORE CLOCK
CKn+1; AFTER CLOCK

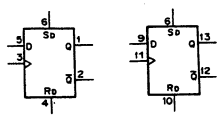

MC14016BCP (MOTOROLA)
MC14016BF (MOTOROLA) FLAT PACKAGE
TC4016BPHB (TOSHIBA)
MC14066BF (MOTOROLA) FLAT PACKAGE

C-MOS BILATERAL ANALOG SWITCH

– TOP VIEW –

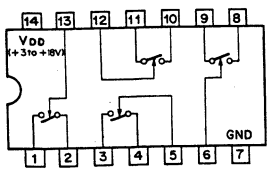

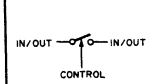

CONTROL	SWITCH
0	OFF
1	ON

0; LOW LEVEL
1; HIGH LEVEL

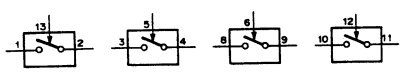

MC14023BF (MOTOROLA) FLAT PACKAGE

C-MOS 3-INPUT NAND GATE

– TOP VIEW –

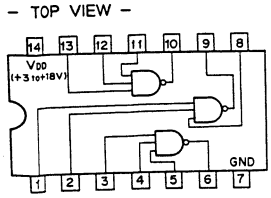

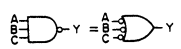

A	B	C	Y
X	X	0	1
X	0	X	1
0	X	X	1
1	1	1	0

0; LOW LEVEL
1; HIGH LEVEL
X; DON'T CARE

MC14024BF (MOTOROLA) FLAT PACKAGE

C-MOS ASYNCHRONOUS 7-BIT BINARY COUNTER

– TOP VIEW –

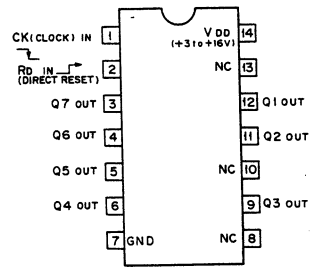

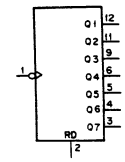

COUNT	INPUTS		OUTPUTS							
	CK	Rp	Q7	Q6	Q5	Q4	Q3	Q2	Q1	
0	X	1	0	0	0	0	0	0	0	
1	↓	0	0	0	0	0	0	0	1	
2	↓	0	0	0	0	0	0	1	0	
3	↓	0	0	0	0	0	0	1	1	
4	↓	0	0	0	0	0	1	0	0	
125	↓	0	1	1	1	1	1	0	1	
126	↓	0	1	1	1	1	1	1	0	
127	↓	0	1	1	1	1	1	1	1	
—	0	0	NO CHANGE							
—	1	0								

0; LOW LEVEL
1; HIGH LEVEL
X; DON'T CARE

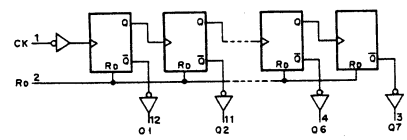

MC14028BF (MOTOROLA) FLAT PACKAGE

C-MOS BCD TO DECIMAL DECODER

– TOP VIEW –

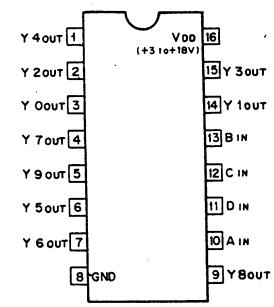

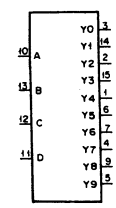

STATE	INPUTS				OUTPUTS									
	D	C	B	A	Y0	Y1	Y2	Y3	Y4	Y5	Y6	Y7	Y8	Y9
0	0	0	0	0	1	0	0	0	0	0	0	0	0	0
1	0	0	0	1	0	1	0	0	0	0	0	0	0	0
2	0	0	1	0	0	0	1	0	0	0	0	0	0	0
3	0	0	1	1	0	0	0	1	0	0	0	0	0	0
4	0	1	0	0	0	0	0	0	1	0	0	0	0	0
5	0	1	0	1	0	0	0	0	0	1	0	0	0	0
6	0	1	1	0	0	0	0	0	0	0	1	0	0	0
7	0	1	1	1	0	0	0	0	0	0	0	1	0	0
8	1	0	0	0	0	0	0	0	0	0	0	0	1	0
9	1	0	0	1	0	0	0	0	0	0	0	0	0	1
10	1	0	1	0	0	0	0	0	0	0	0	0	0	0
11	1	0	1	1	0	0	0	0	0	0	0	0	0	0
12	1	1	0	0	0	0	0	0	0	0	0	0	0	0
13	1	1	0	1	0	0	0	0	0	0	0	0	0	0
14	1	1	1	0	0	0	0	0	0	0	0	0	0	0
15	1	1	1	1	0	0	0	0	0	0	0	0	0	0

0 ; LOW LEVEL
1 ; HIGH LEVEL

MC14046BCP (MOTOROLA)
MC14046BF (MOTOROLA) FLAT PACKAGE

C-MOS PHASE LOCKED LOOP
– TOP VIEW –

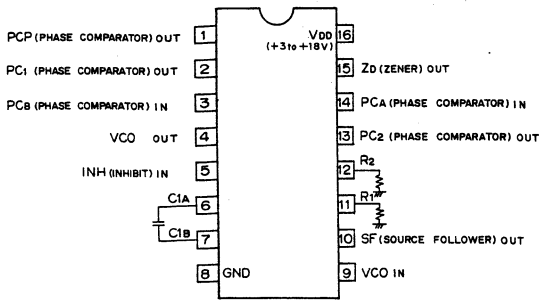

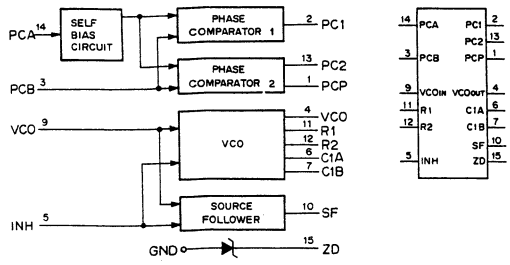

MC14053BCP (MOTOROLA)
MC14053BF (MOTOROLA) FLAT PACKAGE
TC4053BFHB (TOSHIBA) FLAT PACKAGE

C-MOS TRIPLE 2-CHANNEL ANALOG MULTIPLEXER/DEMULTIPLEXER
– TOP VIEW –

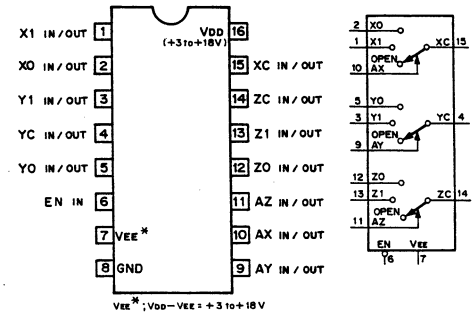

CONT. INPUTS		ON
EN	A (X,Y,Z)	CHANNEL
0	0	0
0	1	1
1	X	OPEN

0; LOW LEVEL
1; HIGH LEVEL
X; DON'T CARE.

MC14069UBCP (MOTOROLA)
MC14069UBF (MOTOROLA)

C-MOS INVERTER
– TOP VIEW –

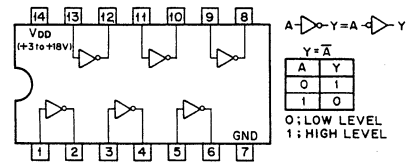

A	Y
0	1
1	0

0; LOW LEVEL
1; HIGH LEVEL

MC14050BCP (MOTOROLA)
TC4050BF (TOSHIBA) FLAT PACKAGE

C-MOS NON-INVERTING TYPE BUFFER/CONVERTER
– TOP VIEW –

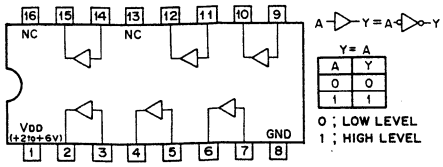

Y = A	
A	Y
0	0
1	1

0 ; LOW LEVEL
1 ; HIGH LEVEL

MC14070BCP (MOTOROLA)
MC14070BF (MOTOROLA) FLAT PACKAGE

C-MOS EXCLUSIVE OR GATE
– TOP VIEW –

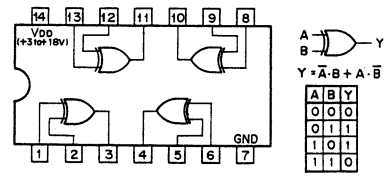

A	B	Y
0	0	0
0	1	1
1	0	1
1	1	0

0; LOW LEVEL
1; HIGH LEVEL

MC14052BF (MOTOROLA) FLAT PACKAGE

C-MOS DUAL 4-CHANNEL ANALOG MULTIPLEXER/DEMULTIPLEXER
– TOP VIEW –

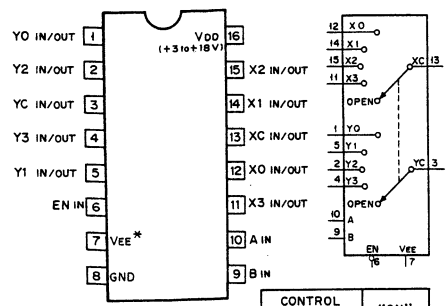

CONTROL INPUTS			"ON" CHANNEL
EN	B	A	
0	0	0	0
0	0	1	1
0	1	0	2
0	1	1	3
1	X	X	OPEN

0; LOW LEVEL
1; HIGH LEVEL
X; DON'T CARE.

MC14071BCP (MOTOROLA)
MC14071BF (MOTOROLA) FLAT PACKAGE

C-MOS 2-INPUT OR GATE
– TOP VIEW –

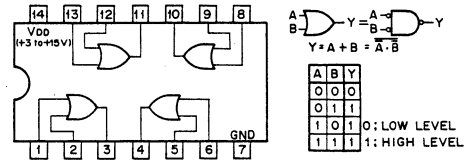

A	B	Y
0	0	0
0	1	1
1	0	1
1	1	1

0; LOW LEVEL
1; HIGH LEVEL

MC14075BF (MOTOROLA)

C-MOS 3-INPUT OR GATE

– TOP VIEW –

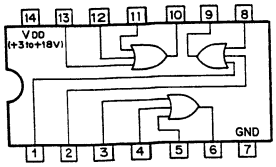

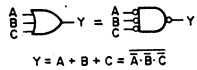

C	B	A	Y
0	0	0	0
X	X	1	1
X	1	X	1
1	X	X	1

0 ; LOW LEVEL
1 ; HIGH LEVEL
X ; DON'T CARE

MC14557BF (MOTOROLA) FLAT PACKAGE

C-MOS 1-TO-64-BIT VARIABLE LENGTH SHIFT REGISTER

– TOP VIEW –

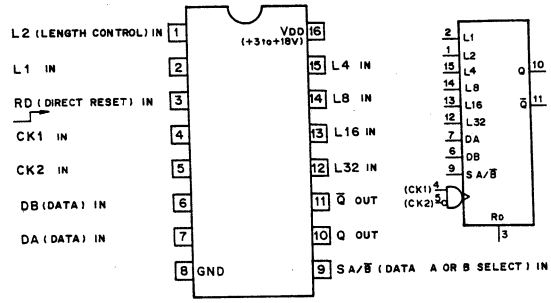

LENGTH SELECT TRUTH TABLE

L32	L16	L8	L4	L2	L1	REGISTER LENGTH
0	0	0	0	0	0	1 - BIT
0	0	0	0	0	1	2 - BIT
0	0	0	0	1	0	3 - BIT
0	0	0	0	1	1	4 - BIT
0	0	0	1	0	0	5 - BIT
1	1	1	1	0	0	61 - BIT
1	1	1	1	0	1	62 - BIT
1	1	1	1	1	0	63 - BIT
1	1	1	1	1	1	64 - BIT

INPUTS				OUTPUT
RD	SA/B	CK1	CK2	Q
0	0	↓	0	DB
0	1	↓	0	DA
0	0	1	↓	DB
0	1	1	↓	DA
1	X	X	X	0

0 ; LOW LEVEL
1 ; HIGH LEVEL
X ; DON'T CARE

MC14081BF (MOTOROLA) FLAT PACKAGE

C-MOS 2-INPUT AND GATE

– TOP VIEW –

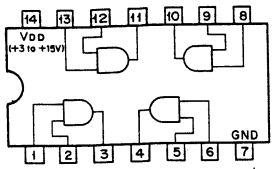

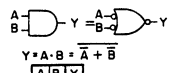

A	B	Y
0	0	0
0	1	0
1	0	0
1	1	1

0:LOW LEVEL
1:HIGH LEVEL

MC14584BF (MOTOROLA)

C-MOS SCHMITT TRIGGER INVERTER

– TOP VIEW –

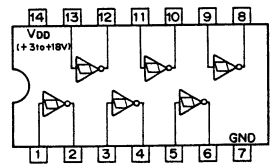

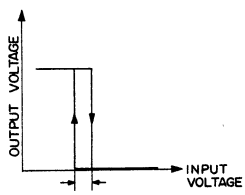

0.4V (V_{DD}=5V)
0.45V(V_{DD}=10V)
0.90V(V_{DD}=15V)

MC14538BCP (MOTOROLA)

MC14538BF (MOTOROLA) FLAT PACKAGE

C-MOS DUAL RETRIGGERABLE MONOSTABLE MULTIVIBRATOR

– TOP VIEW –

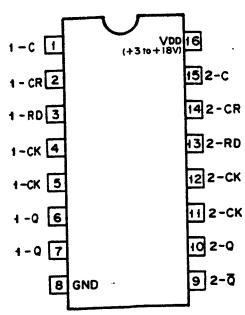

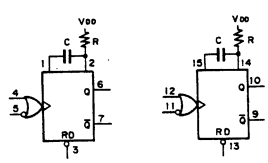

OUTPUT PULSE WIDTH = C·R

MC34051P (MOTOROLA)

RS-422 DRIVER/RECEIVER

– TOP VIEW –

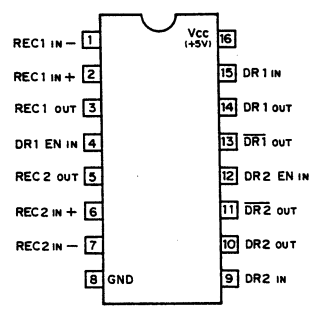

DR EN	MODE
0	DISABLE
1	ENABLE

0 ; LOW LEVEL
1 ; HIGH LEVEL

DR ; DRIVER
DR EN ; DRIVER ENABLE
REC ; RECEIVER

RETRIGGERABLE M.M.V

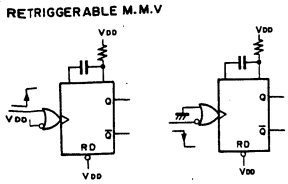

NON-RETRIGGERABLE M.M.V

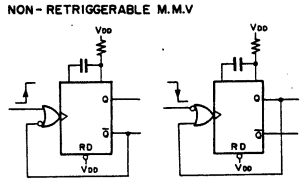

DRIVER CIRCUIT

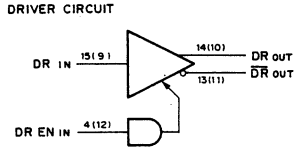

RECEIVER CIRCUIT

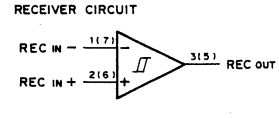

MC34182M (MOTOROLA) FLAT PACKAGE

JFET INPUT OPERATIONAL AMPLIFIER

– TOP VIEW –

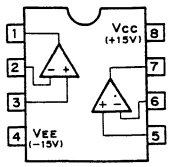

MC34184M (MOTOROLA) FLAT PACKAGE

JFET INPUT OPERATIONAL AMPLIFIER

– TOP VIEW –

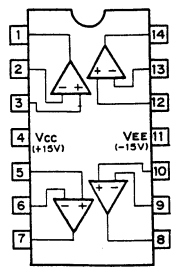

MC74HC11F (MOTOROLA) FLAT PACKAGE

SN74HC11N (TI)

C-MOS 3-INPUT POSITIVE-AND GATE

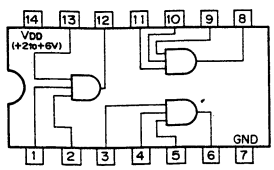

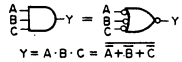

$Y = A \cdot B \cdot C = \overline{\overline{A}+\overline{B}+\overline{C}}$

A	B	C	Y
0	0	0	0
0	0	1	0
0	1	0	0
0	1	1	0
1	0	0	0
1	0	1	0
1	1	0	0
1	1	1	1

0 ; LOW LEVEL
1 ; HIGH LEVEL

MC74HC58N (MOTOROLA)

C-MOS 2-WIDE 2-INPUT/3-INPUT AND-OR GATE

– TOP VIEW –

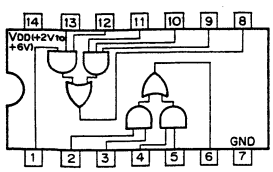

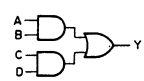

$Y = A \cdot B + C \cdot D$

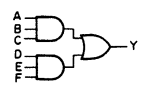

$Y = A \cdot B \cdot C + D \cdot E \cdot F$

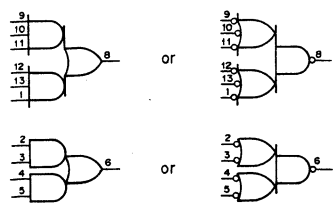

MC74HC595N (MOTOROLA)

C-MOS 8-BIT SERIAL-INPUT/SERIAL- OR PARALLEL-OUTPUT SHIFT REGISTER WITH LATCHED 3-STATE OUTPUT

– TOP VIEW –

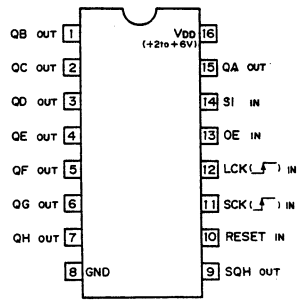

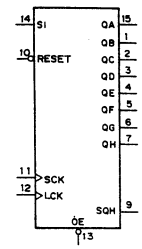

OE ; OUTPUT ENABLE INPUT
LCK ; LATCH CLOCK INPUT
SCK ; SHIFT CLOCK INPUT
RESET ; SHIFT-REGISTER RESET INPUT
SI ; SERIAL IN
QA–QH ; PARALLEL OUTPUTS
SQH ; SERIAL OUT

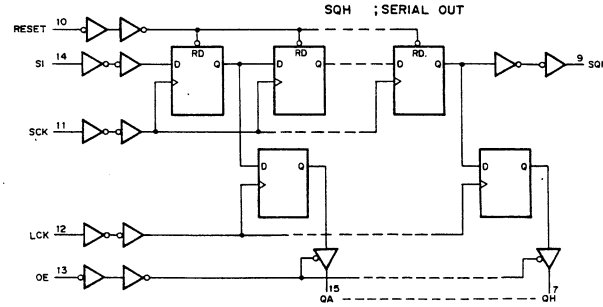

MC74HC597N (MOTOROLA)

CMOS 8-BIT LATCH/SHIFT REGISTER

– TOP VIEW –

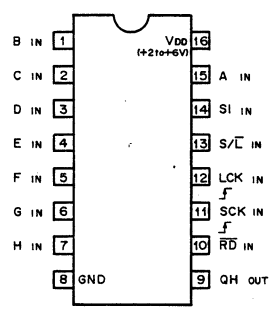

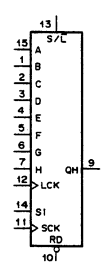

SI ; SERIAL DATA INPUT
S/L ; SERIAL SHIFT/PARALLEL LOAD INPUT
LCK ; LATCH CLOCK INPUT
SCK ; SHIFT CLOCK INPUT
RD ; RESET INPUT
A–H ; PARALLEL DATA INPUTS

INPUTS						OUTPUT
RD	LD	LCK	SCK	SI	A–H	QH
0	X	X	X	X	X	0
1	1	↑	0,1,↓	X	a–h	NO CHANGE
1	0	↑	X	X	a–h	h
1	1	X	↓	X	X	QGn

0 ; LOW LEVEL
1 ; HIGH LEVEL
X ; DON'T CARE
a–h ; DATA AT INPUTS A–H, RESPECTIVELY

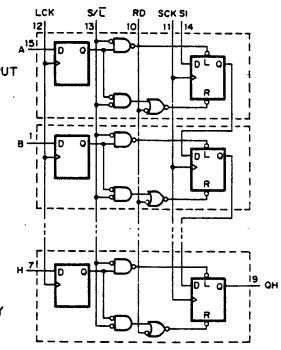

MSL917RS (OKI)

VACUUM FLUORESCENT DISPLAY DRIVER
– TOP VIEW –

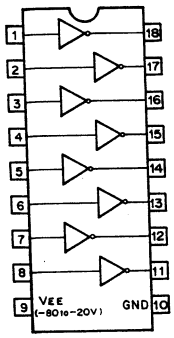

MSM5204ARS (OKI)

C-MOS 8 BIT ANALOG TO DIGITAL CONVERTER
– TOP VIEW –

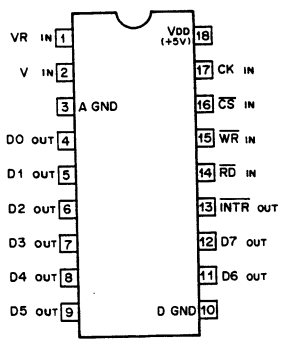

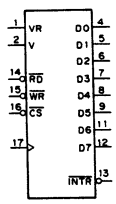

A GND ; ANALOG GND
CK ; CLOCK INPUT
CS ; CHIP SELECT INPUT
DO–D7 ; DATA OUTPUTS
D GND ; DIGITAL GND
INTR ; INTERRVPT OUTPUT
RD ; READ INPUT
V ; ANALOG VOLTAGE INPUT
VR ; VOLTAGE REFERENCE INPUT
WR ; WRITE INPUT

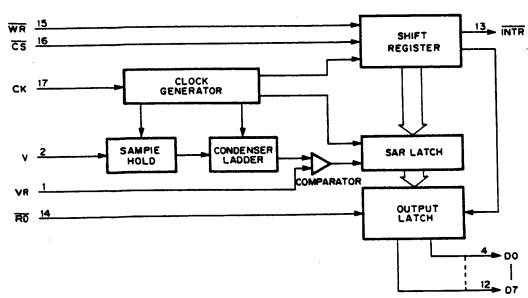

NE5532P (TI)

LOW NOISE OPERATIONAL AMPLIFIER
- TOP VIEW -

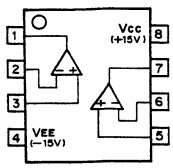

NJM082M (JRC) FLAT PACKAGE

OPERATIONAL AMPLIFIER
(J FET-INPUT)
- TOP VIEW -

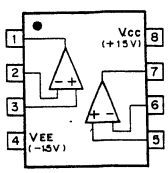

NJM4558D-D (JRC)
NJM4558D-FA (JRC)
RC4558DQ (RAYTHEON)
RC4558M (RAYTHEON) FLAT PACKAGE
uPC4558C (NEC)

OPERATIONAL AMPLIFIER
- TOP VIEW -

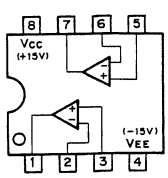

NJM78L05A (JRC)
RC78L05A (RAYTHEON)
RC78L08A (RAYTHEON)
RC78L09A (RAYTHEON)
TA78L005AP (TOSHIBA)

POSITIVE VOLTAGE REGULATOR (100mA)

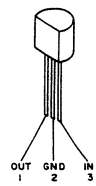

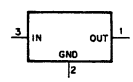

OUTPUT VOLTAGE	AN78L??	NJM78L??A	RC78L??A	TA78L???AP
+2.6V	-------	NJM78L02A	RC78L02A	----------
+4V	AN78L04	---------	--------	----------
+5V	AN78L05	NJM78L05A	RC78L05A	TA78L005AP
+6V	AN78L06	NJM78L06A	RC78L06A	TA78L006AP
+6.2V	-------	---------	--------	----------
+7V	AN78L07	---------	--------	TA78L007AP
+7.5V	-------	---------	--------	TA78L075AP
+8V	AN78L08	NJM78L08A	RC78L08A	TA78L008AP
+8.2V	-------	---------	--------	----------
+9V	AN78L09	NJM78L09A	RC78L09A	TA78L009AP
+10V	AN78L10	---------	--------	TA78L010AP
+12V	AN78L12	NJM78L12A	RC78L12A	TA78L012AP
+13.2V	-------	---------	--------	TA78L132AP
+15V	AN78L15	NJM78L15A	RC78L15A	TA78L015AP
+18V	AN78L18	NJM78L18A	RC78L18A	TA78L018AP
+20V	AN78L20	NJM78L20A	RC78L20A	TA78L020AP
+24V	AN78L24	NJM78L24A	RC78L24A	TA78L024AP

OUTPUT VOLTAGE	uA78L??ACL	uA78L??AWV	uPC78L??J
+2.6V	uA78L02ACL	uA78L26AWV	----------
+4V	----------	----------	----------
+5V	uA78L05ACL	uA78L05AWV	uPC78L05J
+6V	----------	----------	----------
+6.2V	uA78L06ACL	uA78L62AWV	----------
+7V	----------	----------	----------
+7.5V	----------	----------	----------
+8V	uA78L08ACL	----------	uPC78L08J
+8.2V	----------	uA78L82AWV	----------
+9V	uA78L09ACL	uA78L09AWV	----------
+10V	uA78L10ACL	----------	uPC78L10J
+12V	uA78L12ACL	uA78L12AWV	uPC78L12J
+13.2V	----------	----------	----------
+15V	uA78L15ACL	uA78L15AWV	uPC78L15J
+18V	----------	uA78L18AWV	----------
+20V	----------	----------	----------
+24V	----------	uA78L24AWV	----------

PA0009 (PIONEER)

SIGNAL SEPARATOR
- TOP VIEW -

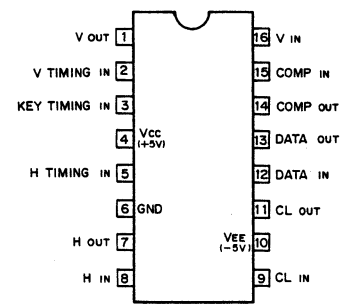

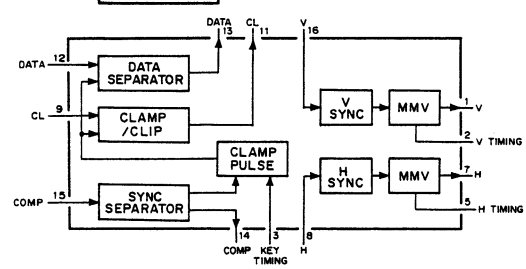

RC1496M (RAYTHEON) FLAT PACKAGE
BALANCED MODULATOR/DEMODULATOR
– TOP VIEW –

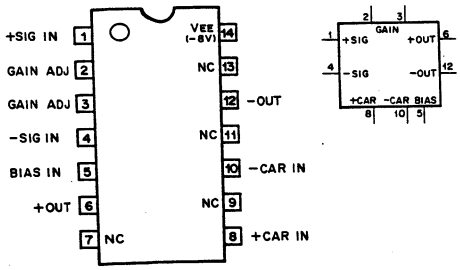

RC4560M (RAYTHEON) FLAT PACKAGE
uPC4560G2 (NEC) FLAT PACKAGE
OPERATIONAL AMPLIFIER
– TOP VIEW –

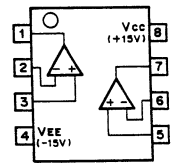

RC4562DD (RAYTHEON)
OPERATIONAL AMPLIFIER
– TOP VIEW –

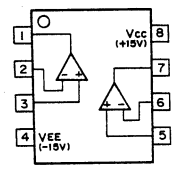

RC2041MD (RAYTHEON) FLAT PACKAGE
OPERATIONAL AMPLIFIER
– TOP VIEW –

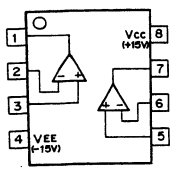

RC5532M (RAYTHEON) FLAT PACKAGE
OPERATIONAL AMPLIFIER
– TOP VIEW –

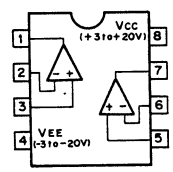

RC2043MD (RAYTHEON) FLAT PACKAGE
OPERATIONAL AMPLIFIER
– TOP VIEW –

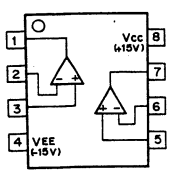

RC4556D (RAYTHEON)
OPERATIONAL AMPLIFIER
– TOP VIEW –

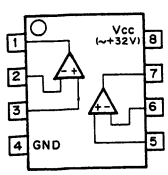

RC78M05FA (RAYTHEON)
RC78M09FA (RAYTHEON)
RC7805FA (RAYTHEON)
RC7808FA (RAYTHEON)
RC7809FA (RAYTHEON)
POSITIVE VOLTAGE REGULATOR
– FRONT VIEW –

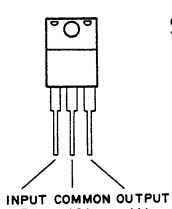

OUTPUT VOLTAGE	NJM78M??FA	NJM78??FA	RC78M??FA	RC78??FA
+5V	NJM78M05FA	NJM7805FA	RC78M05FA	RC7805FA
+6V	NJM78M06FA	NJM7806FA	RC78M06FA	RC7806FA
+8V	NJM78M08FA	NJM7808FA	---------	RC7808FA
+9V	NJM78M09FA	NJM7809FA	RC78M09FA	RC7809FA
+12V	NJM78M12FA	NJM7812FA	RC78M12FA	RC7812FA
+15V	NJM78M15FA	NJM7815FA	RC78M15FA	RC7815FA
+18V	NJM78M18FA	NJM7818FA	---------	RC7818FA
+20V	NJM78M20FA	NJM7820FA	---------	RC7820FA
+24V	NJM78M24FA	NJM7824FA	---------	RC7824FA

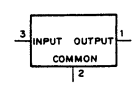

RC79L05A (RAYTHEON)
RC79L08A (RAYTHEON)

NEGATIVE VOLTAGE REGULATOR (100mA)

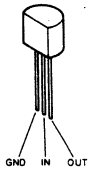

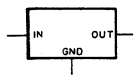

OUTPUT VOLTAGE	NJM79L??A	RC79L??A	AN79L??	MC79L??ACP
-3V	NJM79L03A	RC79L03A	-------	----------
-4V	---------	--------	AN79L04	----------
-5V	NJM79L05A	RC79L05A	AN79L05	MC79L05ACP
-6V	NJM79L06A	RC79L06A	AN79L06	----------
-7V	---------	--------	AN79L07	----------
-8V	NJM79L08A	RC79L08A	AN79L08	----------
-9V	NJM79L09A	RC79L09A	AN79L09	----------
-10V	---------	--------	AN79L10	----------
-12V	NJM79L12A	RC79L12A	AN79L12	MC79L12ACP
-15V	NJM79L15A	RC79L15A	AN79L15	MC79L15ACP
-18V	NJM79L18A	RC79L18A	AN79L18	MC79L18ACP
-20V	---------	--------	AN79L20	----------
-24V	NJM79L24A	RC79L24A	AN79L24	MC79L24ACP

RC79M05FA (RAYTHEON)

NEGATIVE VOLTAGE REGULATOR
- FRONT VIEW -

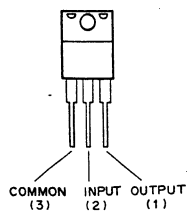

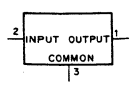

	NJM79M ? ?FA 1A	NJM79 ? ?FA 2.2A	RC79M ? ?FA 1A	RC79 ? ?FA 2.2A
-5V	NJM79M05FA	NJM7905FA	RC79M05FA	RC7905FA
-6V	NJM79M06FA	NJM7906FA	RC79M06FA	------
-8V	NJM79M08FA	NJM7908FA	RC79M08FA	------
-9V	NJM79M09FA	NJM7909FA	RC79M09FA	RC7909FA
-12V	NJM79M12FA	NJM7912FA	RC79M12FA	RC7912FA
-15V	NJM79M15FA	NJM7915FA	RC79M15FA	RC7915FA
-18V	NJM79M18FA	NJM7918FA	RC79M18FA	RC7918FA
-24V	NJM79M24FA	NJM7924FA	RC79M24FA	------

S-80230AG (SEIKO I AND E)
S-81230AG (SEIKO I AND E)

C-MOS VOLTAGE REGULATOR

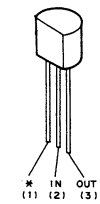

* S-802PP → VDD
S-812PP → VSS

OUTPUT VOLTAGE	S-802PP S-812PP
-3V	S-80230AG
-5V	S-80250AG
+3V	S-81230AG
+5V	S-81250AG
+5V	S-81250HG

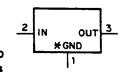

S-8053ALR (SEIKO I AND E)

VOLTAGE DETECTOR

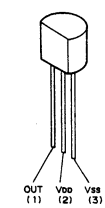

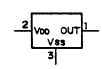

DETECTION RANGE (V)	S-805??
1.00 - 1.10	S-8051 ANB
1.10 - 1.20	S-8051 ANR
2.00 - 2.20	S-8052 ALB
2.20 - 2.40	S-8052 ALR
2.40 - 2.60	S-8052 ALO
2.60 - 2.80	S-8052 ALY
2.80 - 3.10	S-8053 ALB
2.90 - 3.10	S-8053 HLB
3.10 - 3.40	S-8053 ALR
3.25 - 3.405	S-8053 ALR-U
3.80 - 4.20	S-8054 HN
4.00 - 4.30	S-8054 ALB
4.30 - 4.60	S-8054 ALR
4.60 - 4.90	S-8054 ALO
4.90 - 5.20	S-8054 ALY

SBX1596-01 (SONY)

32LINE MEMORY FOR TBC

– TOP VIEW –

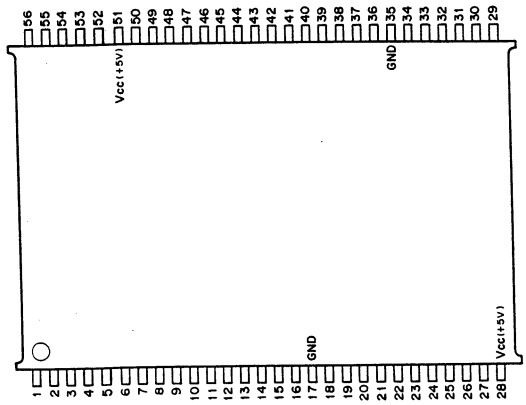

(Vcc = + 5V)

PIN NO.	I/O	SYMBOL	PIN NO.	I/O	SYMBOL	PIN NO.	I/O	SYMBOL
1	O	BD20	20	O	RD26	39	I	MA211
2	O	BD21	21	O	RD27	40	I	MA210
3	O	BD22	22	O	BD27	41	I	MA29
4	O	BD23	23	O	BD26	42	I	MA28
5	O	RD23	24	O	BD25	43	I	MA27
6	O	RD22	25	O	BD24	44	I	MA26
7	O	RD21	26	I/O	DOB	45	I	MA25
8	O	RD20	27	I/O	DORY	46	I	MA24
9	I	WCK	28	–	Vcc	47	I	MA23
10	I	NWCK	29	I	WD23	48	I	MA22
11	I	DO	30	I	WD22	49	I	MA21
12	I	RSUB	31	I	WD21	50	I	MA20
13	I	RCK	32	I	WD20	51	–	Vcc
14	I	NRCK	33	I/O	DOBY1	52	I	WE
15	I	CLR	34	I/O	DOBY2	53	I	WD24
16	I	RMAI	35	–	GND	54	I	WD25
17	–	GND	36	I	MOD1	55	I	WD26
18	O	RD24	37	I	MOD2	56	I	WD27
19	O	RD25	38	I	MA212			

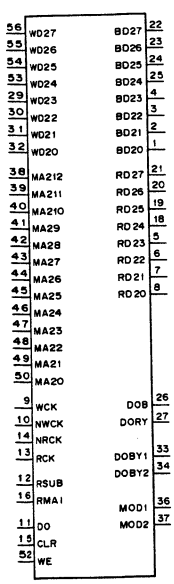

INPUT

RCK	; READ CLOCK
WCK	; WRITE CLOCK
CLR	; CHROMA READ ZERO
DO	; DROPOUT WRITE CLOCK
MA20-MA29 MA210-MA212	; MEMORY ADDRESS
MOD1	; SYSTEM SELECT (H : NTSC, L : PAL)
MOD2	; FORMAT SELECT (H : U-MATIC, L : BETACAM)
NRCK	; 1/8 RCK
NWCK	; 1/8 WCK
RMAI	; CHROMA READ CLOCK
RSUB	; DROPOUT READ CLOCK
WD20-WD27	; SERIAL DATA

OUTPUT

BD20-BD27	; B-Y DATA
RD20-RD27	; R-Y DATA

INPUT/OUTPUT

DOB	; DROPOUT DETECT
DOBY1,DOBY2	; R-Y DROPOUT DETECT
DORY	; R-Y DROPOUT DETECT

INPUTS				OUTPUTS										
MOD 1	MOD 2	CLR	DO	RD20 BD20	RD21 BD21	RD22 BD22	RD23 BD23	RD24 BD24	RD25 BD25	RD26 BD26	RD27 BD27	DOB	DORY	DOBY
0	0	0	0	0	0	0	0	0	0	0	0	0	0	0
0	0	0	1	1	1	1	1	1	1	1	1	1	1	1
0	0	1	0	1	1	1	1	1	1	1	1	0	0	0
0	0	1	1	1	1	1	1	1	1	1	1	1	1	1
1	1	1	1	1	1	1	1	1	1	1	1	1	1	1
1	1	1	0	1	1	1	1	1	1	1	1	1	1	1
1	1	0	1	1	1	1	1	1	1	1	1	1	1	1
1	1	0	0	1	1	1	1	1	1	1	1	1	1	1

0 ; LOW LEVEL
1 ; HIGH LEVEL

SBX4002-01 (NEC)

CLAMP AND BUFFER

– PRINTED SIDE VIEW –

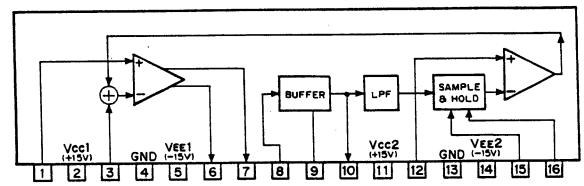

SN16913P (TI)

BALANCED MIXER

– TOP VIEW –

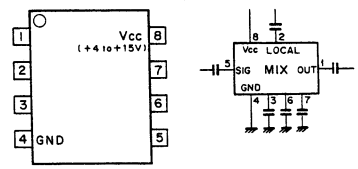

SN74265N (TI)

TTL COMPLEMENTARY-OUTPUT ELEMENT

– TOP VIEW –

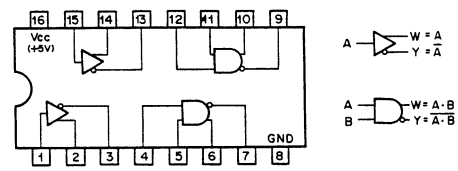

SN74HC00N (TI)

SN74HC00NS (TI) FLAT PACKAGE

C-MOS QUAD 2-INPUT NAND GATE

– TOP VIEW –

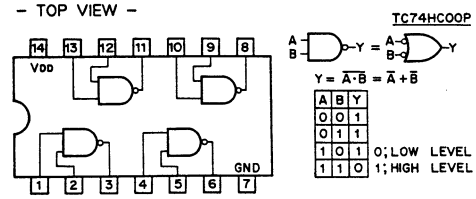

TYPE	Vdd
TC74AC00P	+2 to +5.5V
MC74HCT00N 74ACT00PC	+5V
OTHER TYPES	+2 to +6V

SN74HC02N (TI)

C-MOS QUAD 2-INPUT NOR GATE

– TOP VIEW –

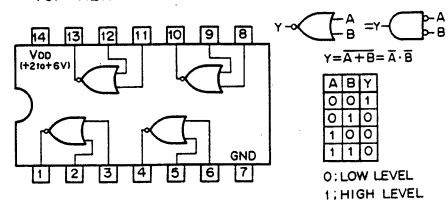

SN74HC04N (TI)
SN74HC04NS (TI) FLAT PACKAGE
SN74HCU04N (TI)
SN74HCU04NS (TI) FLAT PACKAGE

C-MOS HEX INVERTER
– TOP VIEW –

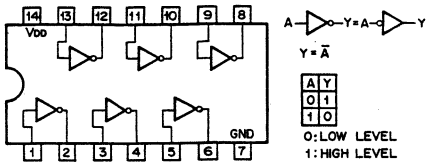

A	Y
0	1
1	0

0: LOW LEVEL
1: HIGH LEVEL

NOTE :

TYPE	VDD
74ACT04 TYPES 74HCT04 TYPES	+5V
OTHER TYPES	+2V to +6V

SN74HC05NS (TI) FLAT PACKAGE

C-MOS HEX INVERTER WITH OPEN-DRAIN
– TOP VIEW –

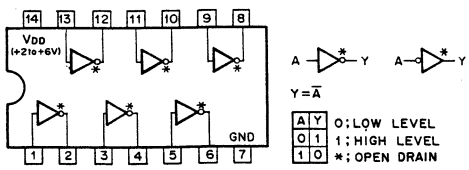

A	Y
0	1
1	0

0; LOW LEVEL
1; HIGH LEVEL
*; OPEN DRAIN

SN74HC08N (TI)
SN74HC08NS (TI) FLAT PACKAGE

C-MOS QUAD 2-INPUT AND GATE
– TOP VIEW –

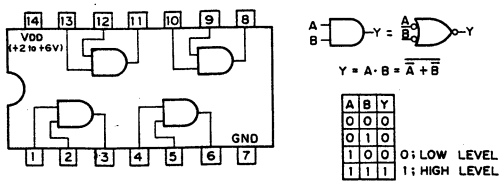

A	B	Y
0	0	0
0	1	0
1	0	0
1	1	1

0; LOW LEVEL
1; HIGH LEVEL

SN74HC138N (TI) (V_{DD} = + 2 to + 6V)
SN74HC138NS (TI) (V_{DD} = + 2 to + 6V) FLAT PACKAGE

C-MOS 3-TO-8 LINE DECODER/DEMULTIPLEXER
– TOP VIEW –

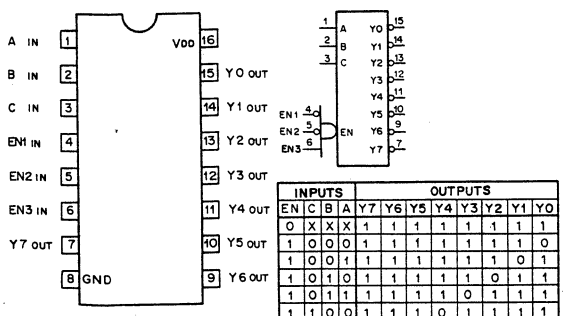

INPUTS				OUTPUTS							
EN	C	B	A	Y7	Y6	Y5	Y4	Y3	Y2	Y1	Y0
0	X	X	X	1	1	1	1	1	1	1	1
1	0	0	0	1	1	1	1	1	1	1	0
1	0	0	1	1	1	1	1	1	1	0	1
1	0	1	0	1	1	1	1	1	0	1	1
1	0	1	1	1	1	1	1	0	1	1	1
1	1	0	0	1	1	1	0	1	1	1	1
1	1	0	1	1	1	0	1	1	1	1	1
1	1	1	0	1	0	1	1	1	1	1	1
1	1	1	1	0	1	1	1	1	1	1	1

EN = $\overline{EN1} \cdot \overline{EN2} \cdot EN3$

0; LOW LEVEL
1; HIGH LEVEL
X; DON'T CARE

SN74HC139N (TI) (V_{DD} = + 2 to + 6V)
SN74HC139NS (TI) (V_{DD} = + 2 to + 6V) FLAT PACKAGE

C-MOS 1-OF-4 DECODER/DEMULTIPLEXER
– TOP VIEW –

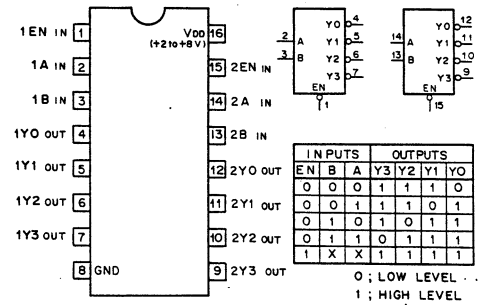

INPUTS			OUTPUTS			
EN	B	A	Y3	Y2	Y1	Y0
0	0	0	1	1	1	0
0	0	1	1	1	0	1
0	1	0	1	0	1	1
0	1	1	0	1	1	1
1	X	X	1	1	1	1

0 ; LOW LEVEL
1 ; HIGH LEVEL
X ; DON'T CARE

SN74HC14N (TI)
SN74HC14NS (TI) FLAT PACKAGE

C-MOS SCHMITT TRIGGER INVERTER
– TOP VIEW –

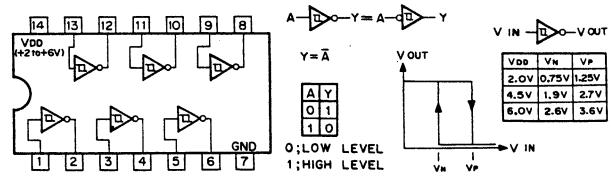

A	Y
0	1
1	0

0; LOW LEVEL
1; HIGH LEVEL

VDD	VN	VP
2.0V	0.75V	1.25V
4.5V	1.9V	2.7V
6.0V	2.6V	3.6V

SN74HC157N (TI)
SN74HC157NS (TI) FLAT PACKAGE

C-MOS QUAD 2-LINE-TO-1-LINE DATA SELECTOR/MULTIPLEXER
– TOP VIEW –

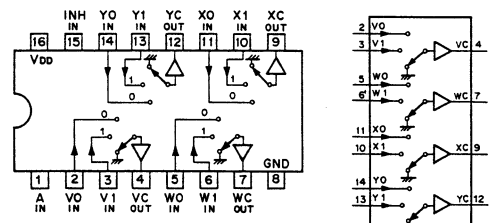

TYPE	VDD
EXCEPT FOL. TYPE	+2 to +6V
74ACT157PC 74ACT157SJ	+5V
TC74AC157P	+2 to +5.5V

CONT. IN		ON CHANNEL
INH	A	
0	0	0
0	1	1
1	X	GND

0; LOW LEVEL
1; HIGH LEVEL
X; DON'T CARE

SN74HC161NS (TI) (V_{DD} = +2 to +6V) FLAT PACKAGE

C-MOS SYNCHRONOUS PRESETTABLE 4-BIT BINARY COUNTER
– TOP VIEW –

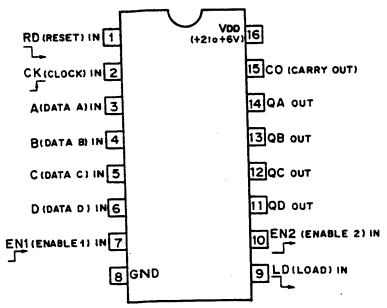

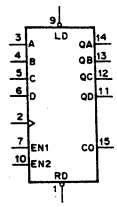

MODE SELECTION

CONTROL INPUTS				MODE
RD	LD	EN1	EN2	
0	X	X	X	RESET (ASYNCHRONOUS)
1	0	X	X	PRESET (SYNCHRONOUS)
1	1	0	X	NO COUNT
1	1	X	0	NO COUNT
1	1	1	1	COUNT

0; LOW LEVEL
1; HIGH LEVEL
X; DON'T CARE

COUNT SEQUENCE

COUNT	OUTPUTS			
	QD	QC	QB	QA
0	0	0	0	0
1	0	0	0	1
2	0	0	1	0
3	0	0	1	1
4	0	1	0	0
5	0	1	0	1
6	0	1	1	0
7	0	1	1	1
8	1	0	0	0
9	1	0	0	1
10	1	0	1	0
11	1	0	1	1
12	1	1	0	0
13	1	1	0	1
14	1	1	1	0
15	1	1	1	1

CARRY OUTPUT "CO"

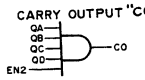

CO IS HIGH WHEN EN2 INPUT IS HIGH AND COUNT IS "15".

SN74HC174NS (TI) FLAT PACKAGE

C-MOS D-TYPE FLIP-FLOP WITH RESET
– TOP VIEW –

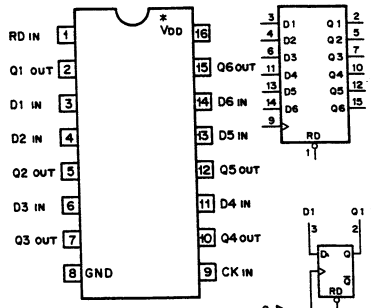

EACH FLIP-FLOP

INPUT			OUT
RD	CK	D	Q
0	X	X	0
1	↑	0	0
1	↑	1	1
1	0	X	Q0

0; LOW LEVEL
1; HIGH LEVEL
X; DON'T CARE

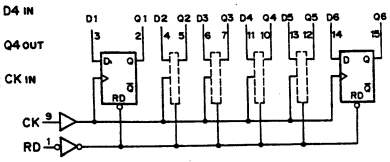

*

TYPE	VDD
74AC	+3.3 to +5V
74ACT	+5V
74HC	+2 to +6V

SN74HC163NS (TI) (V_{DD} = +2 to +6V) FLAT PACKAGE

C-MOS PRESETTABLE SYNCHRONOUS 4-BIT BINARY COUNTER
– TOP VIEW –

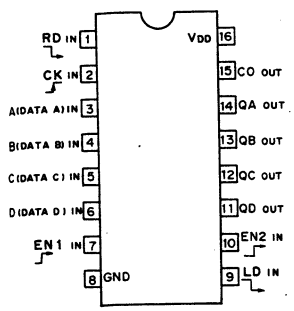

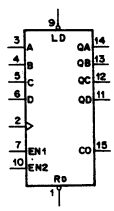

MODE SELECTION

CONTROL INPUTS				MODE
RD	LD	EN1	EN2	
0	X	X	X	RESET (SYNCHRONOUS)
1	0	X	X	PRESET (SYNCHRONOUS)
1	1	0	X	NO COUNT
1	1	X	0	NO COUNT
1	1	1	1	COUNT

COUNT SEQUENCE

COUNT	OUTPUTS			
	QD	QC	QB	QA
0	0	0	0	0
1	0	0	0	1
2	0	0	1	0
3	0	0	1	1
4	0	1	0	0
5	0	1	0	1
6	0	1	1	0
7	0	1	1	1
8	1	0	0	0
9	1	0	0	1
10	1	0	1	0
11	1	0	1	1
12	1	1	0	0
13	1	1	0	1
14	1	1	1	0
15	1	1	1	1

CARRY OUTPUT "CO"

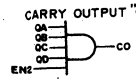

CO IS HIGH WHEN EN2 INPUT IS HIGH AND COUNT IS "15".

SN74HC193NS (TI) FLAT PACKAGE

C-MOS PRESETTABLE SYNCHRONOUS 4-BIT UP/DOWN COUNTER
– TOP VIEW –

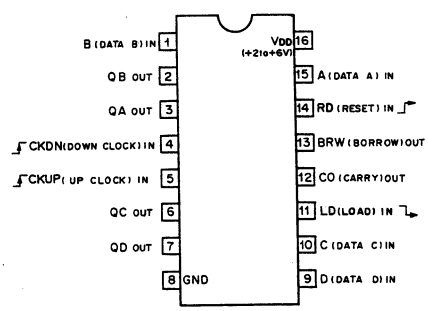

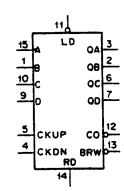

CONTROL INPUT				MODE
RD	LD	CKUP	CKDN	
1	X	X	X	RESET TO ZERO
0	0	X	X	PRESET
0	1	↑	1	UP COUNT
0	1	1	↑	DOWN COUNT
0	1	1	1	NO COUNT

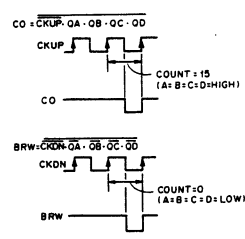

COUNT	OUTPUT			
	QD	QC	QB	QA
0	0	0	0	0
1	0	0	0	1
2	0	0	1	0
3	0	0	1	1
4	0	1	0	0
5	0	1	0	1
6	0	1	1	0
7	0	1	1	1
8	1	0	0	0
9	1	0	0	1
10	1	0	1	0
11	1	0	1	1
12	1	1	0	0
13	1	1	0	1
14	1	1	1	0
15	1	1	1	1

UP COUNT
DOWN COUNT

0; LOW LEVEL
1; HIGH LEVEL
X; DON'T CARE

SN74HC240N (TI) (V_{DD} = +2 to +6V)
SN74HC240NS (TI) (V_{DD} = +2 to +6V) FLAT PACKAGE

C-MOS 3-STATE INVERTER/LINE DRIVER
– TOP VIEW –

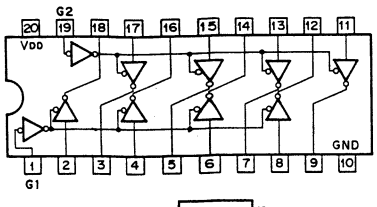

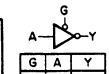

G	A	Y
0	0	1
0	1	0
1	X	HI-Z

0 ; LOW LEVEL
1 ; HIGH LEVEL
X ; DON'T CARE
HI-Z ; HIGH IMPEDANCE

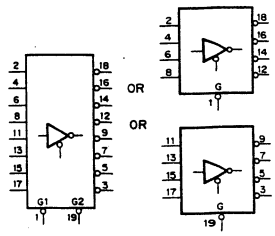

SN74HC244N (TI)
SN74HC244NS (TI) FLAT PACKAGE

C-MOS BUS BUFFER WITH 3-STATE OUTPUTS
– TOP VIEW –

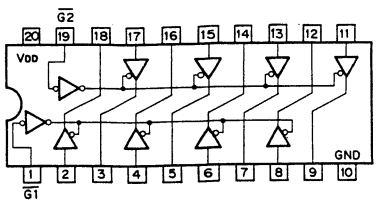

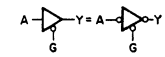

G	A	Y
0	0	0
0	1	1
1	X	HI-Z

0 ; LOW LEVEL
1 ; HIGH LEVEL
X ; DON'T CARE
HI-Z ; HIGH IMPEDANCE

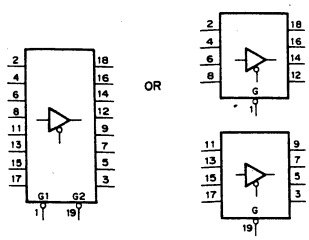

NOTE :

TYPE	VDD
AC HC 40H	+2 to +6V
ACT HCT	+5V

SN74HC245N (TI)
SN74HC245NS (TI) FLAT PACKAGE

C-MOS BILATERAL BUS TRANSCEIVERS WITH 3-STATE OUTPUTS
– TOP VIEW –

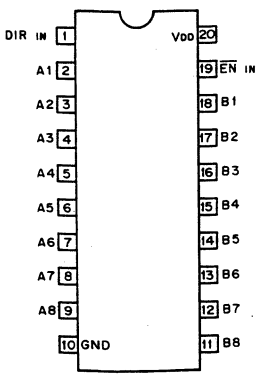

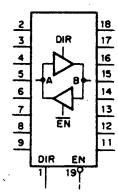

NOTE :

TYPE	VDD
AC HC	+2 to +6V
ACT HCT	+5V

EN	DIR	OPERATION
0	0	B to A
0	1	A to B
1	X	HI-Z

0 ; LOW LEVEL
1 ; HIGH LEVEL
X ; DON'T CARE
HI-Z ; HIGH IMPEDANCE

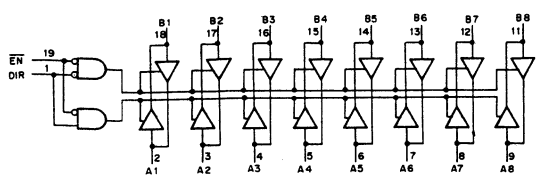

SN74HC273NS (TI) FLAT PACKAGE

C-MOS D-TYPE FLIP-FLOP WITH RESET
– TOP VIEW –

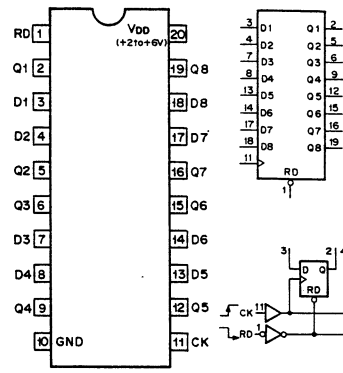

EACH FLIP – FLOP

INPUT			OUT
RD	CK	D	Q
0	X	X	0
1	↑	0	0
1	↑	1	1
1	0	X	Q0

0 ; LOW LEVEL
1 ; HIGH LEVEL
X ; DON'T CARE

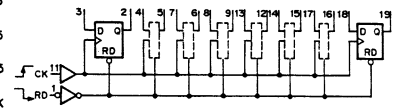

SN74HC30NS (TI) FLAT PACKAGE

C-MOS 8-INPUT POSITIVE-NAND GATE
– TOP VIEW –

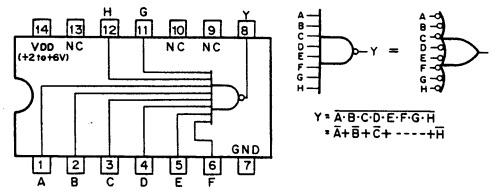

$Y = \overline{A \cdot B \cdot C \cdot D \cdot E \cdot F \cdot G \cdot H}$
$= \overline{A} + \overline{B} + \overline{C} + \cdots\cdots + \overline{H}$

SN74HC32N (TI)
SN74HC32NS (TI) FLAT PACKAGE

C-MOS 2-INPUT OR GATE
– TOP VIEW –

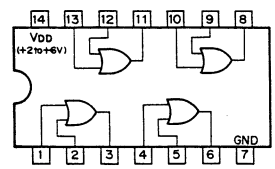

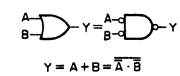

$Y = A + B = \overline{\overline{A} \cdot \overline{B}}$

A	B	Y
0	0	0
0	1	1
1	0	1
1	1	1

0 ; LOW LEVEL
1 ; HIGH LEVEL

SN74HC368NS (TI) FLAT PACKAGE

C-MOS BUS INVERTER WITH 3-STATE OUTPUTS
– TOP VIEW –

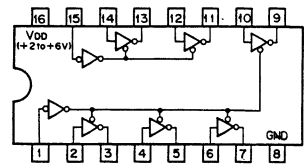

G	A	Y
0	0	1
0	1	0
1	X	HI-Z

0 ; LOW LEVEL
1 ; HIGH LEVEL
X ; DON'T CARE
HI-Z ; HIGH IMPEDANCE

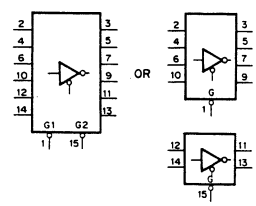

SN74HC373N (TI) (V_{DD} = +2 to +6V)
SN74HC373NS (TI) (V_{DD} = +2 to +6V) FLAT PACKAGE

C-MOS 3-STATE OUTPUTS OCTAL LATCHES
– TOP VIEW –

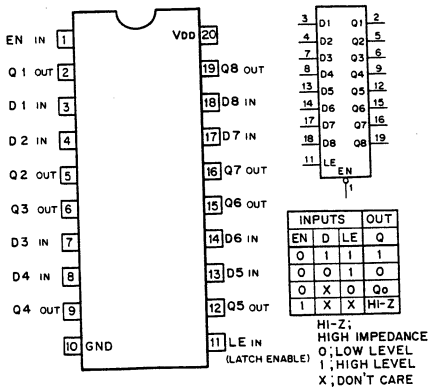

INPUTS			OUT
EN	D	LE	Q
0	1	1	1
0	0	1	0
0	X	0	Qo
1	X	X	Hi-Z

HI-Z; HIGH IMPEDANCE
0 ; LOW LEVEL
1 ; HIGH LEVEL
X ; DON'T CARE

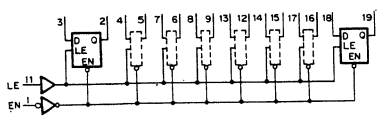

SN74HC4040NS (TI) FLAT PACKAGE

C-MOS 12-STAGE RIPPLE CARRY BINARY COUNTER/DRIVER
– TOP VIEW –

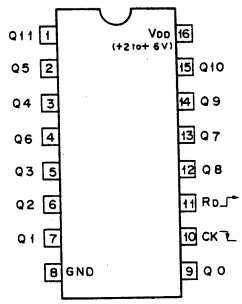

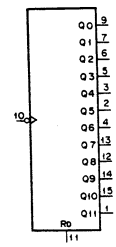

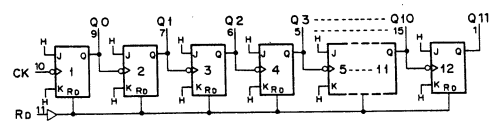

COUNT	Q11	Q10	Q9	Q8	Q7	Q6	Q5	Q4	Q3	Q2	Q1	Q0
0	0	0	0	0	0	0	0	0	0	0	0	0
1	0	0	0	0	0	0	0	0	0	0	0	1
2	0	0	0	0	0	0	0	0	0	0	1	0
3	0	0	0	0	0	0	0	0	0	0	1	1
4095	1	1	1	1	1	1	1	1	1	1	1	1

RD	Q11 ------ Q0
1	ALL LOW
0	COUNT

0 ; LOW LEVEL
1 ; HIGH LEVEL

SN74HC4024NS (TI) FLAT PACKAGE

C-MOS 7-BIT BINARY COUNTERS
– TOP VIEW –

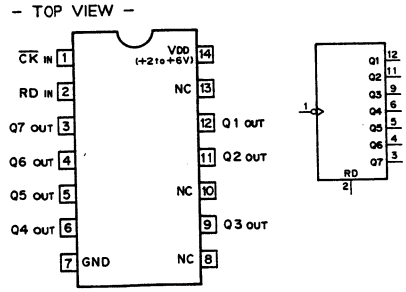

COUNT	INPUTS		OUTPUTS						
	CK	RD	Q7	Q6	Q5	Q4	Q3	Q2	Q1
0	X	1	0	0	0	0	0	0	0
1	↓	0	0	0	0	0	0	0	1
2	↓	0	0	0	0	0	0	1	0
3	↓	0	0	0	0	0	0	1	1
125	↓	0	1	1	1	1	1	0	1
126	↓	0	1	1	1	1	1	1	0
127	↓	0	1	1	1	1	1	1	1
-	0	0	NO CHANGE						
-	1	0							

0 ; LOW LEVEL
1 ; HIGH LEVEL
X ; DON'T CARE

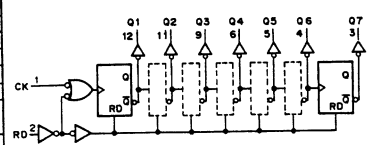

SN74HC4066NS (TI) FLAT PACKAGE

C-MOS BILATERAL ANALOG SWITCH
– TOP VIEW –

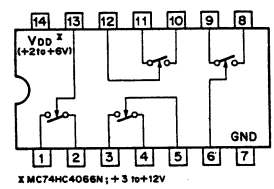

X MC74HC4066N ; +3 to+12V

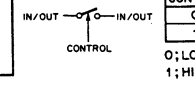

CONTROL	SWITCH
0	OFF
1	ON

0 ; LOW LEVEL
1 ; HIGH LEVEL

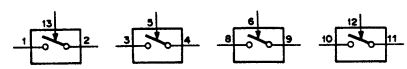

SN74HC573N (TI) (V_{DD} = +2 to +6V)

C-MOS 3-STATE OUTPUTS OCTAL LATCHES

– TOP VIEW –

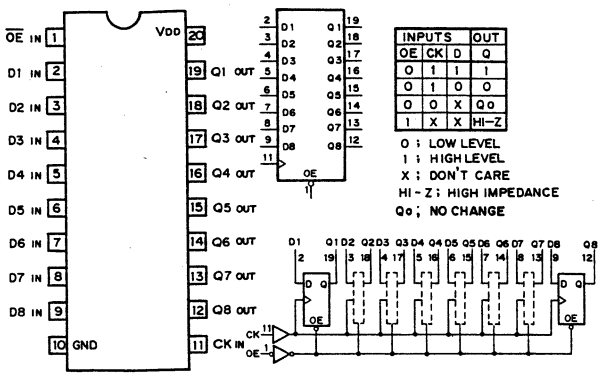

INPUTS			OUT
OE	CK	D	Q
0	↑	1	1
0	↑	0	0
0	0	X	Qo
1	X	X	HI-Z

0 ; LOW LEVEL
1 ; HIGH LEVEL
X ; DON'T CARE
HI-Z ; HIGH IMPEDANCE
Qo ; NO CHANGE

SN74HC574NS (TI) (V_{DD} = +2 to +6V) FLAT PACKAGE

C-MOS 3-STATE D-TYPE EDGE-TRIGGERED FLIP-FLOP

– TOP VIEW –

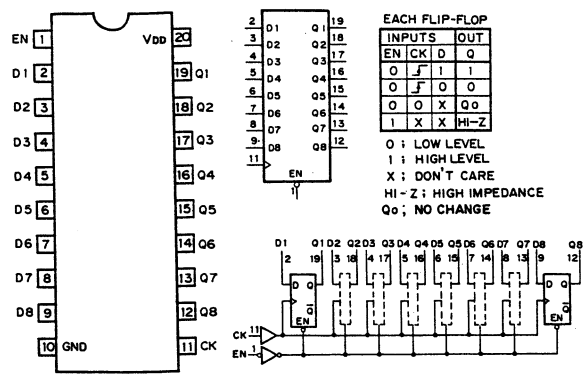

EACH FLIP-FLOP

INPUTS			OUT
EN	CK	D	Q
0	↑	1	1
0	↑	0	0
0	0	X	Qo
1	X	X	HI-Z

0 ; LOW LEVEL
1 ; HIGH LEVEL
X ; DON'T CARE
HI-Z ; HIGH IMPEDANCE
Qo ; NO CHANGE

SN74HC74NS (TI) FLAT PACKAGE

C-MOS D-TYPE FLIP FLOP WITH DIRECT SET/RESET

– TOP VIEW –

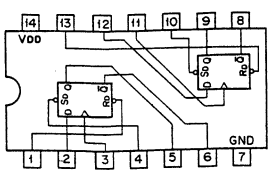

INPUTS				OUTPUTS	
$\overline{S_D}$	$\overline{R_D}$	CK	D	Qn+1	$\overline{Q_{n+1}}$
0	1	X	X	1	0
1	0	X	X	0	1
0	0	X	X	1	1
1	1	↑	1	1	0
1	1	↑	0	0	1
1	1	0	X	Qn	$\overline{Q_n}$

0;LOW LEVEL
1;HIGH LEVEL
X;DON'T CARE

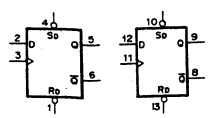

NOTE :

TYPE	V_{DD}
74AC/74HC	+2 to +6V
74ACT	+5V

SN74HC86NS (TI) FLAT PACKAGE

C-MOS EXCLUSIVE OR GATE

– TOP VIEW –

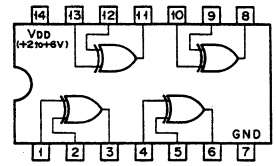

A	B	Y
0	0	0
0	1	1
1	0	1
1	1	0

0;LOW LEVEL
1;HIGH LEVEL

SN74LS00NS (TI) FLAT PACKAGE

TTL 2-INPUT POSITIVE-NAND GATE

– TOP VIEW –

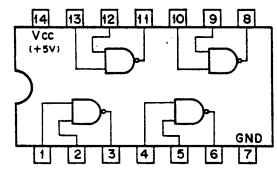

A	B	Y
0	0	1
0	1	1
1	0	1
1	1	0

0;LOW LEVEL
1;HIGH LEVEL

SN74LS06N (TI)

SN74LS06NS (TI) FLAT PACKAGE

TTL INVERTER BUFFER/DRIVER WITH OPEN-COLLECTOR

– TOP VIEW –

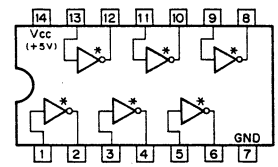

A	Y
0	1
1	0

0;LOW LEVEL
1;HIGH LEVEL
*;OPEN COLLECTOR

SN74LS08NS (TI) FLAT PACKAGE

TTL 2-INPUT POSITIVE-AND GATE

– TOP VIEW –

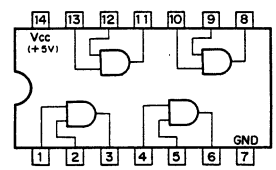

A	B	Y
0	0	0
0	1	0
1	0	0
1	1	1

0;LOW LEVEL
1;HIGH LEVEL

SN74LS11NS (TI) FLAT PACKAGE

TTL 3-INPUT POSITIVE-AND GATE

– TOP VIEW –

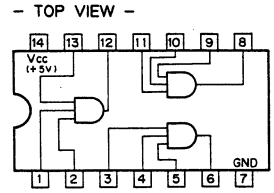

A	B	C	Y
0	0	0	0
0	0	1	0
0	1	0	0
0	1	1	0
1	0	0	0
1	0	1	0
1	1	0	0
1	1	1	1

0;LOW LEVEL
1;HIGH LEVEL

SN74LS123N (TI)
SN74LS123NS (TI) FLAT PACKAGE

TTL RETRIGGERABLE MONOSTABLE MULTIVIBRATOR WITH DIRECT RESET
– TOP VIEW –

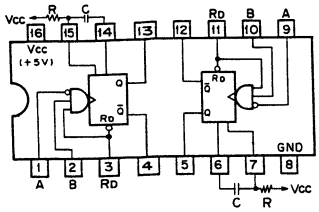

INPUTS			OUTPUTS	
RD	A	B	Q	$\overline{Q}$
0	X	X	0	1
X	1	X	0	1
X	X	0	0	1
1	0	↑	⎍	⎍
1	↓	1	⎍	⎍
↑	0	1	⎍	⎍

0; LOW LEVEL
1; HIGH LEVEL
X; DON'T CARE

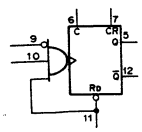

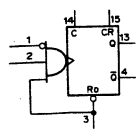

OUTPUT PULSE WIDTH

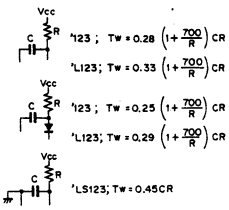

SN74LS164NS (TI) FLAT PACKAGE

TTL 8-BIT PARALLEL-OUT SERIAL SHIFT REGISTER
– TOP VIEW –

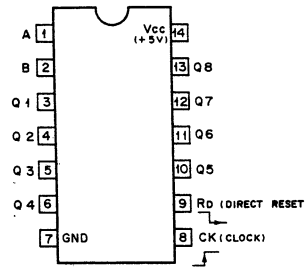

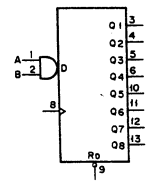

INPUTS				OUTPUTS			
RD	CK	A	B	Q1	Q2	----	Q8
0	X	X	X	0	0	0	0
1	0	X	X	Q1o	Q2o	----	Q8o
1	⎍	1	1	1	Q1n	----	Q7n
1	⎍	0	X	0	Q1n	----	Q7n
1	⎍	X	0	0	Q1n	----	Q7n

0; LOW LEVEL
1; HIGH LEVEL
X; DON'T CARE

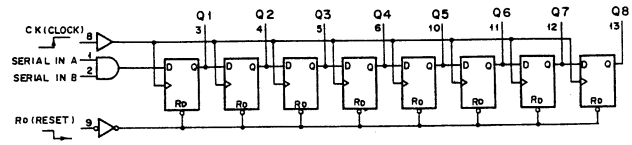

SN74LS157NS (TI) FLAT PACKAGE

TTL 2-LINE-TO-1-LINE DATA SELECTOR/MULTIPLEXER
– TOP VIEW –

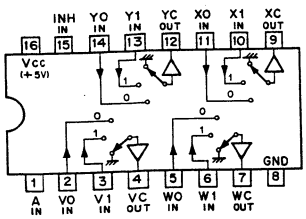

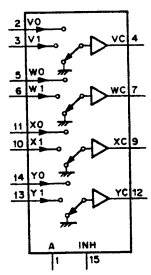

CONT. IN		ON CHANNEL
INH	A	
0	0	0
0	1	1
1	X	GND

0; LOW LEVEL
1; HIGH LEVEL
X; DON'T CARE

SN74LS158NS (TI) FLAT PACKAGE

TTL 2-LINE-TO-1-LINE INVERTED DATA SELECTOR/MULTIPLEXER
– TOP VIEW –

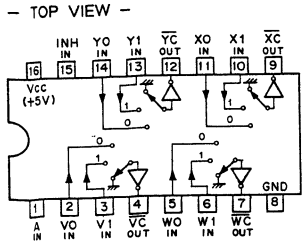

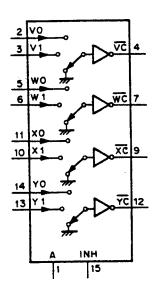

CONT. IN		ON CHANNEL
INH	A	
0	0	0
0	1	1
1	X	GND

0; LOW LEVEL
1; HIGH LEVEL
X; DON'T CARE

SN74LS221NS (TI) FLAT PACKAGE

TTL MONOSTABLE MULTIVIBRATOR WITH SCHMITT TRIGGER INPUT
– TOP VIEW –

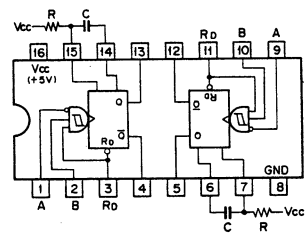

INPUTS			OUTPUTS	
RD	A	B	Q	$\overline{Q}$
0	X	X	0	1
X	1	X	0	1
X	X	0	0	1
1	0	↑	⎍	⎍
1	↓	1	⎍	⎍
↑	0	1	⎍	⎍

0; LOW LEVEL
1; HIGH LEVEL
X; DON'T CARE

OUTPUT PULSE WIDTH = 0.7CR

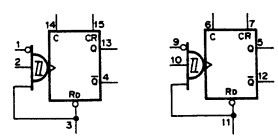

SN74LS244N (TI)

TTL 3-STATE SCHMITT TRIGGER BUFFER/DRIVER
– TOP VIEW –

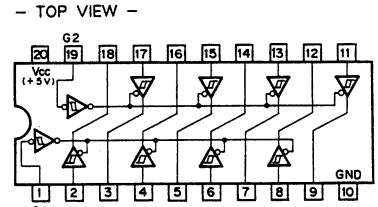

G	A	Y
0	0	0
0	1	1
1	X	HI-Z

0; LOW LEVEL
1; HIGH LEVEL
X; DON'T CARE
HI-Z; HIGH IMPEDANCE

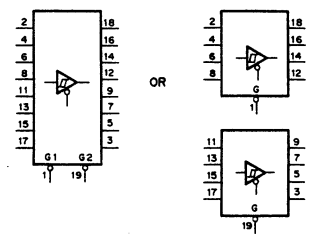

SN74LS245N (TI)

TTL BILATERAL SCHMITT TRIGGER BUS TRANSCEIVERS
WITH 3-STATE OUTPUTS
– TOP VIEW –

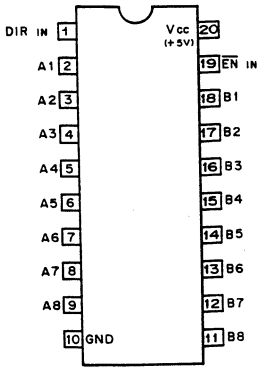

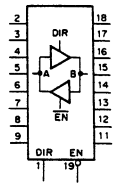

EN	DIR	OPERATION
0	0	B to A
0	1	A to B
1	X	HI-Z

0; LOW LEVEL
1; HIGH LEVEL
X; DON'T CARE
HI-Z; HIGH IMPEDANCE

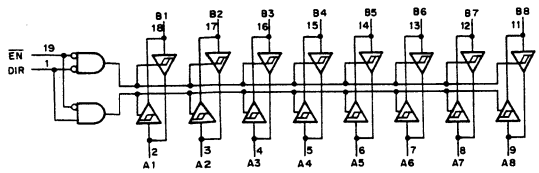

SN74LS697N

TTL SYNCHRONOUS UP/DOWN COUNTERS
WITH OUTPUT REGISTERS AND MULTIPLEXED
3-STATE OUTPUTS (BINARY COUNTER, DIRECT CLEAR)
– TOP VIEW –

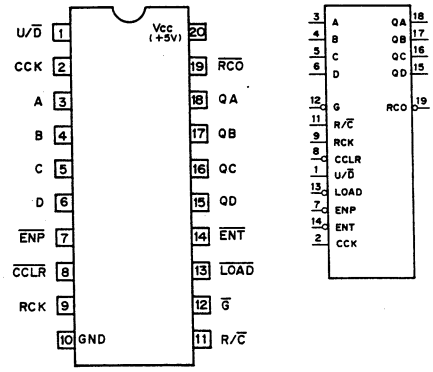

CCK	;COUNTER CLOCK
CCLR	;COUNTER CLEAR
ENP	;FEATURE ENABLE P
ENT	;FEATURE ENABLE T
G	;OUTPUT GATE
R/C	;REGISTER/COUNTER SELECT
RCK	;REGISTER CLOCK
RCO	;RIPPLE-CARRY OUTPUT
U/D	;UP/DOWN

SN74LS685NS (TI) FLAT PACKAGE

TTL 8-BIT MAGNITUDE COMPARATOR
WITH OPEN-COLLECTOR OUTPUTS
– TOP VIEW –

SN74LS685N

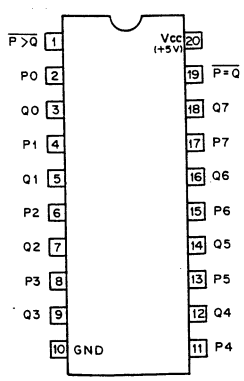

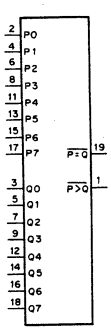

DATA INPUTS		OUTPUTS	
P0-P7	Q0-Q7	P=Q	P>Q
P=Q		0	1
P>Q		1	0
P<Q		1	1

1; HIGH LEVEL
0; LOW LEVEL

schematics of inputs and outputs

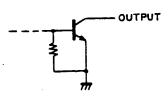

SN75107ANS (TI) FLAT PACKAGE

LINE RECEIVER
– TOP VIEW –

SN75107AN

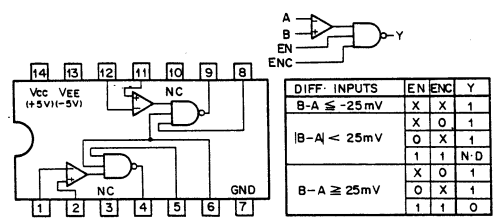

DIFF. INPUTS	EN	ENC	Y
B-A ≦ -25mV	X	X	1
	X	0	1
|B-A| < 25mV	0	X	1
	1	1	N.D
	X	0	1
B-A ≧ 25mV	0	X	1
	1	1	0

0; LOW LEVEL
1; HIGH LEVEL
X; DON'T CARE
ND; NOT DEFINED

SN75179BP (TI)

BIPOLAR LINEAR IC
– TOP VIEW –

SN75179BP

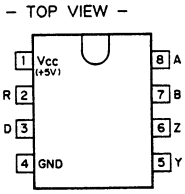

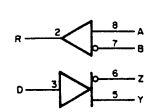

–DRIVER–

INPUT	OUTPUTS	
D	Y	Z
H	H	L
L	L	H

–RECEIVER–

DIFFERENTIAL INPUTS A-B	OUTPUTS R
VID ≧ 0.2V	H
-0.2V < VID < 0.2V	?
VID ≦ -0.2V	L

H=HIGH LEVEL L=LOW LEVELL ?=INDETERMINATE

TA7257P (TOSHIBA)

FULL-BRIDGE DRIVER FOR DC MOTOR (H-SWITCH)
– PRINTED SIDE VIEW –

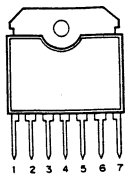

IN1	IN2	OUT1	OUT2	MODE
1	1	0	0	BRAKE
0	1	0	1	FORWARD/REVERSE
1	0	1	0	REVERSE/FORWARD
0	0	HI-Z		STOP

0; LOW LEVEL HI-Z; HIGH INPEDANCE
1; HIGH LEVEL

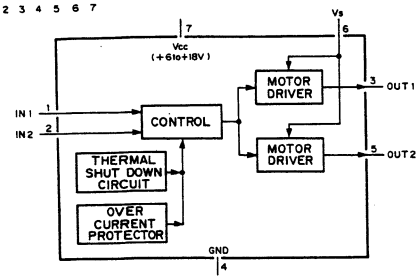

TA7267P (TOSHIBA)

DC MOTOR DRIVER
– PRINTED SIDE VIEW –

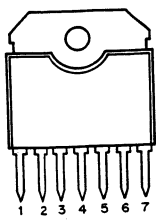

INPUTS		OUTPUTS		MODE
1	2	1	2	
1	1	0	0	BRAKE
0	1	0	1	ROTATION/ REV. ROTATION
1	0	1	0	REV. ROTATION / ROTATION
0	0	HI-Z		STOP

0 ; LOW LEVEL
1 ; HIGH LEVEL
HI-Z; HIGH IMPEDANCE

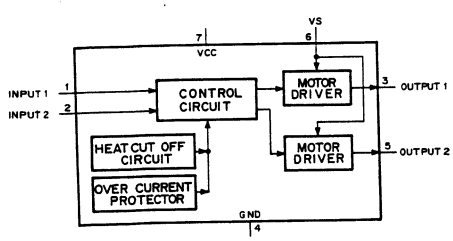

TA7357AP (TOSHIBA)

SYNC SEPARATOR/HD PULSE GENERATOR
– SIDE VIEW –

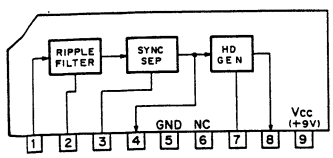

TC4030BFHB (TOSHIBA) FLAT PACKAGE

C-MOS EXCLUSIVE OR GATE
– TOP VIEW –

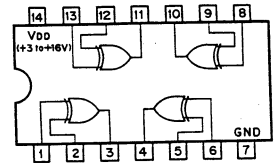

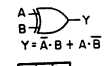

A	B	Y
0	0	0
0	1	1
1	0	1
1	1	0

0: LOW LEVEL
1: HIGH LEVEL

TC40H000F (TOSHIBA) FLAT PACKAGE

C-MOS 2-INPUT NAND GATE
– TOP VIEW –

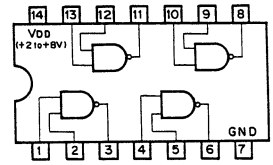

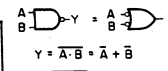

A	B	Y
0	0	1
0	1	1
1	0	1
1	1	0

0; LOW LEVEL
1; HIGH LEVEL

TC40H032F (TOSHIBA) FLAT PACKAGE

C-MOS 2-INPUT POSITIVE-OR GATE
– TOP VIEW –

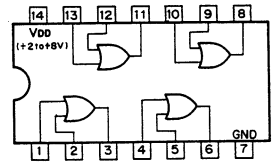

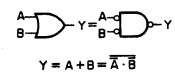

A	B	Y
0	0	0
0	1	1
1	0	1
1	1	1

0: LOW LEVEL
1: HIGH LEVEL

TC40H139F (TOSHIBA) FLAT PACKAGE

C-MOS 2-TO-4-LINE DECODER/DEMULTIPLXER
– TOP VIEW –

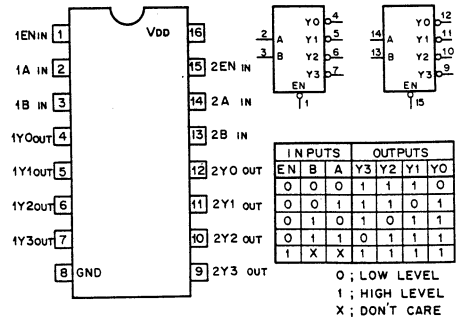

IN PUTS			OUTPUTS			
EN	B	A	Y3	Y2	Y1	Y0
0	0	0	1	1	1	0
0	0	1	1	1	0	1
0	1	0	1	0	1	1
0	1	1	0	1	1	1
1	X	X	1	1	1	1

0 ; LOW LEVEL
1 ; HIGH LEVEL
X ; DON'T CARE

TC40H163F (TOSHIBA) FLAT PACKAGE

C-MOS PRESETTABLE SYNCHRONOUS 4-BIT BINARY COUNTER

– TOP VIEW –

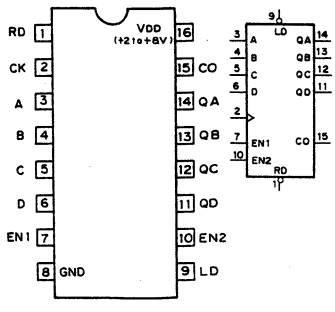

MODE SELECTION

CONT. INPUTS				MODE
RD	LD	EN1	EN2	
0	X	X	X	RESET (SYNCHRONOUS)
1	0	X	X	PRESET (SYNCHRONOUS)
1	1	0	X	NO COUNT
1	1	X	0	NO COUNT
1	1	1	1	COUNT

COUNT SEQUENCE

COUNT	OUTPUTS			
	QD	QC	QB	QA
0	0	0	0	0
1	0	0	0	1
2	0	0	1	0
3	0	0	1	1
⋮	⋮	⋮	⋮	⋮
13	1	1	0	1
14	1	1	1	0
15	1	1	1	1

0 ; LOW LEVEL
1 ; HIGH LEVEL
X ; DON'T CARE

CARRY OUTPUT "CO"

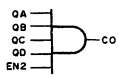

CO GOES HIGH WHEN EN2 IS HIGH AND COUNT IS "15".

TC74HC221F (TOSHIBA) FLAT PACKAGE

C-MOS MONOSTABLE MULTIVIBRATOR WITH SCHMITT TRIGGER INPUT

– TOP VIEW –

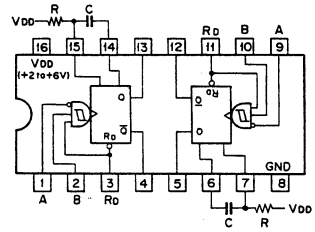

INPUTS			OUTPUTS	
RD	A	B	Q	$\overline{Q}$
0	X	X	0	1
X	1	X	0	1
X	X	0	0	1
1	0	↑	⌐	¬
1	↓	1	⌐	¬
↑	0	1	⌐	¬

0 ; LOW LEVEL
1 ; HIGH LEVEL
X ; DON'T CARE

OUTPUT PULSE WIDTH = 0.7CR

TC74HC4049F (TOSHIBA) FLAT PACKAGE

C-MOS HEX BUFFER/CONVERTER (INVERTING)

– TOP VIEW –

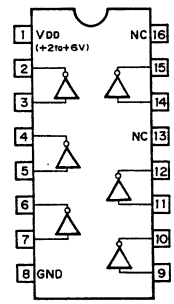

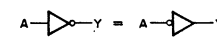

Y = $\overline{A}$

A	Y
0	1
1	0

0 ; LOW LEVEL
1 ; HIGH LEVEL

TC504013BF (TOSHIBA) FLAT PACKAGE
TC504013BP (TOSHIBA)

C-MOS D-TYPE FLIP FLOP WITH DIRECT SET/RESET

– TOP VIEW –

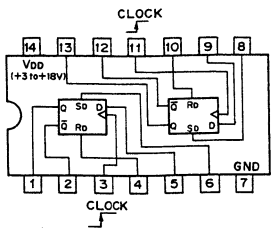

DIRECT R-S FLIP FLOP

Sd	Rd	Q	$\overline{Q}$
0	0	Qn	$\overline{Qn}$
0	1	0	1
1	0	1	0
1	1	0	1

D-TYPE FLIP FLOP

CKn	CKn+1
0	Q
0	0
1	1

CLOCK CK; ⌐¬

CKn ; BEFORE CLOCK
CKn+1 ; AFTER CLOCK

0 ; LOW LEVEL
1 ; HIGH LEVEL

TC74HC4050AP (TOSHIBA)
TC74HC4050F (TOSHIBA) FLAT PACKAGE

C-MOS NON-INVERTING TYPE BUFFER/CONVERTER

– TOP VIEW –

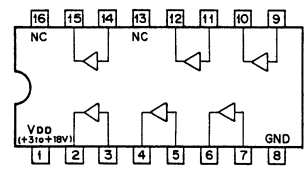

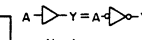

Y = A

A	Y
0	0
1	1

0 ; LOW LEVEL
1 ; HIGH LEVEL

TC74HC123F (TOSHIBA) FLAT PACKAGE

C-MOS DUAL RETRIGGERABLE MONOSTABLE MULTIVIBRATOR

– TOP VIEW –

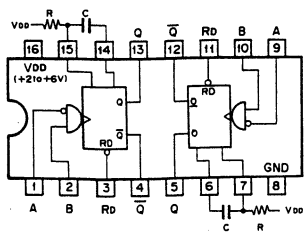

INPUT			OUTPUT	
RD	A	B	Q	$\overline{Q}$
0	X	X	0	1
1	1	X	0	1
1	X	0	0	1
1	0	↓	⌐	¬
1	↓	1	⌐	¬
↓	0	1	⌐	¬

0 ; LOW LEVEL
1 ; HIGH LEVEL
X ; DON'T CARE

OUTPUT PULSE WIDTH = 0.46CR

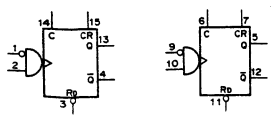

TC74HC4538AP (TOSHIBA)

C-MOS DUAL RETRIGGERABLE/NON-RETRIGGERABLE MONOSTABLE MULTIVIBRATOR

– TOP VIEW –

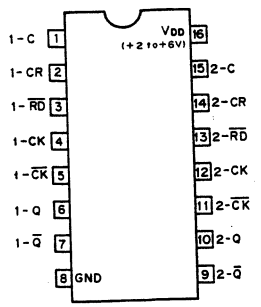

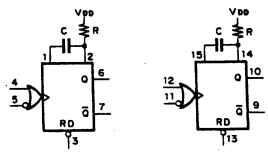

OUTPUT PULSE WIDTH = k·C·R

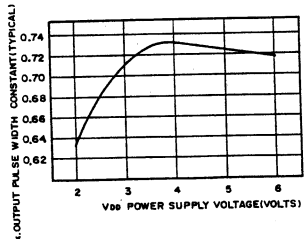

RETRIGGERABLE M.M.V

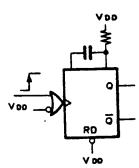

NON-RETRIGGERABLE M.M.V

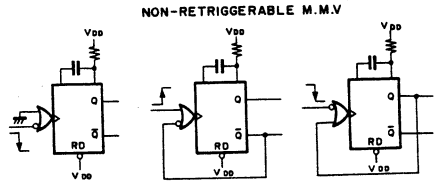

TL082CP (TI)

TL082CPS (TI) FLAT PACKAGE

OPERATIONAL AMPLIFIER

(J FET-INPUT)

– TOP VIEW –

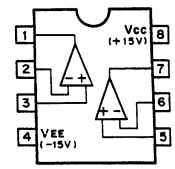

TL084CN (TI)

TL084CNS (TI) FLAT PACKAGE

OPERATIONAL AMPLIFIER

(J FET-INPUT)

– TOP VIEW –

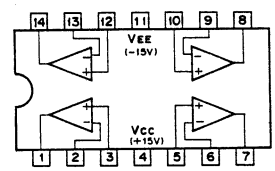

TD62901P (TOSHIBA)

HIGH SPEED 8-BIT D/A CONVERTER

– TOP VIEW –

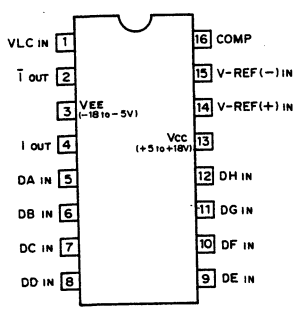

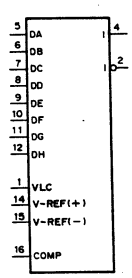

COMP ; COMPENSATION
DA–DH ; BINARY DATA
I ; COMPLEMENTARY CURRENT
V-REF ; REFERENCE VOLTAGE
VLC ; THRESHOLD LEVEL CONTROL

TL431CLP (TI)

ADJUSTABLE PRECISION SHUNT REGULATOR

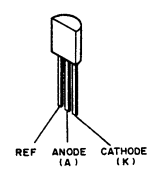

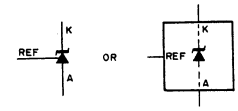

TL072ACP (TI)

OPERATIONAL AMPLIFIER

(LOW-NOISE, JFET-INPUT)

– TOP VIEW –

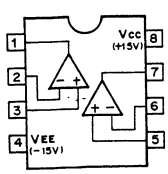

TL431CPS (TI) FLAT PACKAGE

ADJUSTABLE PRECISION SHUNT REGULATOR

– TOP VIEW –

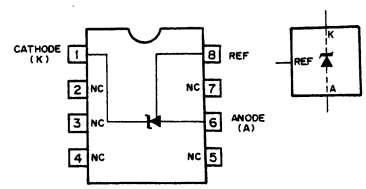

C

TL601CPS (TI) FLAT PACKAGE

P-MOS ANALOG SWITCH

- TOP VIEW -

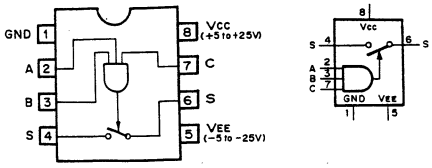

CONT IN			S
A	B	C	
0	X	X	OFF(OPEN)
X	0	X	OFF(OPEN)
X	X	0	OFF(OPEN)
1	1	1	ON(CLOSED)

0;LOW LEVEL
1;HIGH LEVEL
X;DON'T CARE

TLC548IP (TI)

C-MOS 8 BIT A/D CONVERTER

- TOP VIEW -

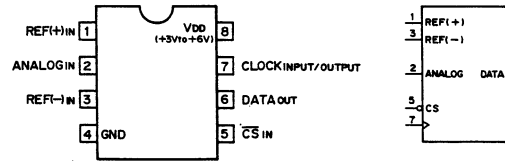

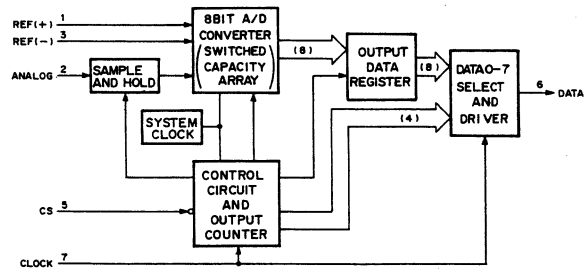

TL607CPS (TI) FLAT PACKAGE

P-MOS ANALOG SWITCH

- TOP VIEW -

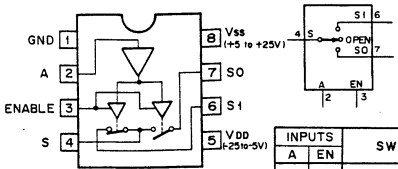

INPUTS		SW
A	EN	
X	0	OPEN
0	1	6 to 7
1	1	6 to 7

0;LOW LEVEL
1;HIGH LEVEL
X;DON'T CARE

TL610CPS (TI) FLAT PACKAGE

MOS ANALOG SWITCH

- TOP VIEW -

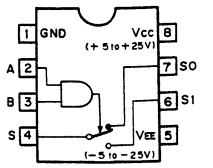

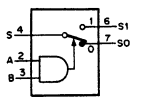

CONT IN		ON CHANNEL
A	B	
0	0	SO
0	1	SO
1	0	SO
1	1	S1

0; LOW LEVEL
1; HIGH LEVEL

TMPZ84C011AF-6 (TOTHIBA)

C-MOS 8 BIT MICROPROCESSOR

– TOP VIEW –

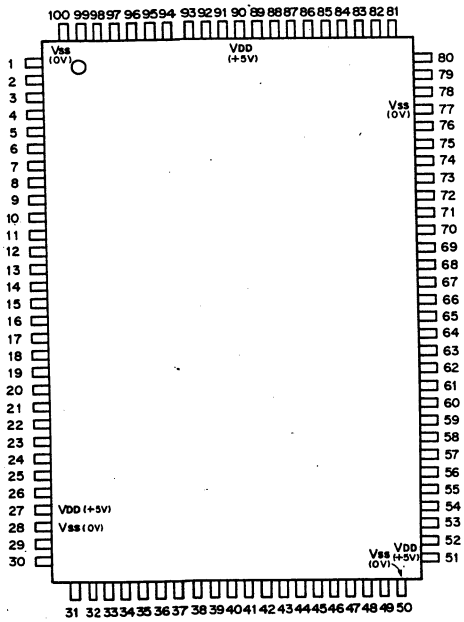

NO.	IN	OUT	SYMBOL	NO.	IN	OUT	SYMBOL
1	○		IEI	51			Vcc
2	○		CLK/TRG3	52		○	CLK
3	○		CLK/TRG2	53	○	○	PC7
4	○		CLK/TRG1	54	○	○	PC6
5	○		CLK/TRG0	55	○	○	PC5
6	○	○	D7	56	○	○	PC4
7	○	○	D6	57	○	○	PC3
8	○	○	D5	58	○	○	PC2
9	○	○	D4	59	○	○	PC1
10	○	○	D3	60	○	○	PC0
11	○	○	D2	61	○	○	PA7
12	○	○	D1	62	○	○	PA6
13	○	○	D0	63	○	○	PA5
14	○		$\overline{INT}$	64	○	○	PA4
15	○		EV	65	○	○	PA3
16		○	$\overline{HALT}$	66	○	○	PA2
17		○	$\overline{MREQ}$	67	○	○	PA1
18		○	$\overline{IORQ}$	68	○	○	PA0
19		○	$\overline{RD}$	69	○	○	PB7
20		○	$\overline{WR}$	70	○	○	PB6
21		○	$\overline{BUSACK}$	71	○	○	PB5
22	○		$\overline{WAIT}$	72	○	○	PB4
23	○		$\overline{BUSREQ}$	73	○	○	PB3
24	○		$\overline{RESET}$	74	○	○	PB2
25		○	$\overline{MT}$	75	○	○	PB1
26		○	$\overline{RFSH}$	76	○	○	PB0
27			Vcc	77			Vss
28			Vss	78	○	○	PE7
29		○	A0	79	○	○	PE6
30		○	A1	80	○	○	PE5
31		○	A2	81	○	○	PE4
32		○	A3	82	○	○	PE3
33		○	A4	83	○	○	PE2
34		○	A5	84	○	○	PE1
35		○	A6	85	○	○	PE0
36		○	A7	86	○		TEST
37		○	A8	87		○	IEO
38		○	A9	88	○	○	PD7
39		○	A10	89	○	○	PD6
40		○	A11	90			Vcc
41		○	A12	91	○	○	PD5
42		○	A13	92	○	○	PD4
43		○	A14	93	○	○	PD3
44		○	A15	94	○	○	PD2
45	○		$\overline{NMI}$	95	○	○	PD1
46	○		MS2	96	○	○	PD0
47	○		MS1	97		○	ZC/TO2
48		○	XTAL2	98		○	ZC/TO1
49	○		XTAL1	99		○	ZC/TO0
50			Vss	100			Vss

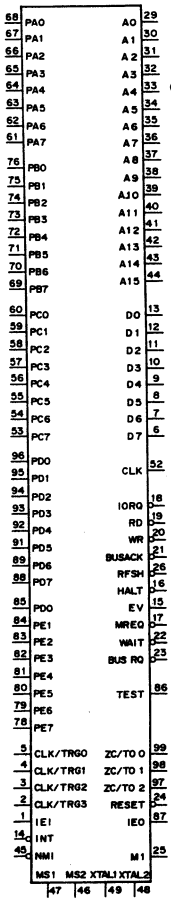

AO–A15 ; 3–STATE ADDRESS BUS OUTPUTS
BUSACK ; BUS ACKNOWLEDGE OUTPUT
BUS REQ ; BUS REQUEST INPUT
CLK ; CLOCK OUTPUT
CLK/TRGO–3 ; EXTERNAL CLOCK / TIMER TRIGGERO–3 INPUTS
DO–D7 ; 3–STATE DATA BUS INPUTS/OUTPUTS
EV ; EVALUATER INPUT
HALT ; HALT OUTPUT
IEI/IEO ; CTC INTERRUPT ENABLE INPUT/OUTPUT
INT ; MASKABLE INTERRUPT REQUEST INPUT
IORQ ; 3–STATE I/O REQUEST OUTPUT
M1 ; 3–STATE MACHINE CYCLE 1 OUTPUT
MREQ ; 3–STATE REQUEST OUTPUT
MS1/MS2 ; MODE SELECT 1/2 INPUTS
NMI ; NON–MASKABLE INTERRUPT REQUEST INPUT
PA0–PA7 ; PB0–PB7 ; PC0–PC7 ; PD0–PD7 ; PE0–PE7 ; } 3–STATE I/O PORT
RD ; 3–STATE READ OUTPUT
RESET ; RESET INPUT
RFSH ; REFRESH OUTPUT
TEST ; TEST INPUT
WAIT ; WAIT REQUEST INPUT
WR ; 3–STATE WRITE OUTPUT
ZC/TO0–2 ; ZERO COUNT/TIME OUT 0–2 OUTPUTS

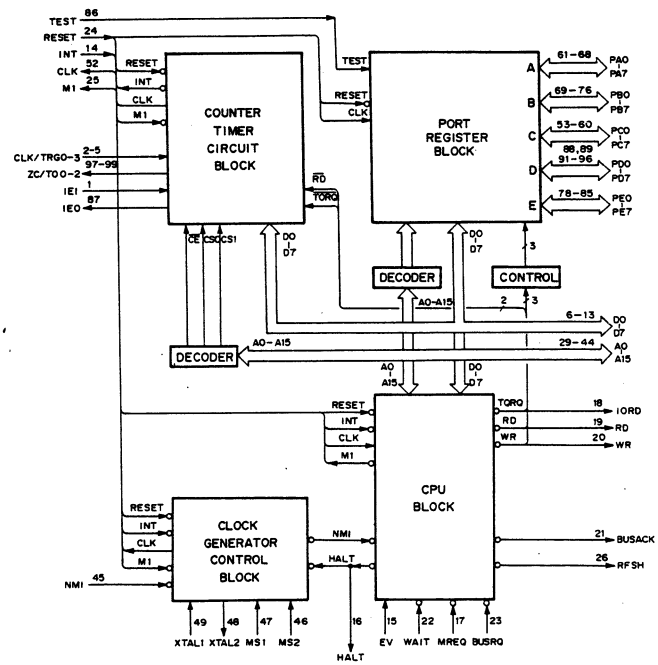

TMPZ84C30AP-6 (TOSHIBA)

C-MOS COUNTER TIMER CIRCUIT

– TOP VIEW –

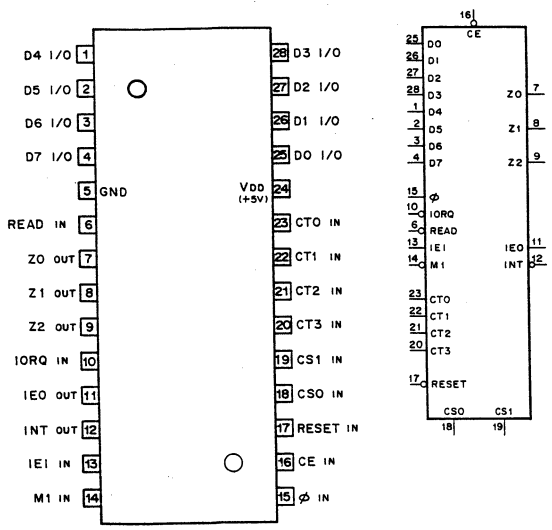

ø ; SYSTEM CLOCK
CE ; CHIP ENABLE
CSO,CS1 ; CHANNEL SELECT
CTO-CT3 ; EXTERNAL CLOCK/TIMER TRIGGER
DO-D7 ; 3-STATE DATA INPUT/OUTPUT
IEI ; INTERRUPT ENABLE INPUT
IEO ; INTERRUPT ENABLE OUTPUT
INT ; INTERRUPT REQUEST (OPEN DRAIN)
IORQ ; I/O REQUEST
M1 ; MACHINE CYCLE 1
READ ; READ CYCLE STATUS
ZO-Z2 ; ZERO COUNT/TIME OUT

CHANNEL SELECT FUNCTION

CS1	CSO	SELECTED CHANNEL
0	0	0
0	1	1
1	0	2
1	1	3

0;LOW LEVEL
1;HIGH LEVEL

TMPZ84C40AP-6 (TOSHIBA)

C-MOS 2-CHANNEL SERIAL INPUT/OUTPUT FOR MICROCOMPUTER SYSTEM

– TOP VIEW –

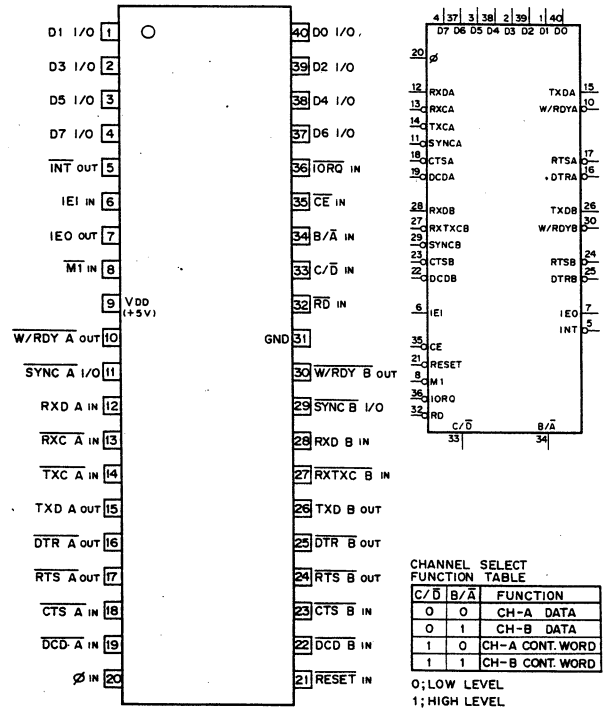

CHANNEL SELECT FUNCTION TABLE

C/D	B/A	FUNCTION
0	0	CH-A DATA
0	1	CH-B DATA
1	0	CH-A CONT. WORD
1	1	CH-B CONT. WORD

0;LOW LEVEL
1;HIGH LEVEL

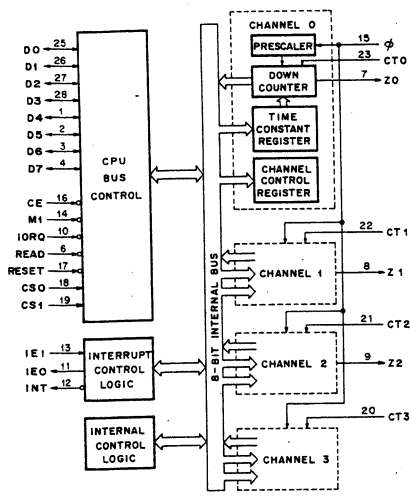

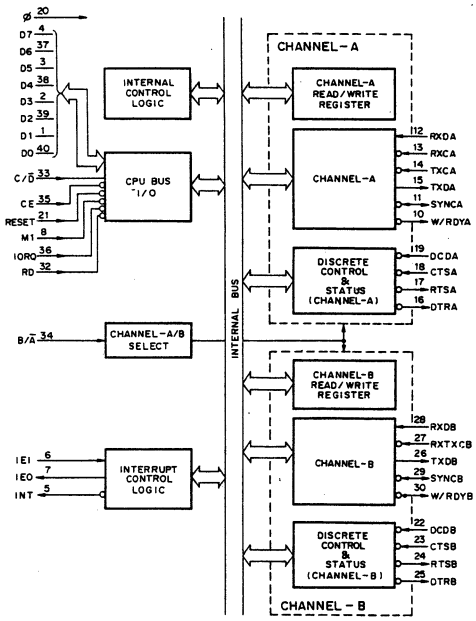

ø ; SYSTEM CLOCK IN
D7-DO ; DATA BUS(3 STATE)I/O
C/D ; CONTROL/DATA SELECT IN
CE ; CHIP ENABLE IN
M1 ; MACHINE CYCLE 1 IN
IORQ ; I/O REQUEST IN
RD ; READ IN
B/A ; CHANNEL B/A SELECT IN
IEI ; INTERRUPT ENABLE IN
IEO ; INTERRUPT ENABLE OUT
INT ; INTERRUPT OUT

RXD ; RECEIVE DATA IN
RXC ; RECEIVE CLOCK IN
TXC ; TRANSMIT CLOCK IN
TXD ; TRANSMIT DATA OUT
SYNC ; EXTERNAL CHARACTER SYNCHRONIZATION I/O
W/RDY ; WAIT/READY OUT
DCD ; DATA CARRIER DETECT IN
CTS ; CLEAR TO SEND IN
RTS ; REQUEST TO SEND OUT
DTR ; DATA TERMINAL READY OUT

uPC1663G (NEC) FLAT PACKAGE
WIDEBAND VIDEO AMPLIFIER
– TOP VIEW –

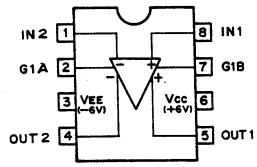

uPC324C (NEC)
QUAD. OP AMPLIFIER
– TOP VIEW –

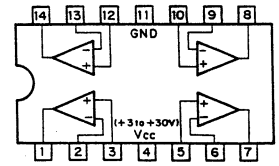

uPC311G2 (NEC) FLAT PACKAGE
VOLTAGE COMPARATOR
– TOP VIEW –

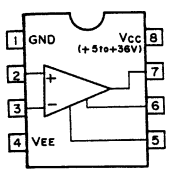

uPC339G2 (NEC) FLAT PACKAGE
COMPARATOR
– TOP VIEW –

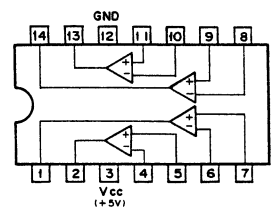

uPC319G2 (NEC) FLAT PACKAGE
DUAL VOLTAGE COMPARATOR
– TOP VIEW –

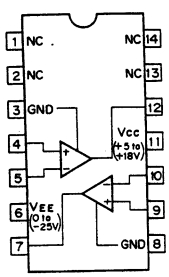

uPC648C (NEC)
12-BIT D/A CONVERTER WITH OPEN COLLECTOR OUTPUT
– TOP VIEW –

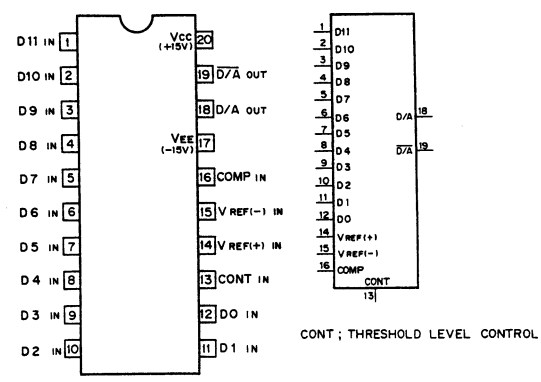

CONT ; THRESHOLD LEVEL CONTROL

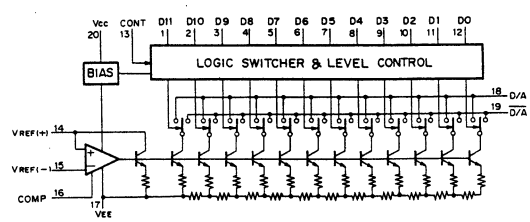

uPC7905H (NEC)

NEGATIVE VOLTAGE REGULATOR (1A)
– SIDE VIEW –

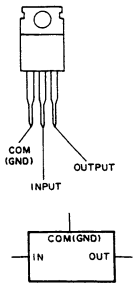

OUTPUT VOLTAGE	AN79??	FS79??	uA79??UC	uPC79??H	MC79??CT
-2V	------	------	--------	--------	MC7902CT
-5V	AN7905	FS7905	uA7905UC	uPC7905H	MC7905CT
-5.2V	------	------	--------	--------	MC7905.2CT
-6V	AN7906	------	uA7906UC	--------	MC7906CT
-7V	AN7907	------	--------	--------	--------
-8V	AN7908	------	uA7908UC	uPC7908H	MC7908CT
-9V	AN7909	------	--------	--------	--------
-10V	AN7910	------	--------	--------	--------
-12V	AN7912	------	uA7912UC	uPC7912H	MC7912CT
-15V	AN7915	------	uA7915UC	uPC7915H	MC7915CT
-18V	AN7918	------	uA7918UC	uPC7918H	MC7918CT
-20V	AN7920	------	--------	--------	--------
-24V	AN7924	------	uA7924UC	uPC7924H	MC7924CT

OUTPUT VOLTAGE	NJM79??A
-2V	--------
-5V	NJM7905A
-5.2V	--------
-6V	NJM7906A
-7V	--------
-8V	NJM7908A
-9V	NJM7909A
-10V	--------
-12V	NJM7912A
-15V	NJM7915A
-18V	NJM7918A
-20V	--------
-24V	NJM7924A

uPD71054GB-3B4 (NEC) FLAT PACKAGE

C-MOS PROGRAMMABLE TIMER COUNTER
– TOP VIEW –

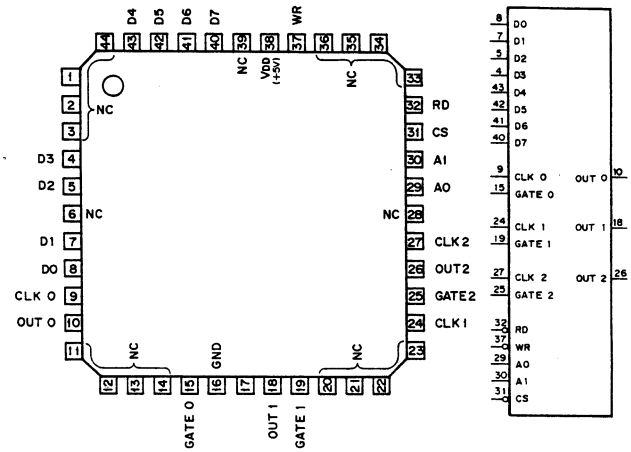

FUNCTION TABLE					
INPUTS					FUNCTION
CS	RD	WR	A1	A0	
0	1	0	0	0	COUNTER NO. 1 WRITE
0	1	0	0	1	COUNTER NO. 2 WRITE
0	1	0	1	0	COUNTER NO. 3 WRITE
0	1	0	1	1	CONTROL WORD WRITE
0	0	1	0	0	COUNTER NO. 1 READ
0	0	1	0	1	COUNTER NO. 2 READ
0	0	1	1	0	COUNTER NO. 3 READ
0	0	1	1	1	NO-OPERATION (HI-Z)
1	X	X	X	X	DISABLE (HI-Z)
0	1	1	X	X	NO-OPERATION (HI-Z)

A1,A0 ; SELECTED READ/WRITE OPERATION
CLK n ; COUNTER CLOCK INPUT n
CS ; CHIP SELECT
D7-D0 ; 8-BIT DATA I/O
GATE n; COUNTER GATE INPUT n
IC ; INTERNALLY CONNECTED
OUT n ; COUNTER CLOCK OUTPUT n
RD ; READ COUNTER/STATUS
WR ; WRITE COMMAND/DATA

0 ; LOW LEVEL
1 ; HIGH LEVEL
X ; DON'T CARE
HI-Z ; HIGH IMPEDANCE

uPD42101G-3 (NEC) FLAT PACKAGE

C-MOS 7K (910x8)-BIT FIFO MEMORY
– TOP VIEW –

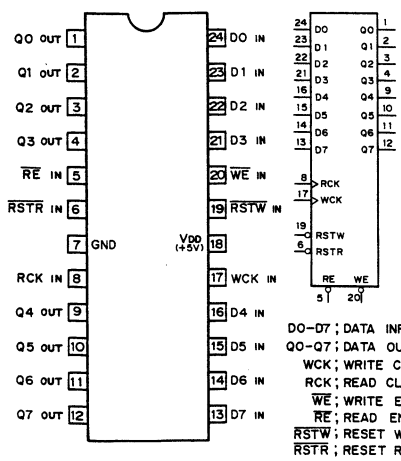

DO–D7 ; DATA INPUTS
QO–Q7 ; DATA OUTPUTS
WCK ; WRITE CLOCK INPUT
RCK ; READ CLOCK INPUT
$\overline{WE}$; WRITE ENABLE INPUT
$\overline{RE}$; READ ENABLE INPUT
$\overline{RSTW}$; RESET WRITE INPUT
$\overline{RSTR}$; RESET READ INPUT

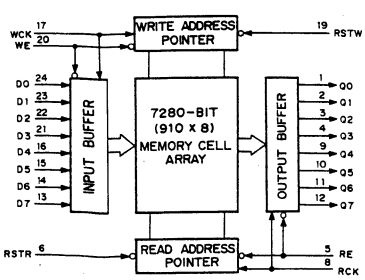

CONTROL WORD FORMAT

D7	D6	D5	D4	D3	D2	D1	D0
SC1	SC0	RWM1	RWM0	CM2	CM1	CM0	BCD

BCD : BINARY CODED DECIMAL

BCD	COUNTER OPERATION
0	16-BIT BINARY COUNT
1	4-FIGURE BCD COUNT

CM2	CM1	CM0	COUNTER MODE
0	0	0	MODE 0
0	0	1	MODE1
X	1	0	MODE 2
X	1	1	MODE 3
1	0	0	MODE 4
1	0	1	MODE 5

RWM1	RWM0	READ/WRITE MODE
0	0	COUNTER LATCHING CMD.
0	1	LSB ONLY
1	0	MSB ONLY
1	1	LSB FIRST THEN MSB

SC1	SC0	OPERATION
0	0	SELECTED COUNTER No.0
0	1	SELECTED COUNTER No.1
1	0	SELECTED COUNTER No.2
1	1	MULTIPLE LATCH COMMAND

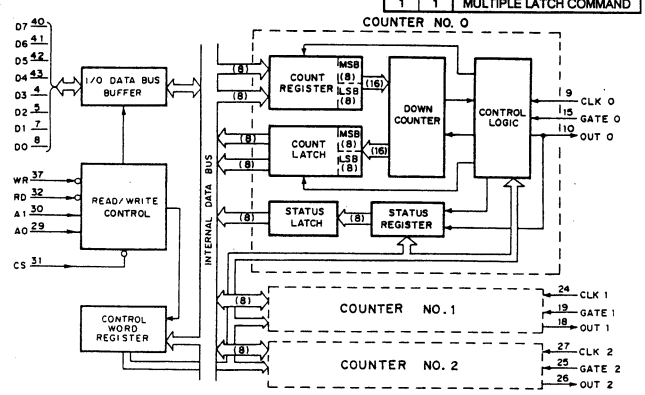

uPD78312CW (NEC)

C MOS 16/8 BIT ONE CHIP MICROCOMPUTER

- TOP VIEW -

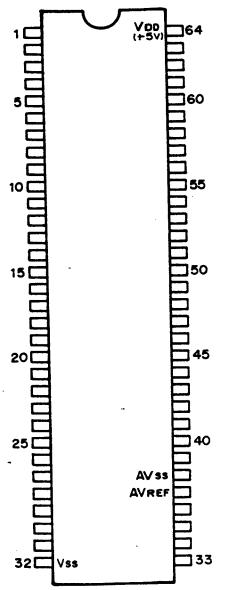

PIN NO	IN	OUT	SYMBOL	PIN NO	IN	OUT	SYMBOL
1	○	○	P00	33	○		AN0
2	○	○	P01	34	○		AN1
3	○	○	P02	35	○		AN2
4	○	○	P03	36	○		AN3
5	○	○	P04	37			AVREF
6	○	○	P05	38			AVss
7	○	○	P06	39	○	○	P34/PWM0
8	○	○	P07	40	○	○	P35/PWM1
9	○	○	P10	41	○	○	P36/CLR0/TO0
10	○	○	P11	42	○	○	P37/CLR1/TO1
11	○	○	P12	43	○	○	P50/A8
12	○	○	P13	44	○	○	P51/A9
13	○	○	P14	45	○	○	P52/A10
14	○	○	P15	46	○	○	P53/A11
15	○	○	P16	47	○	○	P54/A12
16	○	○	P17	48	○	○	P55/A13
17	○		P20/NMI	49	○	○	P56/A14
18	○		P21/INTE0	50	○	○	P57/A15
19	○		P22/INTE1	51	○		$\overline{EA}$
20	○		P23/INTE2	52	○		$\overline{RESET}$
21	○	○	P24/TxD	53		○	$\overline{RD}$
22	○	○	P25/RxD	54		○	$\overline{WR}$
23	○	○	P26/$\overline{SCK}$	55		○	ALE
24	○	○	P27/$\overline{CTS}$	56	○	○	P40/AD0
25		○	$\overline{RFSH}$	57	○	○	P41/AD1
26	○		P30/CI0	58	○	○	P42/AD2
27	○		P31/CTRL0	59	○	○	P43/AD3
28	○		P32/CI1	60	○	○	P44/AD4
29	○		P33/CTRL1	61	○	○	P45/AD5
30	○		X1	62	○	○	P46/AD6
31			X2	63	○	○	P47/AD7
32			Vss	64			VDD

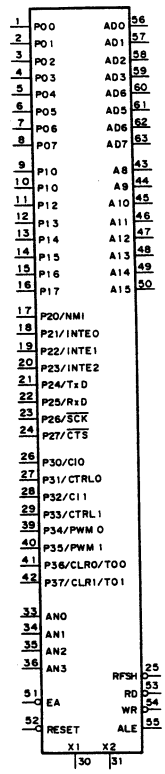


```
A8-A15      ; ADDRESS BUS OUT
AD0-AD7     ; ADDRESS/DATA BUS IN/OUT
ALE         ; ADDRESS LATCH ENABLE OUT
AN0-AN3     ; ANALOG SIGNAL IN
CI0,CI1     ; EXTERNAL COUNT CLOCK IN
CLR0,CLR1   ; COUNTER CLEAR/CAPTURE TRIGGER IN
CTRL0,CTRL1; COUNT UP/DOWN SELECT CONTROL IN
CTS         ; ASYNCHRONOUS MODE; TRANSMIT PERMISSION
                                 CONTROL IN
              I/O INTERFACE MODE; RECEIVER CLOCK IN/OUT
EA          ; EXTERNAL ACCESS IN
INTE0-INTE2; EXTERNAL INTERRUPT REQUEST IN
NMI         ; NON MASKABEL INTERRUPT REQUEST IN
P00-P07     ; PORT 0 (3 STATE) IN/OUT
P10-P17     ; PORT 1 (3 STATE) IN/OUT
P20-P27     ; PORT 2 (3 STATE) IN/OUT
P30-P37     ; PORT 3 (3 STATE) IN/OUT
PWM0,PWM1   ; PWM OUT
RD          ; READ STROBE OUT
RESET       ; RESET IN
RFSH        ; REFLESH OUT
RXD         ; SERIAL DATA OUT
SCK         ; I/O INTERFACE MODE; RECEIVER CLOCK OUT
TO0,TO1     ; PULSE OUT
TXD         ; SERIAL DATA IN
WR          ; WRITE STROBE OUT
X1,X2       ; CRYSTAL
```

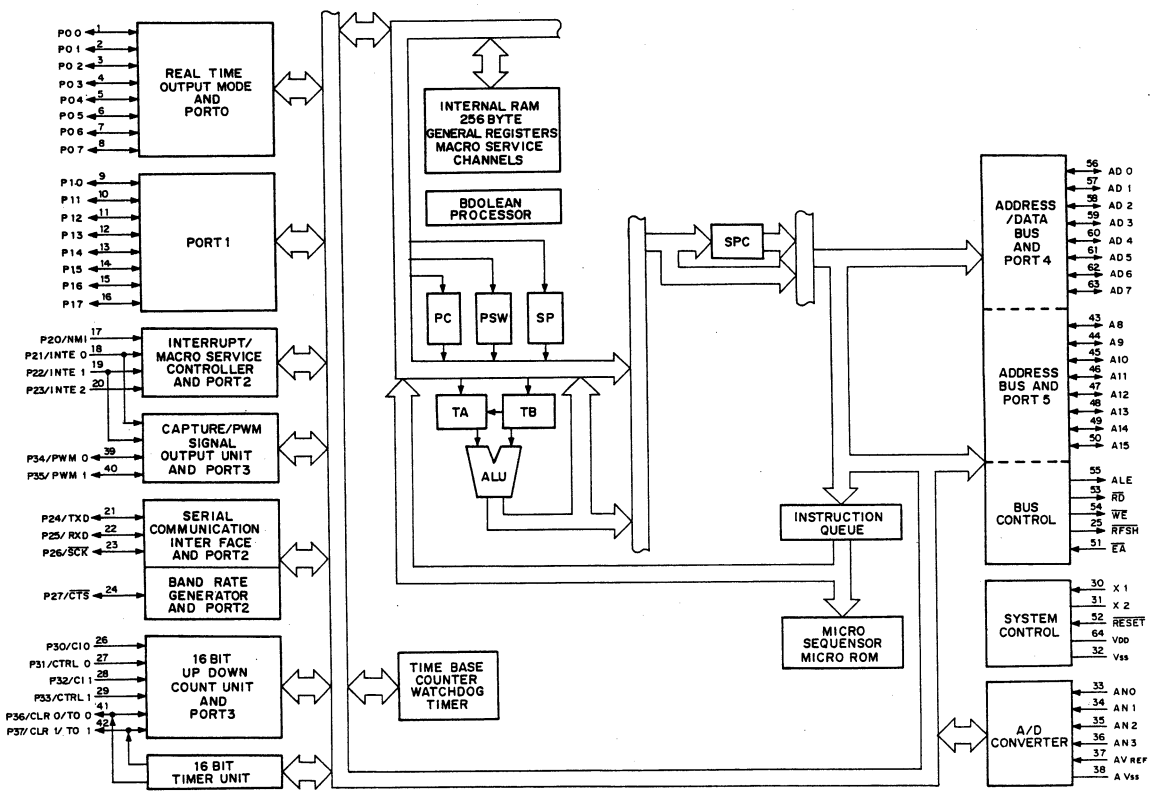

uPD78310CW (NEC)

C MOS 16/8 BIT ONE CHIP MICROCOMPUTER

- TOP VIEW -

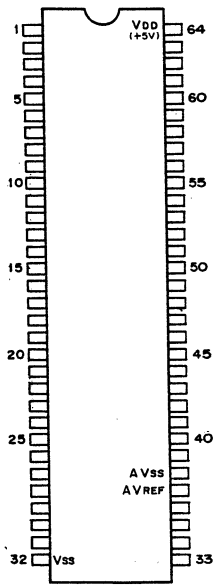

PIN NO	I N	OUT	SYMBOL	PIN NO	I N	OUT	SYMBOL
1	○	○	P00	33	○		AN0
2	○	○	P01	34	○		AN1
3	○	○	P02	35	○		AN2
4	○	○	P03	36	○		AN3
5	○	○	P04	37			AVREF
6	○	○	P05	38			AVss
7	○	○	P06	39	○	○	P34/PWM0
8	○	○	P07	40	○	○	P35/PWM1
9	○	○	P10	41	○	○	P36/CLR0/T00
10	○	○	P11	42	○	○	P37/CLR1/T01
11	○	○	P12	43	○	○	A8
12	○	○	P13	44	○	○	A9
13	○	○	P14	45	○	○	A10
14	○	○	P15	46	○	○	A11
15	○	○	P16	47	○	○	A12
16	○	○	P17	48	○	○	A13
17	○		P20/NMI	49	○	○	A14
18	○		P21/INTE0	50	○	○	A15
19	○		P22/INTE1	51	○		$\overline{EA}$
20	○		P23/INTE2	52	○		$\overline{RESET}$
21	○	○	P24/TxD	53		○	$\overline{RD}$
22	○	○	P25/RxD	54		○	$\overline{WR}$
23	○	○	P26/$\overline{SCK}$	55		○	ALE
24	○	○	P27/$\overline{CTS}$	56	○	○	AD0
25		○	$\overline{RFSH}$	57	○	○	AD1
26	○		P30/CI0	58	○	○	AD2
27	○		P31/CTRL0	59	○	○	AD3
28	○		P32/CI1	60	○	○	AD4
29	○		P33/CTRL1	61	○	○	AD5
30	○		X1	62	○	○	AD6
31			X2	63	○	○	AD7
32			Vss	64			VDD

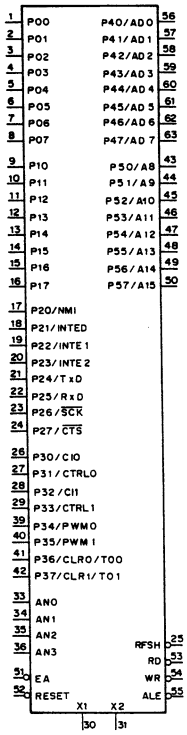


```
A8-A15      ; ADDRESS BUS OUT
AD0-AD7     ; ADDRESS/DATA BUS IN/OUT
ALE         ; ADDRESS LATCH ENABLE OUT
AN0-AN3     ; ANALOG SIGNAL IN
CI0,CI1     ; EXTERNAL COUNT CLOCK IN
CLR0,CLR1   ; COUNTER CLEAR/CAPTURE TRIGGER IN
CTRL0,CTRL1; COUNT UP/DOWN SELECT CONTROL IN
CTS         ; ASYNCHRONOUS MODE; TRANSMIT PERMISSION
                                 CONTROL IN
              I/O INTERFACE MODE; RECEIVER CLOCK IN/OUT
EA          ; EXTERNAL ACCESS IN
INTE0-INTE2; EXTERNAL INTERRUPT REQUEST IN
NMI         ; NON MASKABEL INTERRUPT REQUEST IN
P00-P07     ; PORT 0 (3 STATE) IN/OUT
P10-P17     ; PORT 1 (3 STATE) IN/OUT
P20-P27     ; PORT 2 (3 STATE) IN/OUT
P30-P37     ; PORT 3 (3 STATE) IN/OUT
P40-P47     ; PORT 4 (3 STATE) IN/OUT
P50-P57     ; PORT 5 (3 STATE) IN/OUT
PWM0,PWM1   ; PWM OUT
RD          ; READ STROBE OUT
RESET       ; RESET IN
RFSH        ; REFLESH OUT
RXD         ; SERIAL DATA OUT
SCK         ; I/O INTERFACE MODE; RECEIVER CLOCK OUT
T00,T01     ; PULSE OUT
TXD         ; SERIAL DATA IN
WR          ; WRITE STROBE OUT
X1,X2       ; CRYSTAL
```

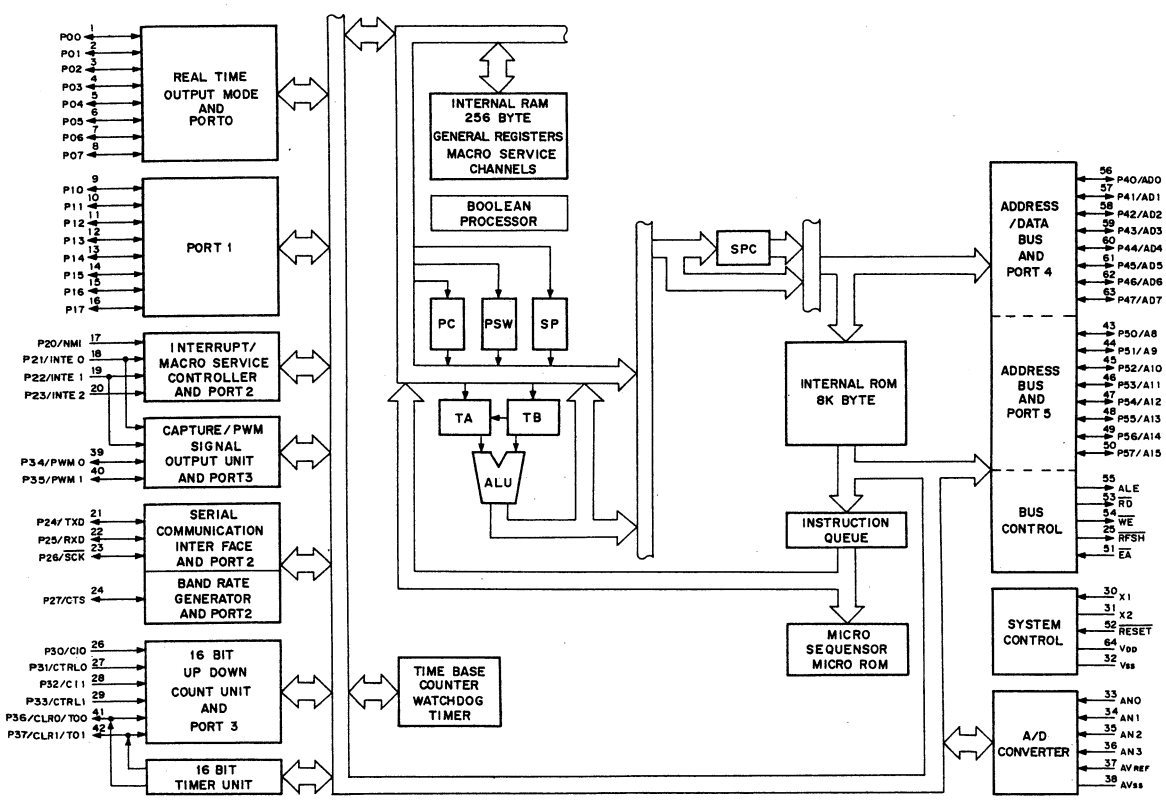

uPD8251AFC (NEC)

N-MOS PROGRAMMABLE COMMUNICATION INTERFACE

– TOP VIEW –

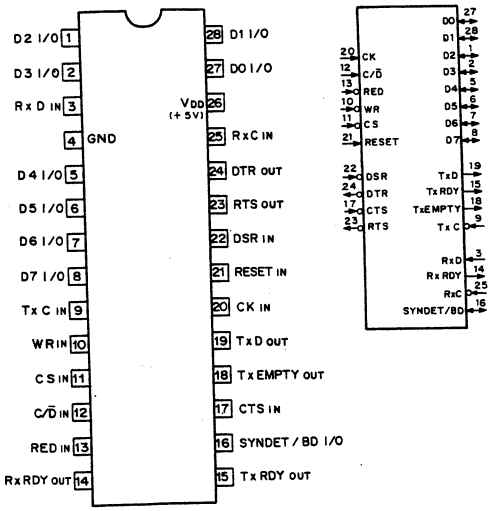

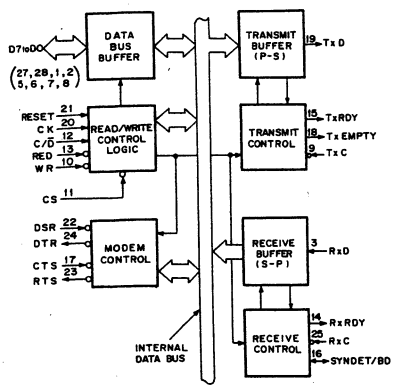

PIN NAMES

D0toD7	; DATA BUS
C/D	; CONTROL or DATA IS TO BE WRITTEN or READ
RED	; READ DATA COMMAND
WR	; WRITE DATA or CONTROL COMMAND
CS	; CHIP ENABLE
CK	; CLOCK PULSE
RESET	; RESET
TxC	; TRANSMITTER CLOCK
TxD	; TRANSMITTER DATA
RxC	; RECEIVER CLOCK
RxD	; RECEIVER DATA
RxRDY	; RECEIVER READY
TxRDY	; TRANSMITTER READY
DSR	; DATA SET READY
DTR	; DATA TERMINAL READY
SYNDET/BD	; SYNC DETECT/BREAK DETECT
RTS	; REQUEST TO SEND DATA
CTS	; CLEAR TO SEND DATA
TxEMPTY	; TRANSMITTER EMPTY

RANSISTOR, (OTHER)

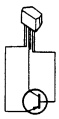

2SA1115

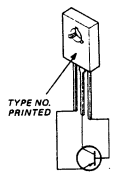

2SA1141
2SA1156
2SB649A
2SB731

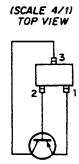

2SA1162G
2SA1162Y
2SA1226
2SA812

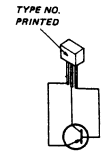

2SA1175

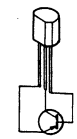

2SA1319

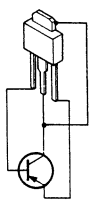

2SA1413

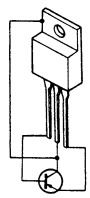

2SA473
2SA768

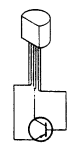

2SA733

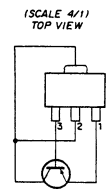

2SB1114
2SB1115A

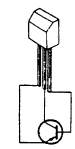

2SB733

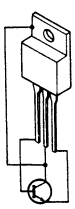

2SC1173
2SC2654

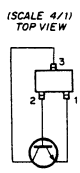

2SC1623
2SC2223
2SC2712G
2SC2712Y
2SC2715
2SC2757
2SC3326N

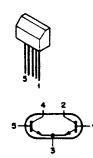

2SC2259

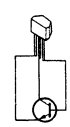

2SC2458
2SC2603
2SC403SP

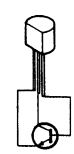

2SC2754
2SC2878

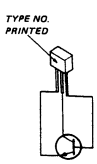

2SC2785E
2SC2785K

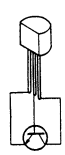

2SC2901

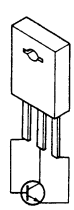

2SC3012

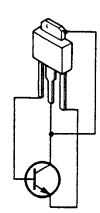

2SC3632

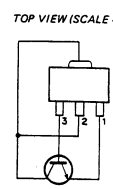

2SD1615A
2SD999

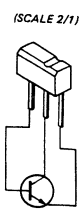

2SD1055

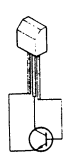

2SD773
2SD774-4

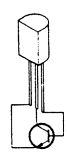

2SD788

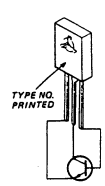

2SD809

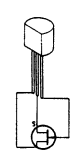

2SK152

TOP VIEW (SCALE 4/1)

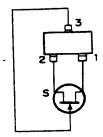

2SK209
2SK94-X3
2SK94-X4

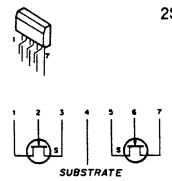

2SK389

TOP VIEW (SCALE 4/1)

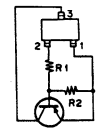

DTA114EK (R1 = 10K, R2 = 10K)
DTA114TK (R1 = 10K, R2 = ∞)
DTA124EK (R1 = 22K, R2 = 22K)
DTA144EK (R1 = 47K, R2 = 47K)
DTB123EK (R1 = 2.2K, R2 = 2.2K)

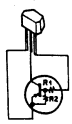

DTA124ES (R1 = 22K, R2 = 22K)
DTA124XS (R1 = 22K, R2 = 47K)

TOP VIEW (SCALE 4/1)

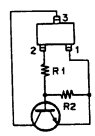

DTC114EK (R1 = 10K, R2 = 10K)
DTC124XK (R1 = 22K, R2 = 47K)
DTC144EK (R1 = 47K, R2 = 47K)
DTC144WK (R1 = 47K, R2 = 22K)

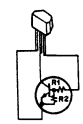

DTC124ES (R1 = 22K, R2 = 22K)
DTC124XS (R1 = 22K, R2 = 47K)
DTC144ES (R1 = 47K, R2 = 47K)

(SCALE 2/1)

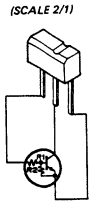

DTC144EF (R1 = 47K, R2 = 47K)

TOP VIEW

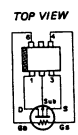

TX429M

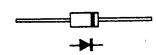

10E-2
1S2076
1SS119
1SS148
ERB44- ? ?

(SCALE 4/1) TOP VIEW

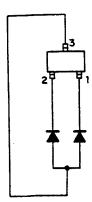

1S2835

(SCALE 4/1) TOP VIEW

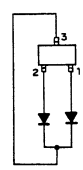

1S2837

(SCALE 4/1) TOP VIEW

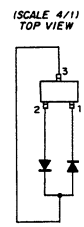

1SS123

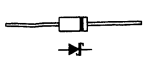

1SS97
1SS99

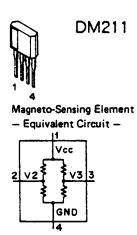

DM211

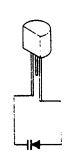

FC51M
FC52M
FC53M
FC54M

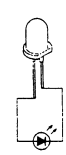

GL-5HD5 ; RED

IODE, (OTHER)

DUAL 7-SEGMENT LED
— TOP VIEW —

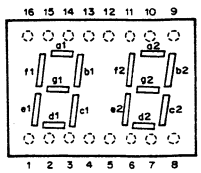

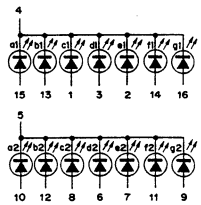

LB402VK (ROHM)

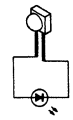

LN25RP ; RED
LN35BP ; GREEN

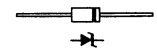

HZ ?A ?L
HZ ?ALL
HZ ?C ?L
RD ? ?EB ?
RD ? ?ESB ?

(SCALE 4/1)
TOP VIEW

RD ? ?M-B ?

(SCALE 2/1)

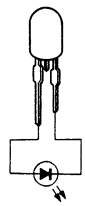

TLG256 ; GREEN
TLY256 ; YELLOW

TLUG154 ; GREEN

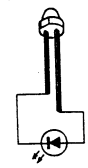

TLUR144 ; RED

The circuit diagram of each IC is obtained from the IC data book published by the manufacturer.

SECTION 19
SPARE PARTS AND FIXTURE

19-1. PARTS INFORMATION

1. The shaded and ⚠-marked components are critical so safety.
   Replace only with the same components as specified.

2. Replacement parts supplied from the Sony Parts Center will sometimes have a different shape and outside view from the parts which are used in the unit. This is due to "accommodating improved parts and/or engineering changed" or "standardization of genuine parts".
   - This manual's exploded views and electrical spare parts lists indicate the part numbers of "the present standardized genuine parts".
   - Regarding engineering part changes by our engineering department, refer to Sony service bulletins and service manual supplements.

3. The parts marked with "s" in the SP column of the exploded views and electrical spare parts lists are normally stocked for replacement purposes. The parts marked with "o" in the SP column are not normally required for routine service work. Orders for parts marked with "o" will be processed, but allow for additional delivery time.

4. Items with no part number and/or no description are not stocked because they are seldom required for routine service.

5. (T) after a spring description is shown on the exploded views in order to indicate the number of spring turns required for the use.
   (example)
   Spring, tension (24T); this spring must be cut at its 24th turn for actual use.

19-2. EXPLODED VIEW

- Exploded views are composed of the following blocks.

1. Supply Side Reel Chassis
   supply reel table
   supply motor plate
   reel motor
   reel drive motor
   cassette detector

2. Take-up Side Reel Chassis
   take-up reel table
   take-up motor plate
   reel motor
   cassette detector

3. Head Drum, Stationary Heads and Tape Guides Block
   head drum ass'y
   CTL head
   full erase head
   audio/TC heads
   audio confidence heads
   tape guide
   capstan motor
   slip ring

4. Threading Ring Block
   threading ring
   pinch roller
   tape guide
   ring sensor

5. T Drawer Arm Block
   T drawer arm
   tape beginning sensor

6. Supply Tension Regulator Block
   supply tension regulator

7. Pinch Press Mechanism Block
   pinch press mechanism

8. Gear Box Block
   gear box

9. Function Control Chassis Block
   function control chassis
   sub function control panel
   search dial
   hinge

10. Level Control Chassis Block
    level control chassis
    audio level meter

11. Cassette-up Compartment Block
    cassette-up compartment

12. Connector Panel Block
    connector panel
    ventilation fun

13. Switching Regulator Block
    switching regulator
    AC inlet
    ventilation fun

14. Printed Circuit Board Block (1)
    printed circuit board
    PCB guide
    shield plate

15. Printed Circuit Board Block (2)
    printed circuit board

16. Ornamental Panel Block
    level control panel
    function control panel
    side panel
    top panel
    bottom panel

REEL CHASSIS(1)

No.	Part No.	SP	Description
1	1-622-599-11	o	PRINTED CIRCUIT BOARD, PTC-21
2	3-717-221-01	o	BRACKET, PTC-21
3	3-717-400-01	s	GEAR, CRANK FLAT
4	3-717-205-01	o	HOLDER (B), SHAFT
5	3-717-222-01	s	CAP (L), CS SHAFT
6	A-6737-174-A	s	PLATE (S) ASS'Y, MOTOR
7	1-454-417-41	s	SOLENOID, PLUNGER
8	3-717-230-01	o	BRACKET, LIMITER
9	X-3717-204-1	o	ARM (B) ASS'Y, CRANK
10	3-701-506-01	s	SET SCREW, DOUBLE POINT 3 x 4
11	3-717-266-01	o	CAP (S), CG SHAFT
12	3-535-532-01	s	SPRING TENSION
13	A-6741-066-A	o	BRAKE ASS'Y
14	3-648-217-00	o	SPRING TENSION
15	X-3717-205-1	s	LINING ASS'Y
16	3-307-381-00	s	SPRING, TENSION
17	X-3717-207-1	s	TABLE ASS'Y, REEL
18	3-717-232-01	o	SHAFT, FITTING, MR SENSOR
19	1-622-606-11	o	PRINTED CIRCUIT BOARD, DE-15
20	3-717-233-01	o	BRACKET, DE-15
21	3-717-450-01	o	ARM, BRAKE RELEASE
22	3-717-231-01	o	HOLDER, LIMITER
23	3-491-247-00	s	SPRING, COMPRESSION
24	3-717-223-01	s	SHAFT, SLIDE
25	3-717-218-01	o	LEVER, MR
26	4-880-426-00	o	SPRING, COMPRESSION
27	1-622-600-11	o	PRINTED CIRCUIT BOARD, PTC-23
28	3-717-462-01	o	HOLDER, REC INHIBIT
29	3-717-224-01	s	RETAINER, SHAFT, SLIDE
30	3-717-208-01	o	HOLDER (A), SHAFT
31	3-717-399-01	s	WHEEL, W
32	X-3717-202-1	o	ARM ASS'Y, CRANK
33	3-717-207-01	o	COVER, M/C DETECTION HOLDER
34	3-717-206-01	s	LEVER, M/C DETECTION
35	3-554-202-00	o	SPRING, COMPRESSION
36	3-717-426-01	s	HOLDER, M/C DETECTION
37	1-622-601-11	o	PRINTED CIRCUIT BOARD, PTC-36
38	1-622-598-11	o	PRINTED CIRCUIT BOARD, PTC-20
39	3-717-398-01	o	TABLE, SLIDE
40	3-717-211-01	o	SHAFT, WORM
41	3-717-213-01	o	WASHER (A), WORM
42	3-717-212-01	o	WASHER (B), WORM
43	3-659-324-00	s	SPRING, COMPRESSION
44	3-717-210-01	s	WORM
45	3-717-214-01	o	BEARING, WORM
46	A-6737-173-A	o	MOTOR ASS'Y, REEL DRIVING
47	8-835-179-01	s	MOTOR, DC MCB2B15
48	3-717-220-01	o	PULLEY (S), TIMING
49	3-717-219-01	o	BRACKET, MOTOR
50	X-3717-201-1	o	PULLEY (L) ASS'Y, TIMING
51	3-717-542-01	s	BELT, TIMING
52	A-6737-175-A	s	MOTOR ASS'Y, REEL
53	3-675-826-00	o	COVER, SHIELD, RM
54	1-559-907-11	o	WIRE, FLEXIBLE CARD
55	1-622-605-11	o	PRINTED CIRCUIT BOARD, RM-40
56	3-701-441-01	s	WASHER, POLY 4MM DIA. 0.13T
	3-701-441-11	s	WASHER, POLY 4MM DIA. 0.25T
	3-701-441-21	s	WASHER, POLY 4MM DIA. 0.5T
57	3-717-625-01	s	SPACER

Supply Side Reel Chassis

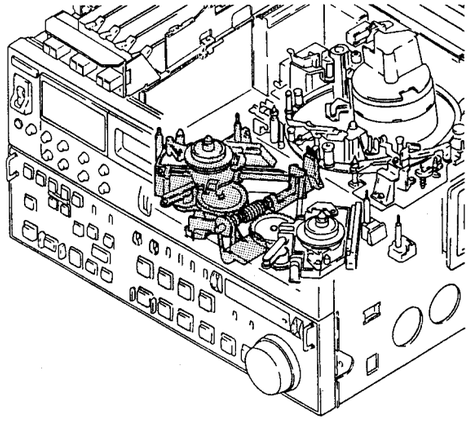

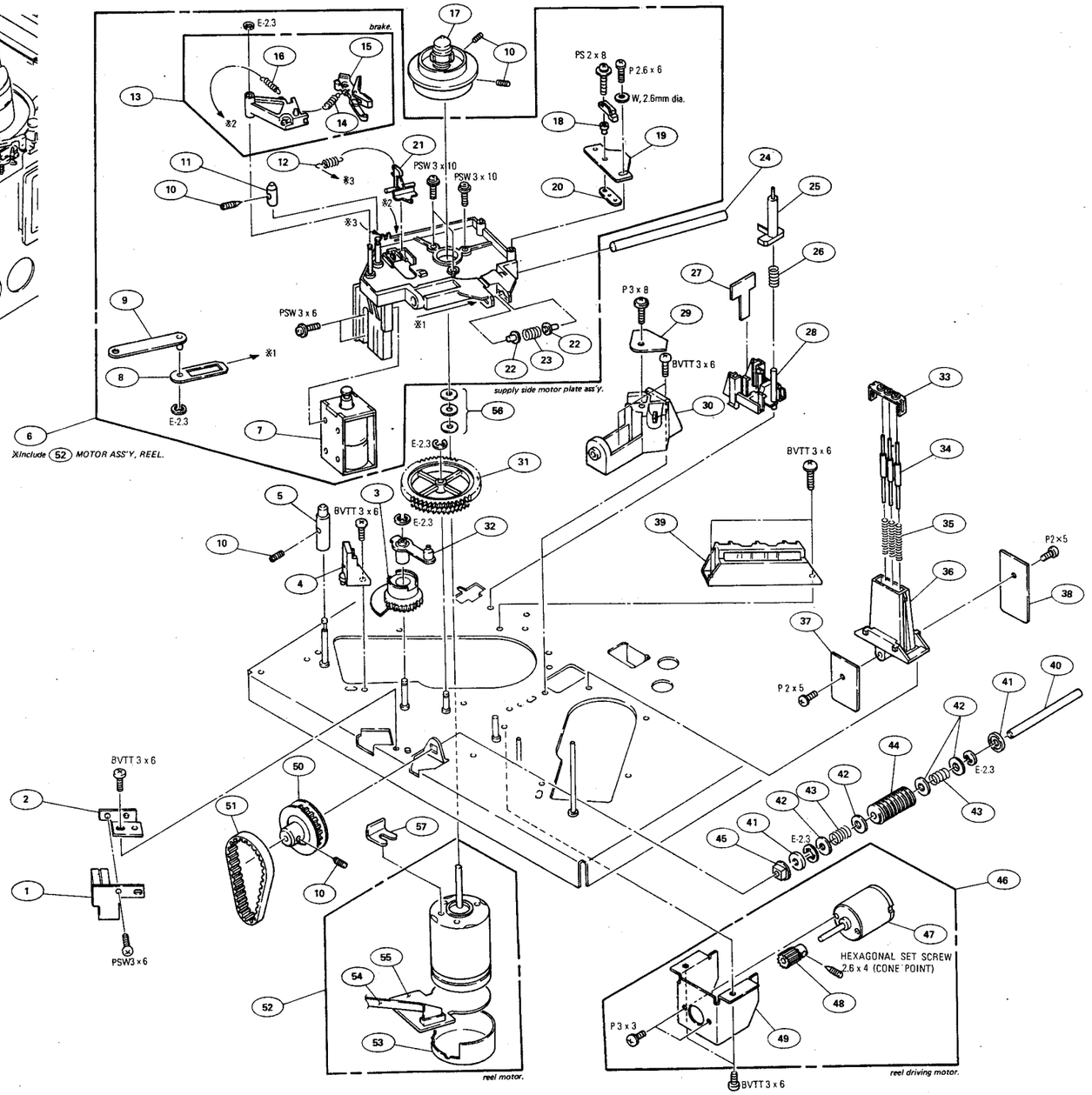

Take-up Side Reel Chassis

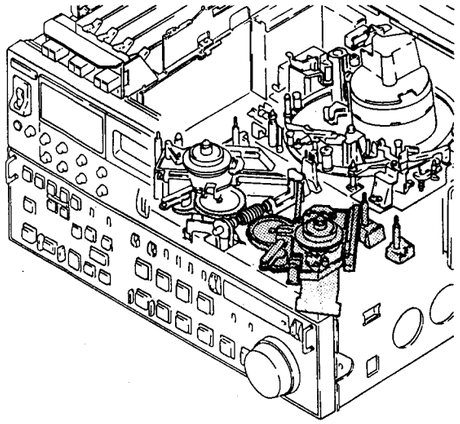

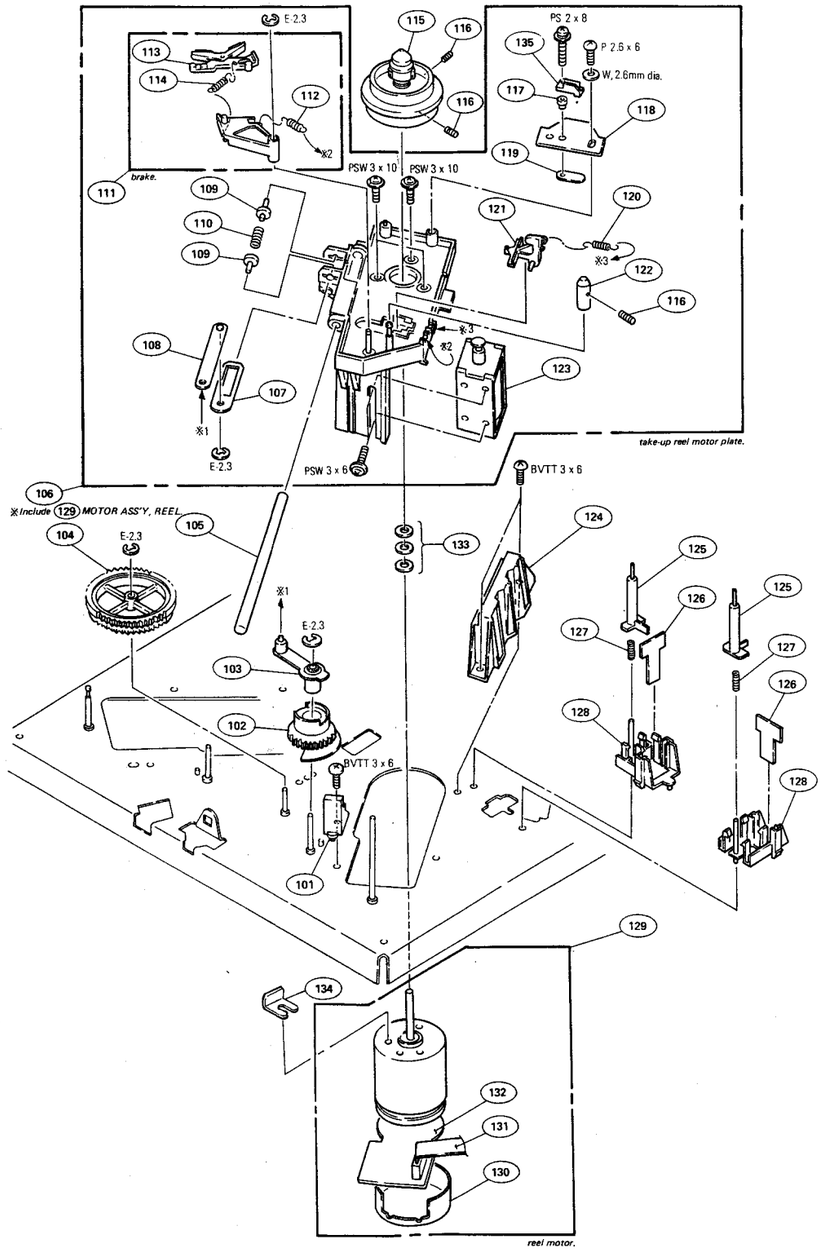

No.	Part No.	SP	Description
101	3-717-205-01	o	HOLDER (B), SHAFT
102	3-717-400-01	s	GEAR, CRANK FLAT
103	X-3717-202-1	o	ARM ASS'Y, CRANK
104	3-717-399-01	s	WHEEL, W
105	3-717-223-01	s	SHAFT, SLIDE
106	A-6737-176-A	s	PLATE (T) ASS'Y, MOTOR
107	3-717-230-01	o	BRACKET, LIMITER
108	X-3717-204-1	o	ARM (B) ASS'Y, CRANK
109	3-717-231-01	o	HOLDER, LIMITER
110	3-491-247-00	s	SPRING, COMPRESSION
111	A-6741-066-A	o	BRAKE ASS'Y
112	3-307-381-00	s	SPRING, TENSION
113	X-3717-205-1	s	LINING ASS'Y
114	3-648-217-00	o	SPRING, TENSION
115	X-3717-207-1	s	TABLE ASS'Y, REEL
116	3-701-506-01	s	SET SCREW, DOUBLE POINT 3 x 4
117	3-717-232-01	o	SHAFT, FITTING , MR SENSOR
118	1-622-606-11	o	PRINTED CIRCUIT BOARD, DE-15
119	3-717-233-01	o	BRACKET, DE-15
120	3-535-532-01	s	SPRING, TENSION
121	3-717-450-01	o	ARM, BRAKE RELEASE
122	3-717-266-01	o	CAP (S), CG SHAFT
123	1-454-417-41	s	SOLENOID, PLUNGER
124	3-717-398-01	o	TABLE, SLIDE
125	3-717-218-01	o	LEVER, MR
126	1-622-600-11	o	PRINTED CIRCUIT BOARD, PTC-23
127	4-880-426-00	o	SPRING, COMPRESSION
128	3-717-462-01	o	HOLDER, REC INHIBIT
129	A-6737-175-A	s	MOTOR ASS'Y, REEL
130	3-675-826-00	o	COVER, SHIELD, RM
131	1-559-907-11	o	WIRE, FLEXIBLE CARD
132	1-622-605-11	o	PRINTED CIRCUIT BOARD, RM-40
133	3-701-441-01	s	WASHER. POLY 4MM DIA. 0.13T
	3-701-441-11	s	WASHER. POLY 4MM DIA. 0.25T
	3-701-441-21	s	WASHER. POLY 4MM DIA. 0.5T
134	3-717-625-01	s	SPACER
135	1-807-683-11	s	RESISTOR ELEMENT

No.	Part No.	SP	Description
201	8-835-259-02	s	MOTOR, DC BHF-1918A
202	A-6736-062-A	s	HEAD ASS'Y, FE
203	3-717-402-01	o	DECK, FE
204	8-825-770-72	s	HEAD, FE EF291-21
205	1-543-316-21	s	HEAD, SENSING (SMALL TYPE)
206	2-279-715-01	s	RIVET, NYLON
207	3-717-272-01	o	HOLDER, S SENSOR
208	A-6746-027-C	s	ROLLER (TG 1N) ASS'Y, TAPE
209	A-6736-061-A	o	HEAD ASS'Y CTL
210	3-642-719-00	o	SPACER (2.6 X 11)
211	3-738-730-01	s	SPRING, COMPRESSION
212	3-717-522-01	o	BASE, CTL HEAD
213	3-675-842-00	o	PLATE, ADJUSTMENT, CTL
214	8-825-554-73	s	HEAD, CTL PS244-21A
215	A-6736-091-A	o	HEAD ASS'Y AU
216	3-738-725-01	o	PLATE, ADJUSTMENT, AT HEAD
217	3-738-734-01	o	DECK, AT
218	3-738-733-01	o	PLATE, CF
219	3-738-731-01	o	PLATE, RP
220	3-717-521-01	o	CASE, SHIELD, CF
221	3-738-732-01	o	CASE (1), SHIELD, AT
222	8-825-771-11	s	HEAD AUDIO CONFI. PS244-2103C
223	3-703-502-41	s	SCREW
224	8-825-623-21	s	HEAD EPS244-2103B
225	3-717-237-01	o	CASE (2), SHEILD, AT
226	3-738-724-01	o	BRACKET, ADJUSTMENT PLATE
227	3-680-839-01	o	LEVER (2), C
228	3-542-475-00	s	SPRING, TENSION
229	3-703-074-00	s	CAP 3, SHAFT
230	X-3675-854-1	o	LEVER ASS'Y, C
231	3-140-263-XX	s	SPRING, TENSION (23T)
232	X-3675-858-1	s	ROLLER SUB ASS'Y, C
233	1-454-372-11	s	SOLENOID, PLUNGER
234	4-879-762-00	s	SPRING, COMPRESSION
235	3-655-966-00	s	SPACER, STEP
236	3-650-312-00	s	BEARING, BALL (NO FLANGE)
237	3-703-075-00	s	CAP 2, SHAFT
238	3-717-131-01	o	COVER, BRUSH
239	A-6050-645-A	s	BRUSH ASS'Y
240	A-6050-649-A	s	RING ASS'Y, SLIP
242	3-683-825-01	s	SCREW (M3 x 10)
243	A-6762-440-A	s	UPPER DRUM ASS'Y, WITHOUT PA-110 BOARD DBR-18-R
244	3-683-828-01	s	SPACER, FLANGE (T=0.01MM)
	3-683-828-11	s	SPACER, FLANGE (T=0.03MM)
	3-683-828-21	s	SPACER, FLANGE (T=0.1MM)
245	1-586-633-00	s	DETECTOR, DEW
246	3-655-631-00	o	TERMINAL, GROUND
247	3-675-701-00	o	TERMINAL BOARD
248	3-675-739-00	o	SPACER, INSULATING (2)
249	3-717-523-01	o	PLATE, SHIELD, CF
250	A-6050-712-A	s	HEAD DRUM ASS'Y, DBH-18A-R
251	2-236-956-00	s	SCREW, STEP
252	A-6762-439-A	s	UPPER DRUM ASS'Y WITH PA-110 BOARD DBR-18A-R

Head Drum,Stationary Heads and Tape Guides Block

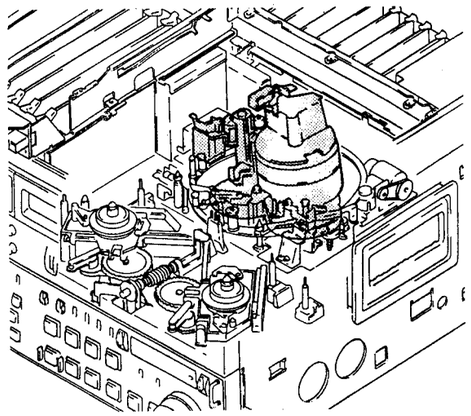

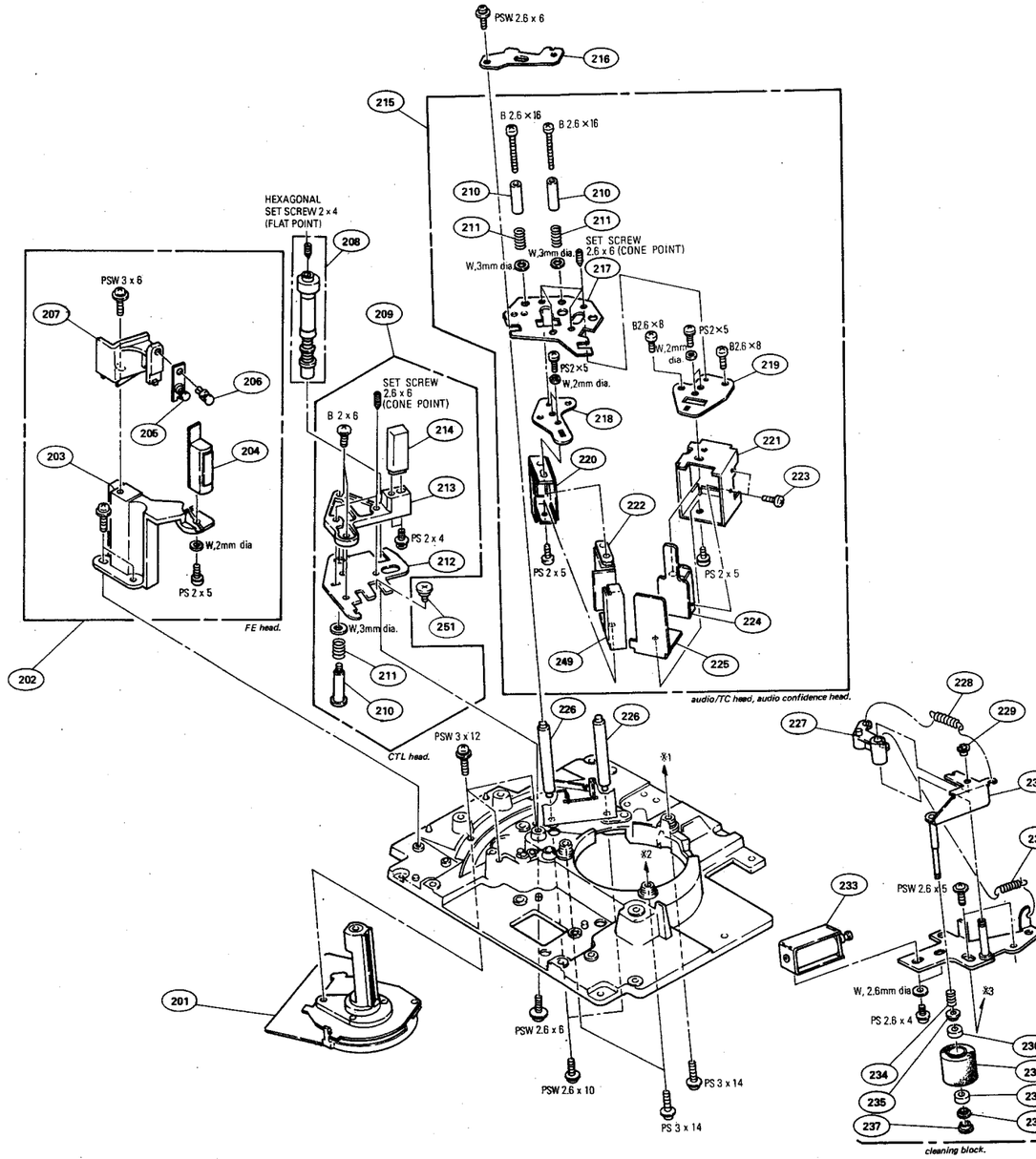

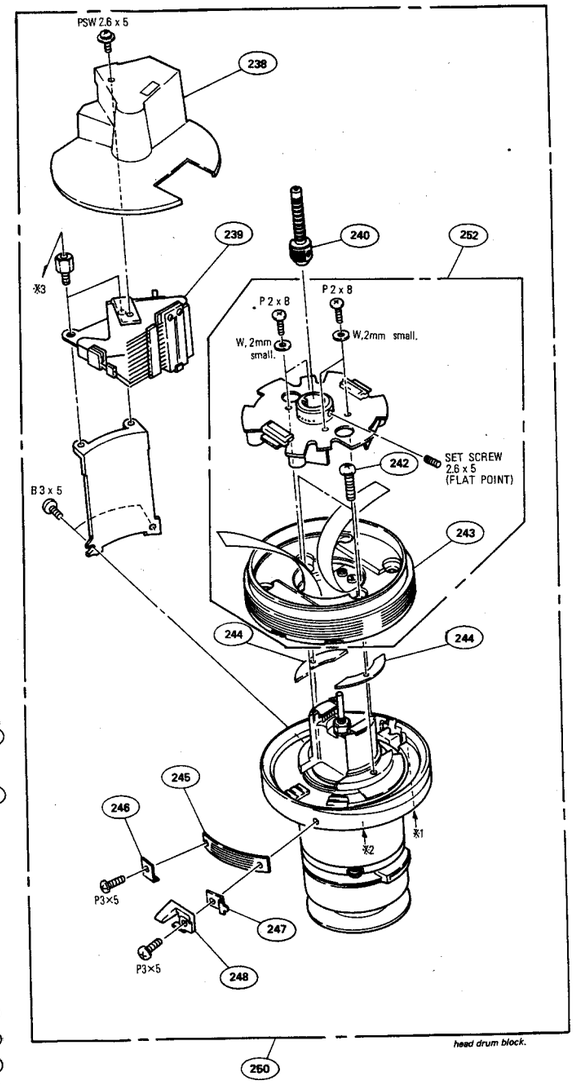

Threading Ring Block

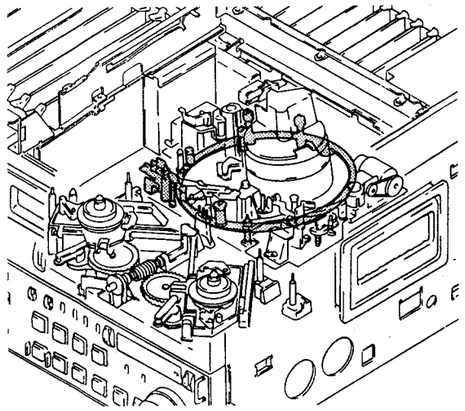

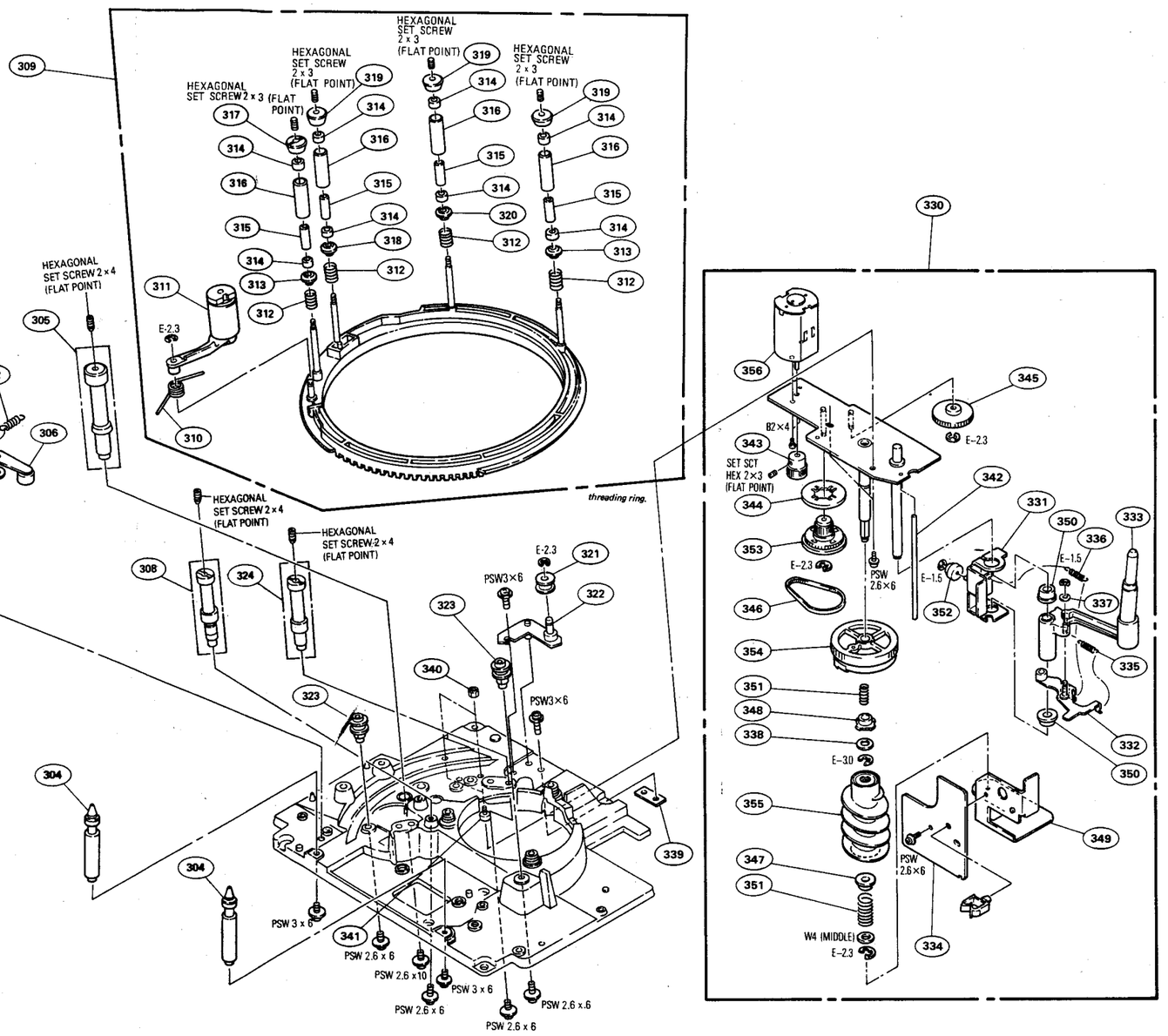

No.	Part No.	SP	Description
301	X-3717-210-1	o	BRACKET ASS'Y, RING SENSOR
302	3-533-373-00	s	SPRING, TENSION
303	X-3717-211-1	o	LEVER ASS'Y, TH END
304	3-717-242-01	o	SHAFT, CG
305	A-6746-030-C	s	ROLLER (TG4) ASS'Y, TAPE
306	X-3717-212-1	o	LEVER ASS'Y, TH.B END
307	1-622-597-11	o	PRINTED CIRCUIT BOARD, PTC-15
308	A-6746-028-C	s	ROLLER (TG2) ASS'Y, TAPE
309	A-6750-214-D	o	RING ASS'Y, LOADING
310	3-717-268-01	s	SPRING
311	X-3717-215-3	s	ARM ASS'Y, PINCH ROLLER
312	3-637-331-00	s	SPRING, COMPRESSION (L)
313	3-680-812-00	s	FLANGE, LOWER
314	3-650-312-00	s	BEARING, BALL (NO FLANGE)
315	3-680-809-00	s	RETAINER, BEARING
316	3-680-810-00	s	ROLLER
317	3-717-269-01	s	FLANGE, PRECEDING GUIDE
318	3-717-270-01	s	FLANGE (A), LOWER
319	3-717-267-01	s	FLANGE, UPPER
320	3-717-271-01	s	FLANGE (B), LOWER
321	3-675-866-00	o	ROLLER, RING
322	X-3717-391-1	o	ROLLER (B) SUB ASS'Y, RING
323	X-3675-809-0	o	ROLLER (A) ASS'Y, RING
324	A-6746-029-D	s	ROLLER (TG3) ASS'Y, TAPE
330	A-6746-059-A	o	GUIDE ASSY, MT
331	X-3717-386-1	o	PLATE SUB ASSY, SLIDE
332	X-3717-388-1	s	DISK ASSY
333	X-3717-389-2	s	ARM ASSY, SLANT GUIDE
334	1-635-443-11	o	PRINTED CIRCUIT BOARD, PTC-40
335	3-541-235-11	s	SPRING, TENSION
336	3-674-402-00	s	SPRING, TENSION
337	3-701-437-11	s	WASHER, POLY 2MM DIA, 0.25T
338	3-701-441-11	s	WASHER, POLY 4MM DIA, 0.25T
339	3-738-727-01	o	NUT, PLATE
340	3-738-728-01	o	NUT, BOSS FITTING
341	3-738-729-01	o	BOSS MTG FITTING
342	3-738-744-01	o	SHAFT, STOPPER
343	3-738-745-01	o	PULLEY (SMALL), TIMING
344	3-738-746-01	o	FLANGE, PULLEY
345	3-738-747-01	o	GEAR, MIDWAY
346	3-738-748-01	o	BELT (70TN10), TIMING
347	3-738-749-01	o	STOPPER (B), SPRING
348	3-738-750-01	o	STOPPER (A), SPRING
349	3-738-751-01	o	BRACKET, SENSOR
350	3-738-752-01	s	SPACER
351	3-738-753-01	s	SPRING, COMPRESSION
352	3-738-754-01	s	ROLLER
353	3-738-781-01	o	PULLEY (LARGE), TIMING
354	3-738-782-01	o	CAM
355	3-738-783-01	o	SPIRAL
356	8-835-122-01	s	MOTOR, DC (DNR-5900B)

No.	Part No.	SP	Description
401	3-717-524-01	o	BRACKET, T ROLLER ASS'Y
402	X-3717-224-1	o	BASE ASS'Y, T ROLLER
403	2-618-901-00	o	SPRING
404	3-717-293-01	s	FLANGE, LOWER
405	3-650-312-00	s	BEARING, BALL (NO FLANGE)
406	3-717-294-01	o	RETAINER, BEARING
407	3-717-292-01	s	ROLLER, GUIDE
408	3-717-267-01	s	FLANGE, UPPER
409	1-543-316-21	s	HEAD, SENSING (SMALL TYPE)
410	2-279-715-01	s	RIVET, NYLON
411	3-717-537-01	o	HOLDER, SENSOR
412	X-3717-222-1	s	GUIDE ASS'Y, SLANT
413	3-717-284-01	o	SPRING (SLANT GUIDE)
414	3-717-407-03	s	RETAINER, PINCH
415	3-717-536-01	o	SLIDER
416	X-3717-223-1	o	PLATE ASS'Y, ADJUSTMENT, SLANT
417	X-3717-250-2	o	GEAR (1) ASS'Y, T
418	A-6746-047-D	s	DRAWER ASS'Y, T
419	3-717-406-01	o	GEAR (2), T
420	3-717-300-01	o	SPRING (T GEAR 2)
421	X-3717-239-1	o	ARM ASS'Y, T
422	3-717-299-01	o	SPRING
423	3-717-283-01	o	ROLLER (2)
424	X-3717-221-1	o	PLATE ASS'Y, ADJUSTMENT

T Drawer Arm Block

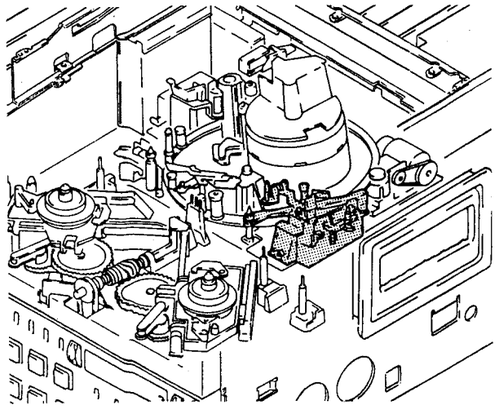

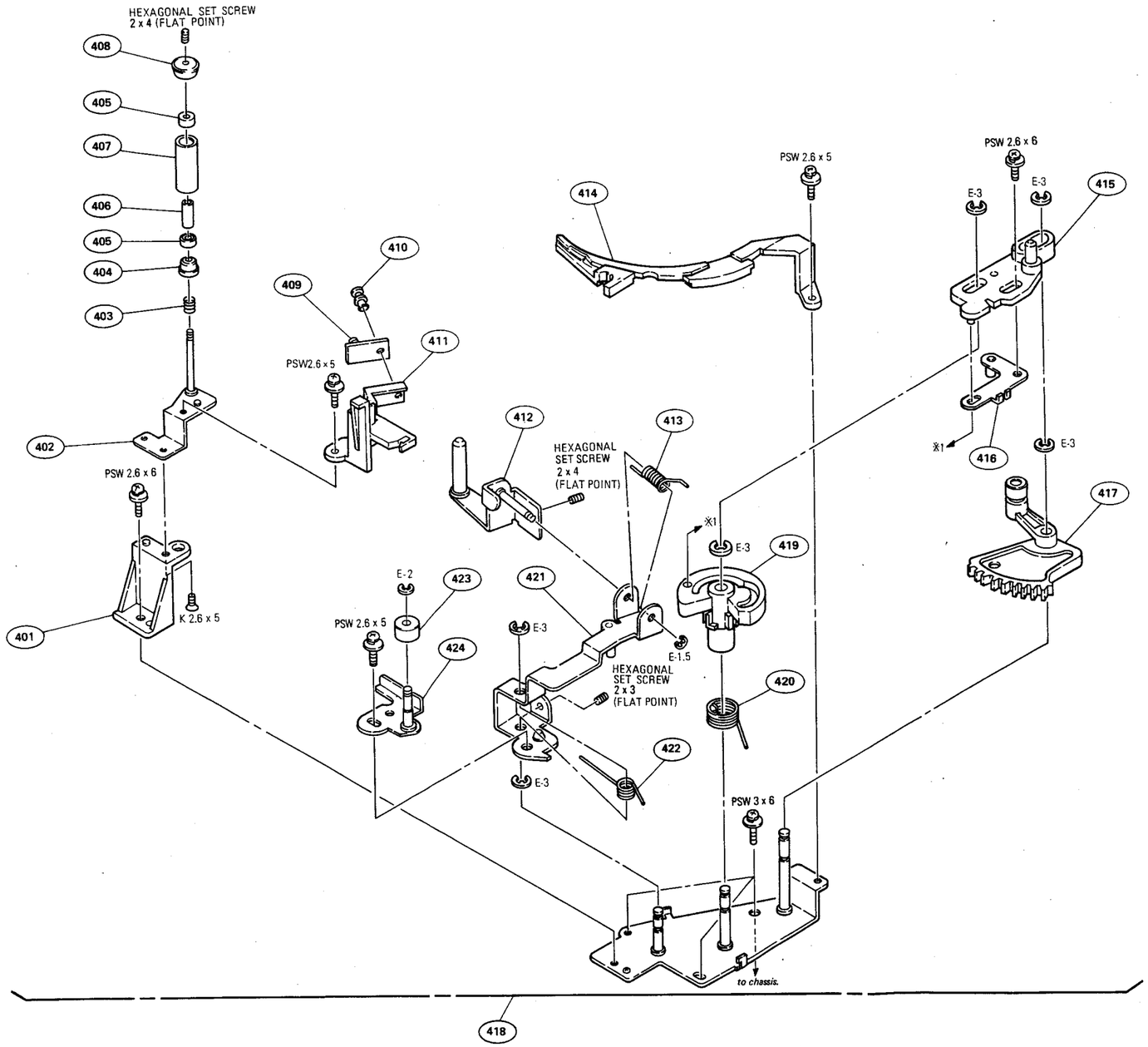

Supply Tension Regulator Block

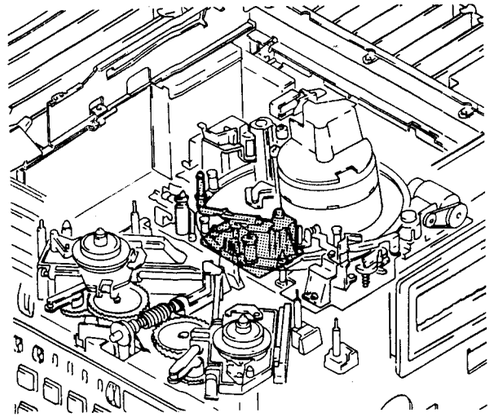

SUPPLY TENSION REGULATOR

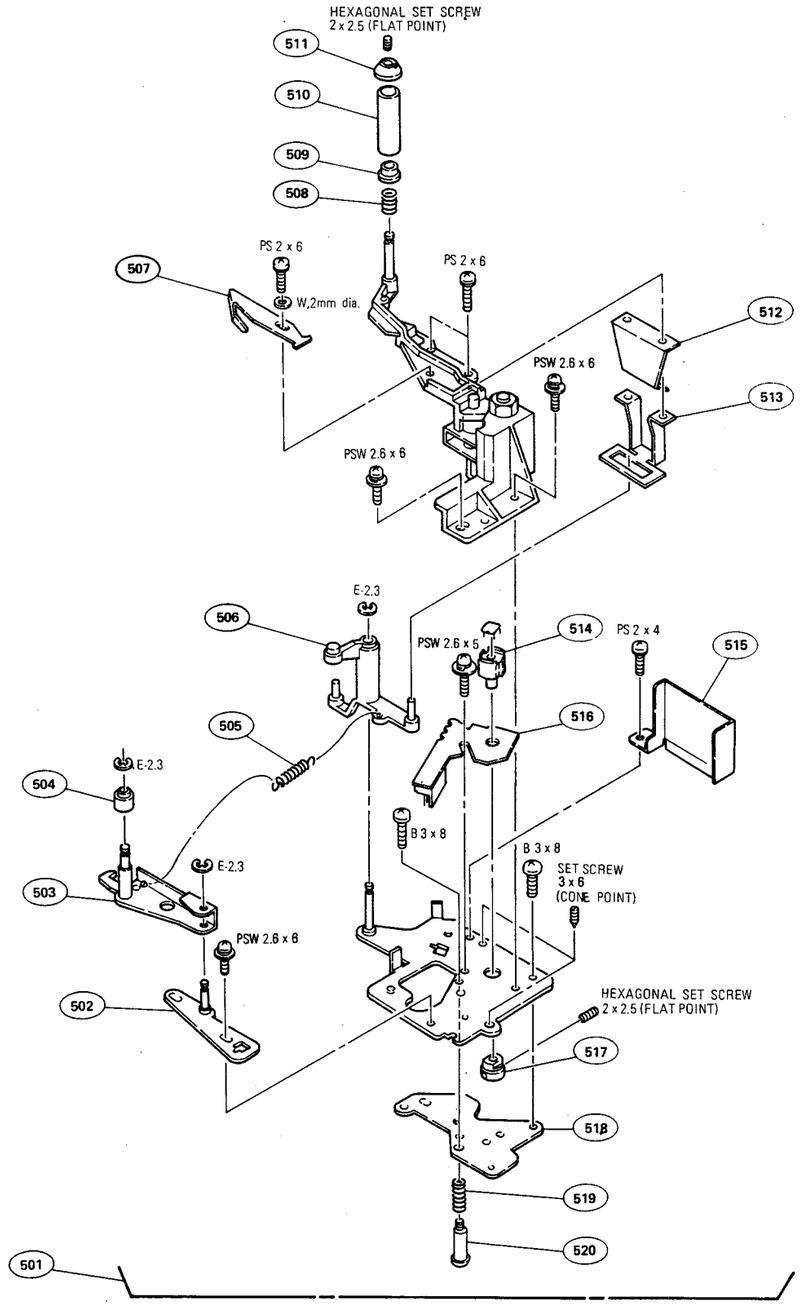

No.	Part No.	SP	Description
501	A-6742-061-A	s	ARM ASS'Y, S TENSION
502	X-3717-219-1	o	HOOK ASS'Y, TENSION REGULATOR
503	X-3717-220-1	o	ARM ASS'Y, TENSION REGULATOR
504	3-717-253-01	s	ROLLER
505	3-680-860-01	s	SPRING, TENSION (POWER TENSION)
506	X-3717-218-1	o	ARM ASS'Y, RETURN
507	3-717-277-02	o	PLATE, ADJUSTMENT, RETURN
508	2-618-901-00	o	SPRING
509	3-677-749-03	s	RETAINER, B
510	X-3675-851-0	s	ROLLER ASS'Y, TR
511	3-677-752-00	s	NUT, ADJUSTMENT, T
512	3-675-872-00	o	SPRING, LEAF
513	3-717-276-01	o	PROTECTOR
514	3-680-830-01	s	HOLDER, DME
515	3-675-885-02	o	PLATE, SHIELD, T-DME
516	1-611-279-13	o	PRINTED CIRCUIT BOARD, TR-18
517	3-680-831-00	o	COLLAR, DME
518	3-717-278-01	o	BRACKET, TR
519	3-653-350-00	s	SPRING, COMPRESSION
520	3-437-173-02	o	SCREW, HEAD ADJUSTING

No.	Part No.	SP	Description
601	A-6749-117-C	o	PRESS ASS'Y, PINCH
602	1-454-338-00	s	SOLENOID, PLUGER
603	3-717-249-01	o	STOPPER, P
604	1-622-596-11	o	PRINTED CIRCUIT BOARD, PD-35
605	3-717-250-02	o	SHAFT, JOINT, P
606	3-717-248-01	o	SPRING
607	3-717-247-01	o	LIMITER, P
608	3-653-382-01	o	SPACER (4 x 25)
609	3-717-246-01	o	LEVER, PRESS, P
610	3-537-674-03	s	SPRING, TENSION
611	3-701-441-21	s	WASHER POLY, 4MM DIA. 0.5T

Pinch Press Mechanism Block

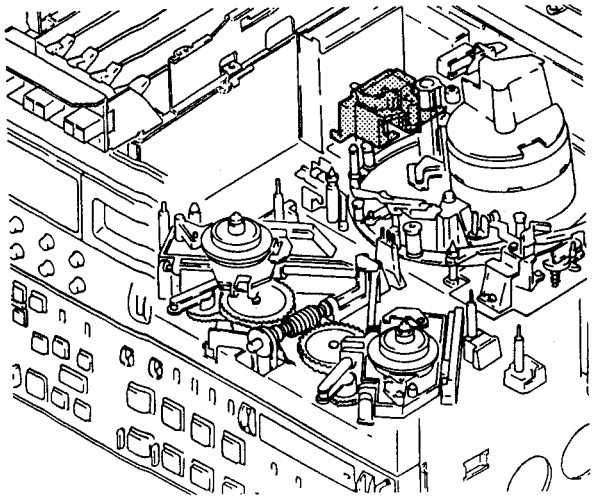

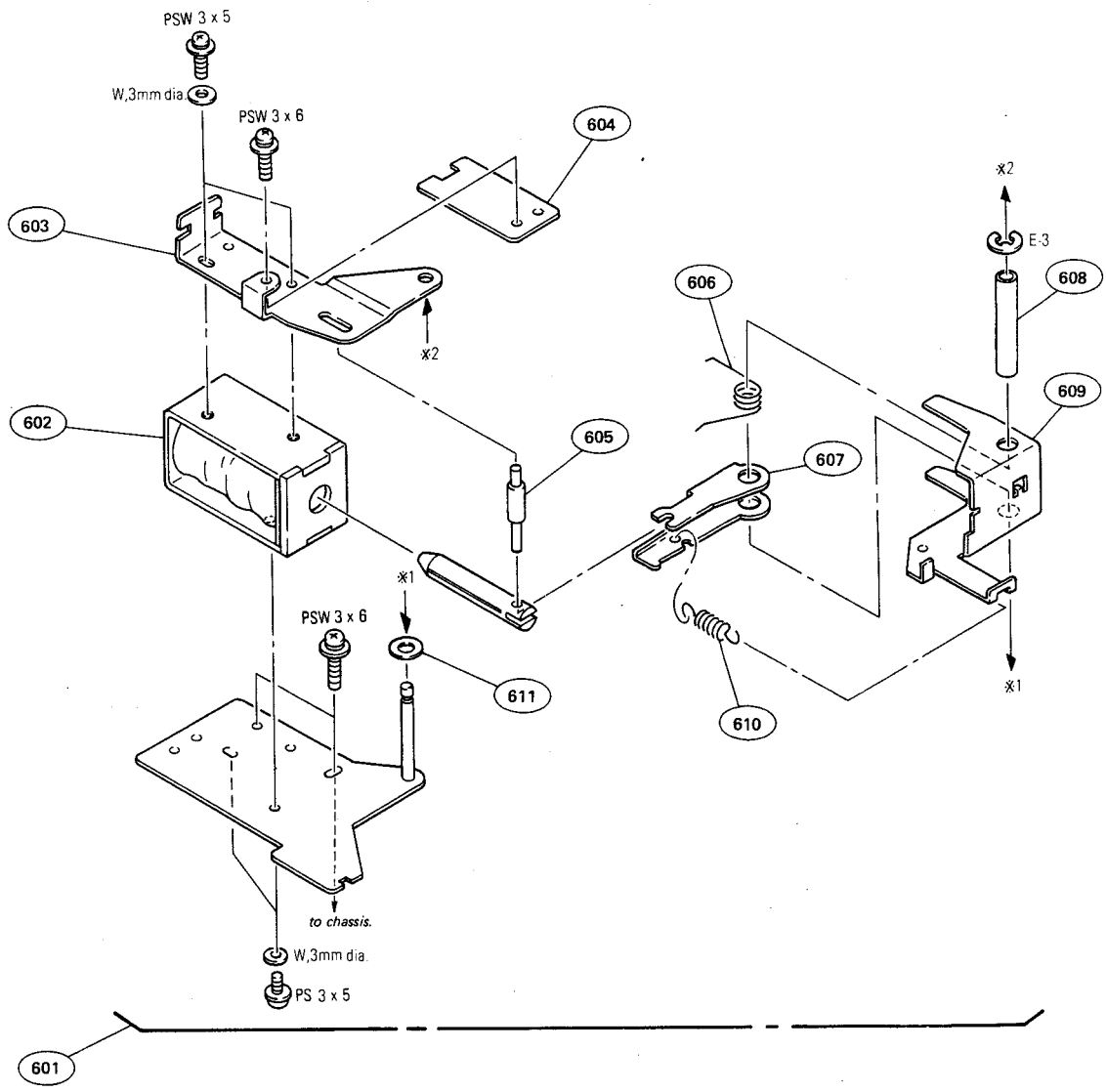

Gear Box Block

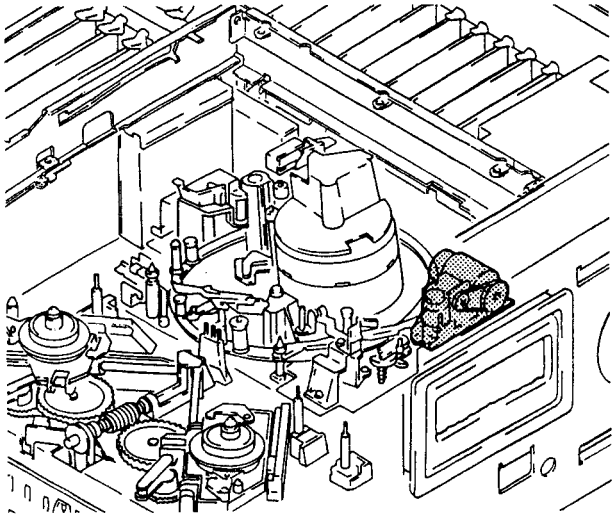

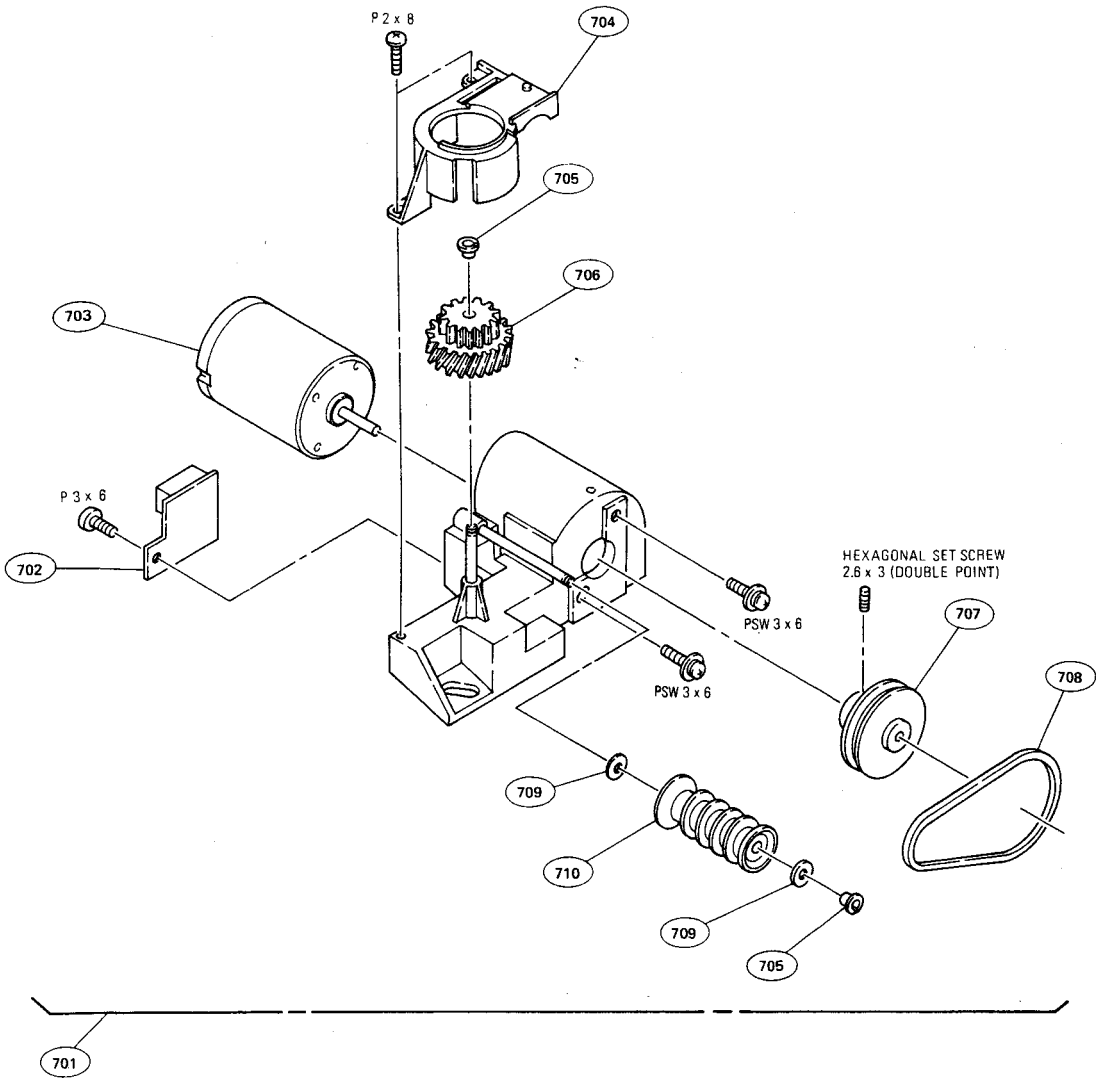

No.	Part No.	SP	Description
701	A-6750-213-D	s	BOX ASS'Y, GEAR
702	1-622-607-11	o	PRINTED CIRCUIT BOARD, PTC-31
703	8-835-179-01	s	MOTOR, DC MCB2B15
704	3-717-550-02	o	COVER, GEAR BOX
705	3-703-074-00	s	CAP 3, SHAFT
706	3-717-262-02	s	GEAR, DRIVE
707	3-717-261-02	o	PULLEY, MOTOR
708	3-688-066-01	s	BELT, LM
709	3-701-439-21	s	WASHER POLY 3MM DIA. 0.5T
710	X-3717-214-2	s	WORM ASS'Y

No.	Part No.	SP	Description
801	X-3717-251-1	o	SLIDER (LEFT) ASS'Y
802	A-6717-470-A	o	MOUNTED CIRCUIT BOARD, CP-103P
803	X-3717-253-1	o	RAIL ASS'Y, SLIDE
804	X-3717-394-1	o	PANEL ASS'Y, SUB
805	A-6734-254-A	o	CHASSIS ASS'Y, KEY
806	1-634-411-11	o	PRINTED CIRCUIT BOARD KY-205
807	1-552-539-00	s	SWITCH, KEY BOARD
808	1-535-699-11	o	WIRE, JUMPER
809	3-659-487-00	s	HOLDER, BUZER
810	1-571-280-11	s	SWITCH, TACTIL
811	1-571-167-11	s	SWITCH, TACTIL
812	1-571-168-11	s	SWITCH, TACTIL "AUTO EDIT"
813	1-634-412-11	o	PRINTED CIRCUIT BOARD, KY-206
814	3-659-488-00	s	PIN, BUZER HOLDER
815	3-717-416-03	o	PROTECTOR, KY
816	1-516-961-00	s	SWITCH, LEVER SLIDE
817	1-571-167-31	s	SWITCH, TACTIL "REW"
818	1-571-167-41	s	SWITCH, TACTIL "F.FWD"
819	1-571-167-21	s	SWITCH, TACTIL "PLAY"
820	3-305-651-11	s	RETAINER, LED
821	1-634-413-11	o	PRINTED CIRCUIT BOARD, DP-136
822	3-668-124-00	o	HOLDER, LED
823	3-717-309-01	o	BRACKET, PT
824	1-605-018-00	o	PRINTED CIRCUIT BOARD, PT-9
825	3-669-904-00	o	HOLDER, PT
826	3-660-978-00	s	SHEET, HEAT RESISTING
827	A-6734-253-A	o	DIAL BLOCK ASS'Y, SEARCH
835	X-2124-627-1	o	SHAFT SUB ASS'Y, MAIN
836	3-701-443-21	s	WASHER POLY 5MM DIA. 0.5T
837	2-143-602-03	o	CAM, SD
838	2-124-692-01	o	SPRING, COMPRESSION
839	2-124-690-01	o	GUIDE, LOCK IN
840	2-124-694-02	o	PLATE, CLUTCH
843	1-633-548-12	o	PRINTED CITCUIT BOARD, PTC-39
844	2-124-696-01	o	PROTECTOR, PTC
845	2-124-693-02	o	PLATE
846	1-571-168-21	s	SWITCH, TACTIL "REC"
847	1-535-699-11	o	WIRE, JUMPER
848	X-3717-252-1	o	SLIDER (RIGHT) ASS'Y
849	1-516-995-00	s	SWITCH, LEVER SLIDE
850	2-143-604-01	o	GUIDE, LOCK OUT
855	X-3717-254-6	o	CHASSIS SUB ASS'Y, SUB
856	1-571-169-11	s	SWITCH, TACTIL "EJECT"
857	1-571-169-21	s	SWITCH, TACTIL "STOP"
860	A-6754-116-A	o	MOUNTED CIRCUIT BOARD, KY-188PC
861	2-124-691-01	s	ROLLER
862	2-124-695-01	o	PLATE, CUSHION
863	2-124-699-02	o	HOLDER, SENSOR
864	2-123-601-01	s	RING, FG
865	2-143-603-01	o	ARM, RETURN
866	2-143-613-01	s	SPRING, TORSION

Function Control Chassis Block

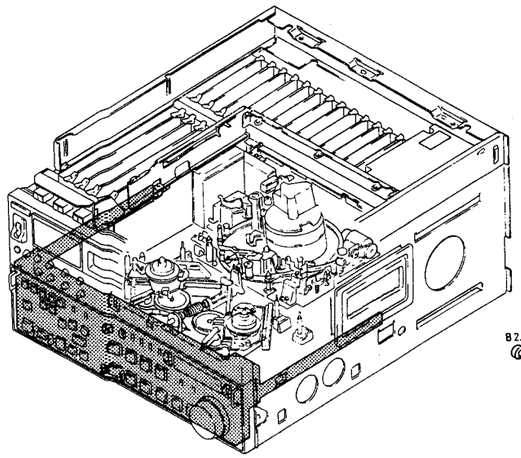

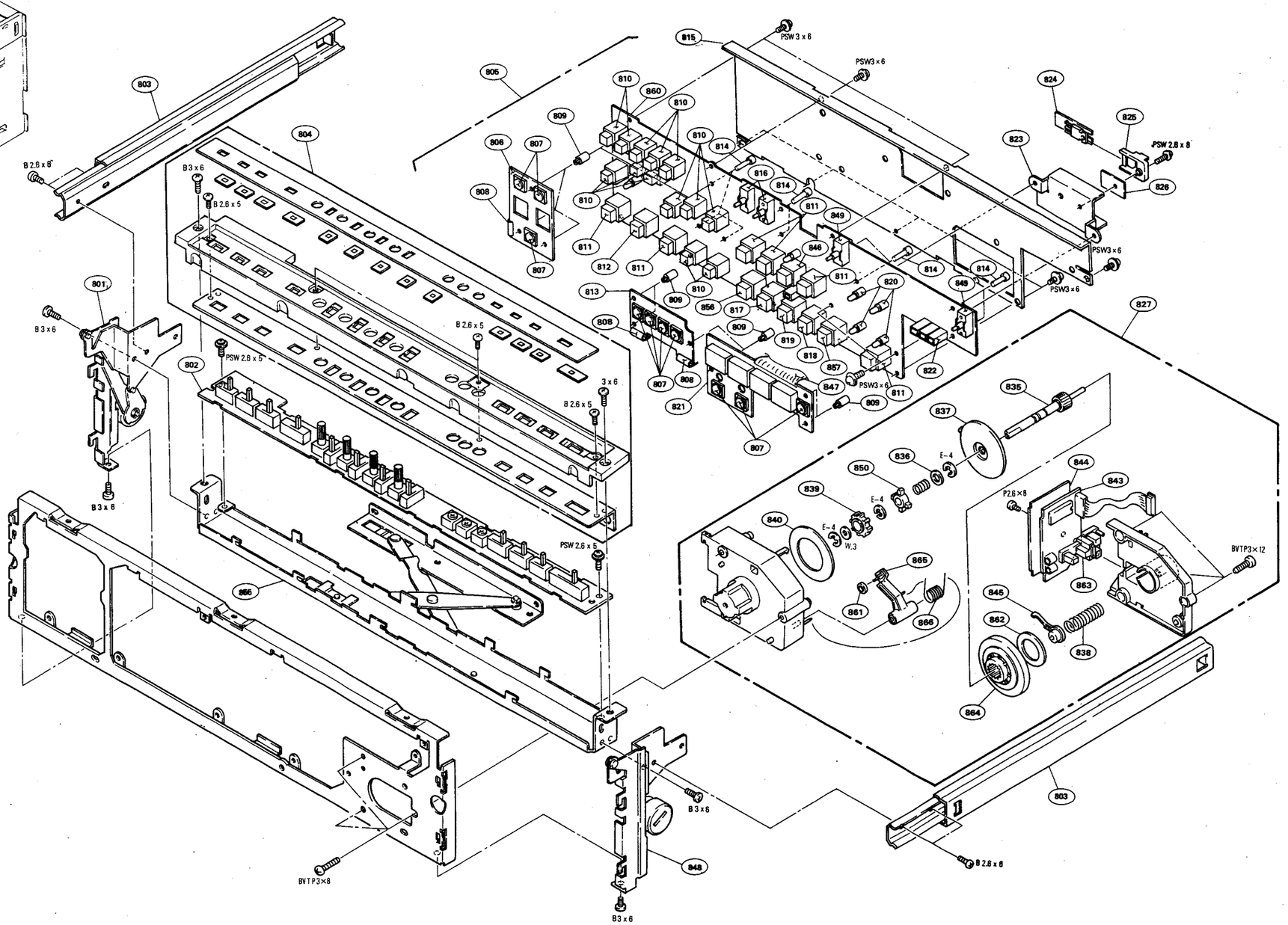

Level Control Chassis Block

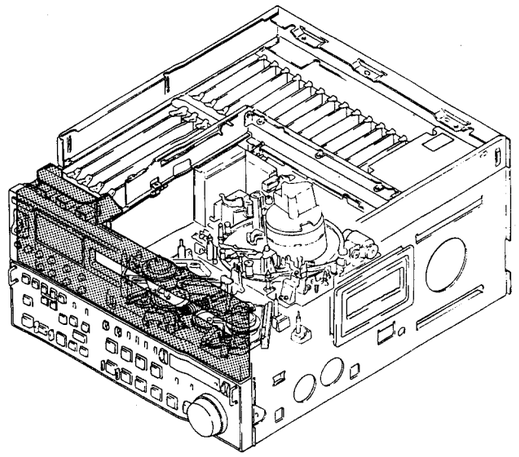

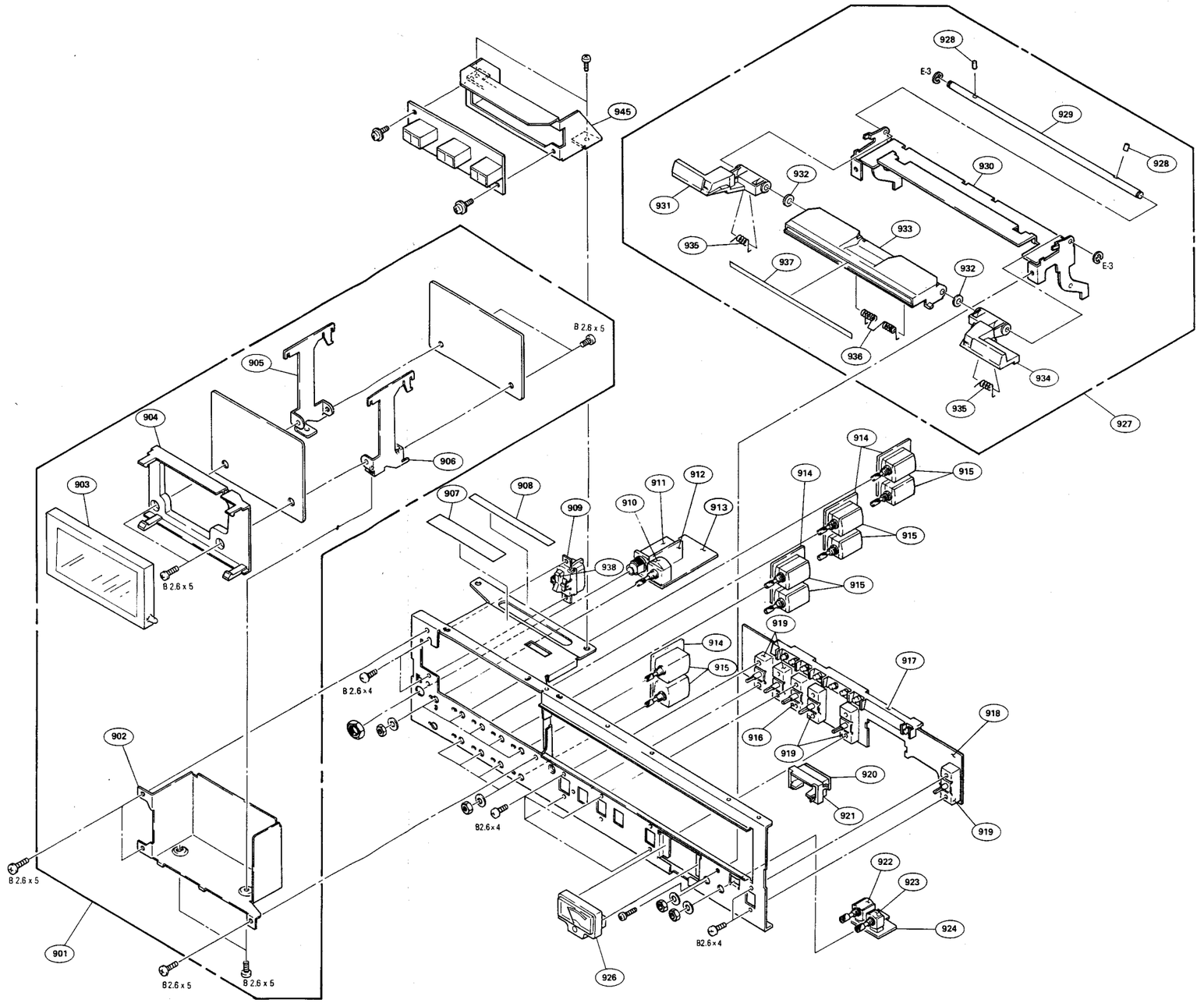

No.	Part No.	SP	Description
901	A-6730-924-A	o	TUBE ASS'Y, INDICATION
902	3-717-539-01	o	CASE, INDICATION TUBE
903	1-520-496-11	s	LEVEL METER, AUDIO
904	3-717-538-03	o	HOLDER, VFD
905	3-717-532-01	o	BRACKET (LEFT), DP
906	3-717-531-01	o	BRACKET (RIGHT), DP
907	3-717-530-01	o	LABEL (BF), PC BOARD
908	3-727-094-01	o	LABEL (M), PC BOARD
⚠ 909	1-570-117-11	s	SWITCH, LOCKER (AC POWER)
910	1-230-501-11	s	RES, VAR, CARBON 20K/20K
911	1-507-863-51	s	JACK, LARGE TYPE
912	1-622-590-13	o	PRINTED CIRCUIT BOARD, HP-33
913	1-622-589-11	o	PRINTED CIRCUIT BOARD, VR-62
914	1-622-592-11	o	PRINTED CIRCUIT BOARD, VR-42
915	1-237-781-11	s	VAR, CARBON (WITH SW) 10K
916	1-516-961-00	s	SWITCH, LEVER SLIDE
917	3-717-474-02	o	HOLDER, LED
918	1-622-573-14	o	PRINTED CIRCUIT BOARD, SW-144
919	1-516-995-00	s	SWITCH, LEVER SLIDE
920	1-622-591-11	o	PRINTED CIRCUIT BOARD, DP-72
921	3-717-323-01	o	COVER, METER LED
922	1-237-782-11	s	VAR, CARBON (WITH SW) 10K
923	1-237-719-11	s	VAR, CARBON 100K
924	1-622-588-11	o	PRINTED CIRCUIT BOARD, VR-61
926	1-520-494-11	s	METER, LEVEL (VIDEO)
927	A-6751-377-A	o	GUIDE ASS'Y, SC
928	3-677-193-00	o	PIN, STOPPER
929	3-717-617-01	o	SHAFT, SC GUIDE
930	3-717-621-01	o	BRACKET, SC GUIDE
931	3-717-618-01	o	GUIDE L, SC
932	3-701-441-21	s	WASHER POLY 4MM DIA. 0.5T
933	3-717-620-01	o	BRACKET, C-LOCK OUT
934	3-717-619-01	o	GUIDE R, SC
935	3-717-616-01	o	SPRING, SC GUIDE
936	3-717-615-01	o	SPRING, C-LOCK OUT
937	3-717-614-01	o	LABEL, C-LOCK OUT
938	3-688-814-01	s	CAP, SWITCH
945	3-738-785-01	o	BRACKET, DP

ASSETTE-UP

No.	Part No.	SP	Description
1001	3-578-389-00	s	SPRING, TENSION
1002	X-3717-361-1	o	ARM ASS'Y, PUSH OUT
1003	X-3717-362-1	o	ARM (LEFT) ASS'Y, CASSETTE IN
1004	3-717-461-06	o	GUIDE (LEFT), CASSETTE
1005	3-717-351-01	o	ROLLER (B), GUIDE
1006	3-677-187-00	s	ROLLER, GUIDE
1007	3-489-325-01	s	SPRING, TENSION
1008	3-717-347-01	o	ARM (LEFT), CASSETTE PRESS
1009	3-717-350-01	o	ROLLER (L), PRESS
1010	3-717-349-01	o	ROLLER (S), PRESS
1011	3-717-348-01	o	SHAFT, PRESS ROLLER
1012	3-717-365-01	s	GEAR, JOINT DRIVING
1013	X-3717-236-1	o	BRACKET ASS'Y, DOOR
1014	3-717-475-01	s	GEAR, DRIVING
1015	3-717-458-01	s	SPRING, COMPRESSION
1016	3-717-356-01	o	SLIDER, ARM DRIVING
1017	3-717-355-01	o	ARM, DRIVING
1018	3-531-863-01	s	SPRING, TENSION
1019	3-717-361-01	o	ARM (1), DOWN SW
1020	3-140-263-XX	s	SPRING, TENSION (23T)
1021	3-717-362-01	o	ARM (2), DOWN SW
1022	3-717-339-01	o	BRACKET, PHOTO
1023	1-622-604-11	o	PRINTED CIRCUIT BOARD, PC-33
1024	1-622-602-11	o	PRINTED CIRCUIT BOARD, CL-14
1025	1-563-969-11	o	CONNECTOR, F.P.C, 7P
1026	3-717-368-01	o	HOLDER (B), F.P.C
1027	1-559-265-11	o	WIRE, FLEXIBLE CARD
1028	X-3717-235-1	o	CHASSIS ASS'Y, LID OPEN LEVER
1029	3-491-360-00	S	SPRING, TENSION
1030	3-717-453-01	s	LEVER, LID OPEN
1031	3-717-369-03	o	STOPPER, DOOR
1032	X-3717-365-3	o	REFLECTOR ASS'Y
1033	3-701-439-21	s	WASHER POLY 3MM DIA. 0.5T
1034	3-717-457-01	o	ARM, DOOR SWITCHING
1035	3-668-508-00	s	SPRING, TENSION
1036	3-717-596-01	o	RUBBER, VIBRATION PROOF
1037	3-717-586-03	s	HOLDER (MAIN), LAMP
1038	3-703-358-03	o	PIN, PARALLEL (DIA.2 x 8)
1041	3-717-363-01	o	SHAFT, JOINT
1042	3-717-359-01	o	BEARING, DRIVING GEAR
1043	3-717-364-01	s	GEAR, JOINT
1044	A-6737-178-A	s	MOTOR BLOCK ASS'Y
1045	3-717-352-01	o	JOINT, MOTOR
1046	3-717-354-01	o	BRACKET, WORM
1047	1-541-376-11	s	MOTOR, DC (DNR-4700A)
1048	3-717-214-01	o	BEARING, WORM
1049	3-717-213-01	o	WASHER (A), WORM
1050	3-717-212-01	o	WASHER (B), WORM
1051	3-659-324-00	s	SPRING, COMPRESSION
1052	3-717-353-01	o	SHAFT, WORM
1053	3-717-210-01	s	WORM
1054	3-717-454-01	o	WHEEL, WORM
1055	3-717-455-01	o	ARM, DOOR SWITCHING ASSIST
1056	3-437-284-00	o	SPRING, TENSION
1057	X-3717-359-1	o	ARM (RIGHT) ASS'Y, CASSETTE IN
1058	3-717-346-01	o	ARM (RIGHT), CASSETTE PRESS
1059	3-717-435-04	o	DOOR, CASSETTE
1060	3-717-421-01	o	HOLDER (A), F.P.C
1061	X-3717-360-1	o	DECK ASS'Y, ARM
1062	3-509-127-00	s	SPRING, TENSION
1063	3-717-460-01	o	GUIDE (RIGHT), CASSETTE
1064	1-628-786-11	o	PRINTED CIRCUIT BOARD, PC-47
1065	X-3717-231-1	o	ARM ASS'Y, LS
1066	A-6751-360-D	s	CASSETTE COMPARTMENT ASS'Y
1067	1-623-198-11	o	PRINTED CIRCUIT BOARD, CCM-2
1068	1-623-267-11	o	PRINTED CIRCUIT BOARD, PC-41
1069	3-717-584-01	s	LEVER (B), LID OPEN
1070	3-717-585-01	o	BRACKET (B), PHOTO
1071	3-717-597-01	o	JOINT, PLATE
1072	3-717-598-01	o	JOINT, BEARWG
1073	3-717-599-01	s	ROLLER (C), GUIDE
1074	3-329-460-01	o	SPACER
1075	3-727-017-01	o	PLATE, GROUND
1076	3-738-709-01	s	PLATE
1077	3-646-090-01	s	RIVET
1078	A-6724-835-A	s	MOUNTED CIRCUIT BOARD, CL-24
1080	1-635-029-11	o	PRINTED CIRCUIT BOARD, CL-24

Cassette-up Compartment

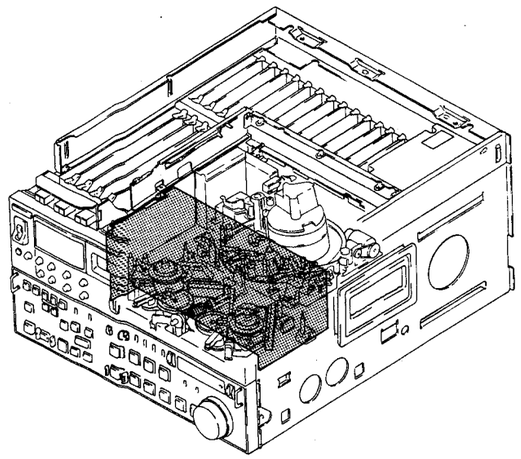

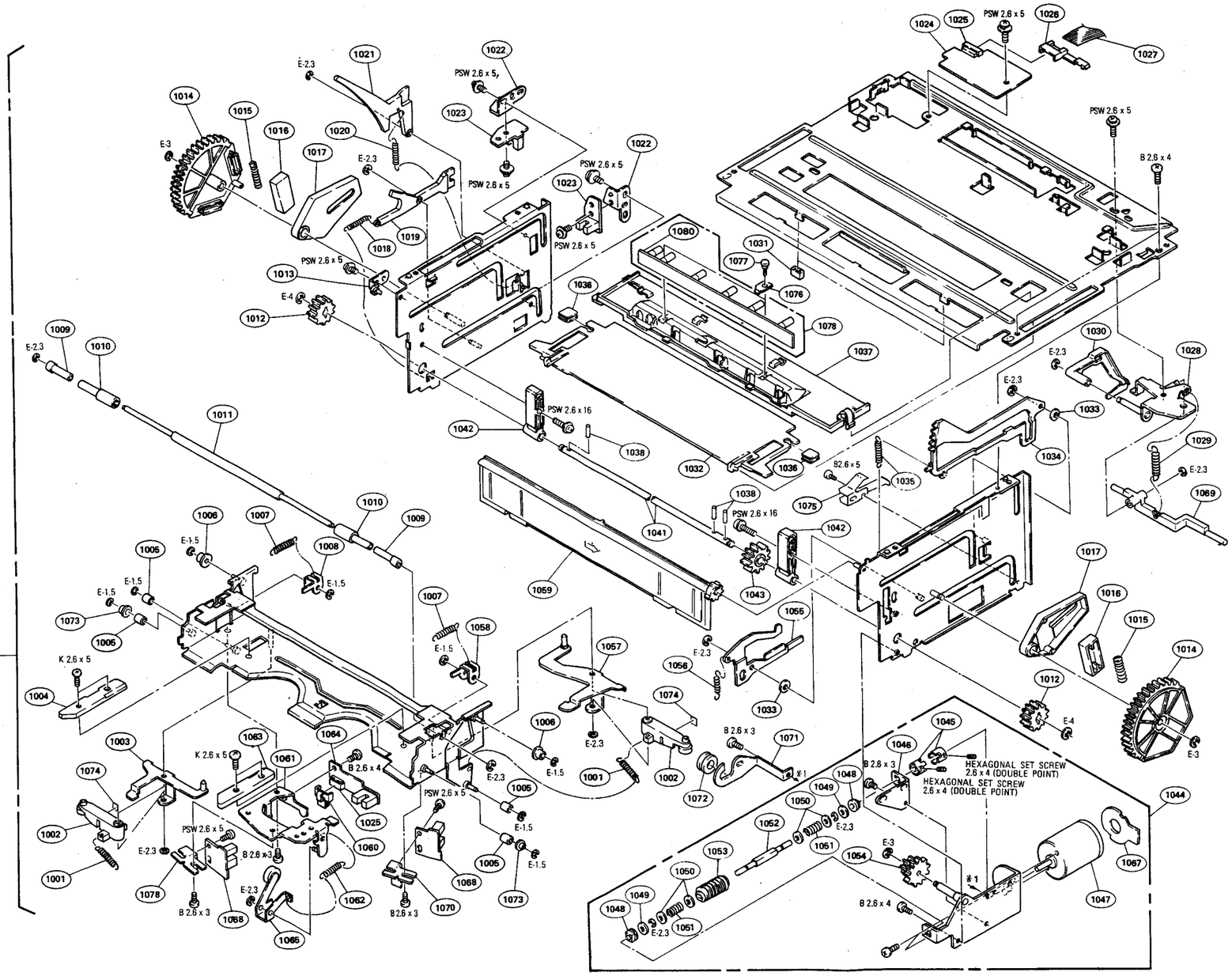

Connector Panel Block

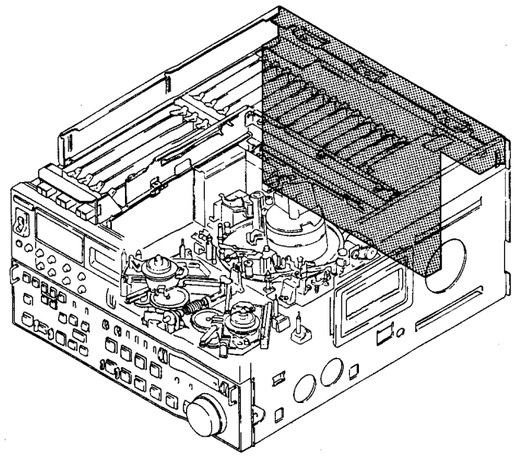

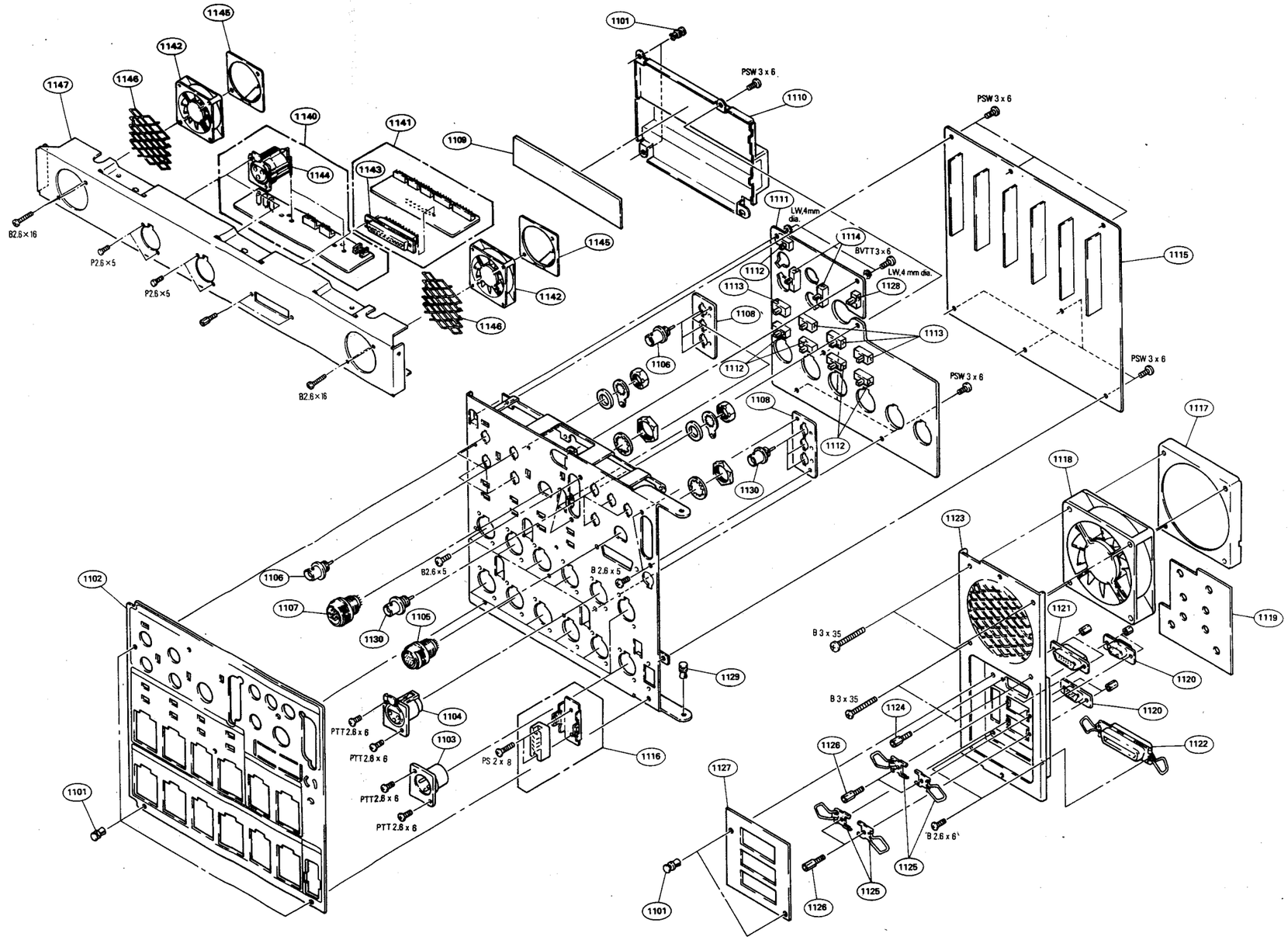

No.	Part No.	SP	Description
1101	3-531-576-01	s	RIVET
1102	3-717-436-11	o	PLATE (R), ORMANENTAL, CONNECTOR
1103	1-509-176-51	s	CONNECTOR, 3P, FEMALE
1104	1-509-184-51	s	CONNECTOR, 3P, MALE
1105	1-562-160-00	s	CONNECTOR (R-F) 12P
1106	1-561-781-41	s	CONNECTOR, BNC (RECEPTACLE)
1107	1-564-407-11	s	CONNECTOR (R-M)
1108	3-717-325-03	o	BRACKET, CONNECTOR
1109	3-717-324-01	o	INSULATOR, CP-101 SHIELD
1110	3-717-419-01	o	PLATE, SHIELD, CP-101
1111	A-6729-736-A	o	MOUNTED CIRCUIT BOARD, CP-101P
1112	1-554-958-11	S	SWITCH SLIDE (PC BOARD)
1113	1-571-062-11	s	SWITCH, SLIDE
1114	1-570-157-21	s	SWITCH, SLIDE
1115	A-6713-392-A	o	MOUNTED CIRCUIT BOARD, CP-161
1116	1-509-095-00	s	SOCKET, MULTI (8P)
1117	3-717-326-01	o	BRACKET, FAN COVER
1118	1-541-431-31	o	MOTOR, DC FAN
1119	1-635-563-11	o	PRINTED CIRCUIT BOARD, RM-92
1120	1-563-890-21	s	SOCKET, D-SUB CONNECTOR 9P
1121	1-566-441-11	s	PIN, D-SUB CONNECTOR 15P
1122	1-561-028-00	s	CONNECTOR, 36P
1123	3-717-485-01	o	PANEL (L), REAR
1124	3-717-328-01	o	SCREW (15P), CONNECTOR
1125	3-668-460-00	o	SPRING
1126	3-717-327-01	o	SCREW (9P), CONNECTOR
1127	3-717-420-01	o	PLATE, ORNAMENTAL, PANEL
1128	1-554-377-00	s	SWITCH, SLIDE
1129	4-818-403-00	s	RIVET
1130	1-561-781-31	s	CONNECTOR, BNC
1140	A-6713-393-A	o	MOUNTED CIRCUIT BOARD, CP-154
1141	A-6725-874-A	o	MOUNTED CIRCUIT BOARD, CP-153
1142	1-541-638-21	s	MOTOR, DC FAN
1143	1-563-142-11	s	CONNECTOR, D-SUB 25P
1144	1-568-006-11	s	CONNECTOR, XLR
1145	3-738-771-02	o	BRACKET, FAN
1146	3-738-772-01	o	VENTILATOR
1147	3-738-794-01	o	EX/REAR PANEL

No.	Part No.	SP	Description
⚠1201	1-560-222-21	s	3P INLET
1202	X-2068-004-0	s	TERMINAL ASS'Y
1203	2-068-008-00	s	WASHER
⚠1204	1-413-307-24	s	REGULATOR, SWITCHING (UR-21B)
1205	2-403-697-11	o	LID, CASE
1206	1-541-431-31	s	MOTOR, DC FAN
1207	2-434-457-01	o	BRACKET, LS-UR21-S
1208	2-434-441-01	o	BRACKET
1209	2-403-696-01	o	CASE
1210	2-434-441-11	o	BRACKET
1211	2-431-695-01	o	SHEET(IS-UR21-S), INSULATING
⚠1213	1-576-036-12	o	BREAKER, CIRCUIT
1214	1-628-132-12	o	PRINTED CIRCUIT BOARD, AC-96
1215	3-727-029-01	o	BRCKET, BREAKER
1216	3-727-030-01	o	PANEL (R), REAR
⚠1220	1-413-558-11	s	REGULATOR, SWITCHING (SOPS-1015)
1221	3-167-713-01	o	PLATE, GND

Switching Regulator Block

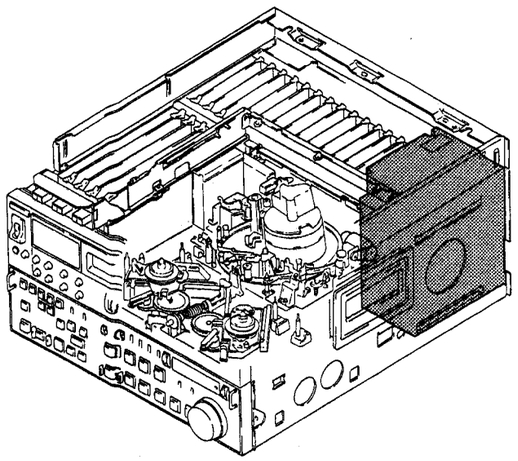

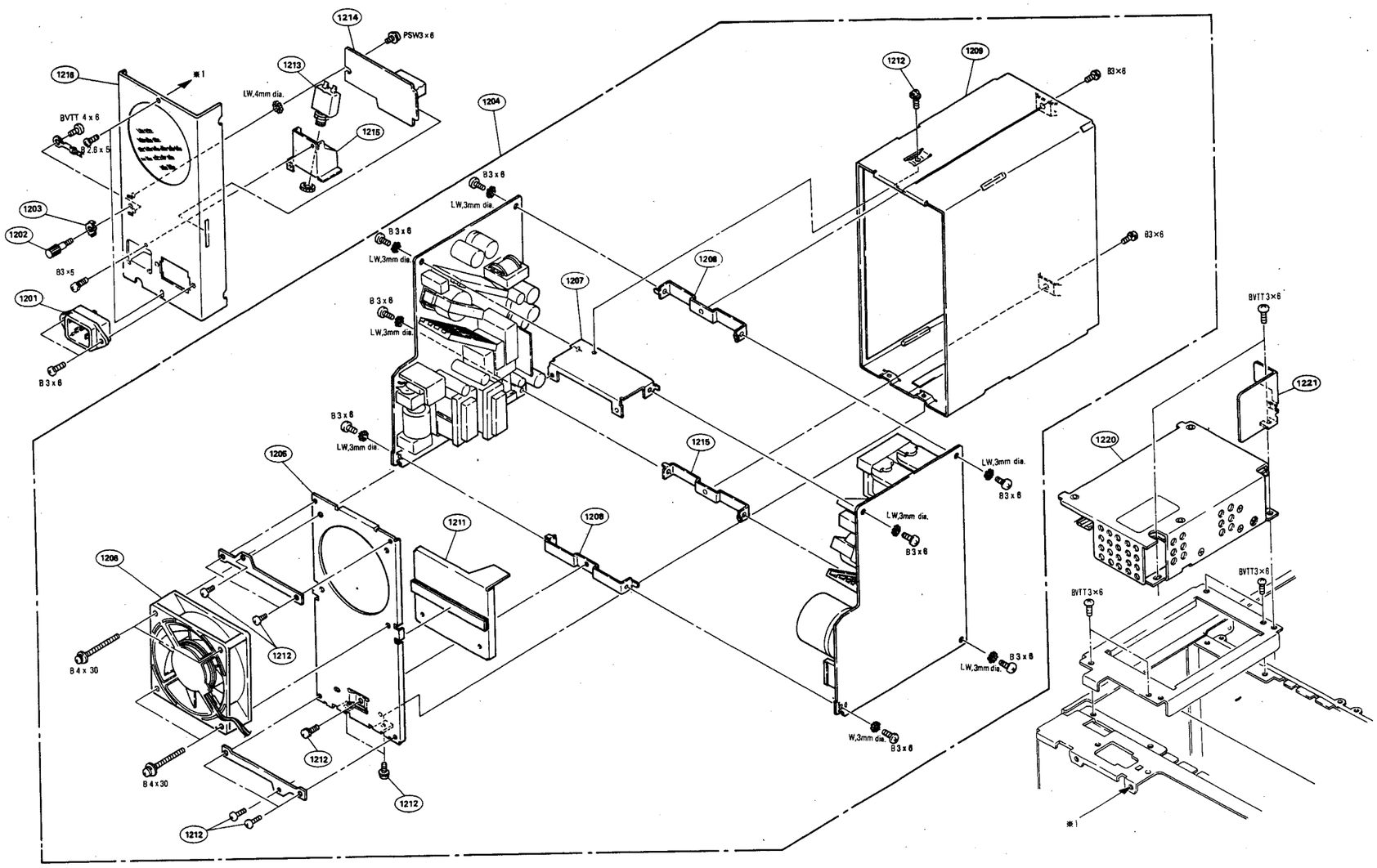

Printed Circuit Block(1)

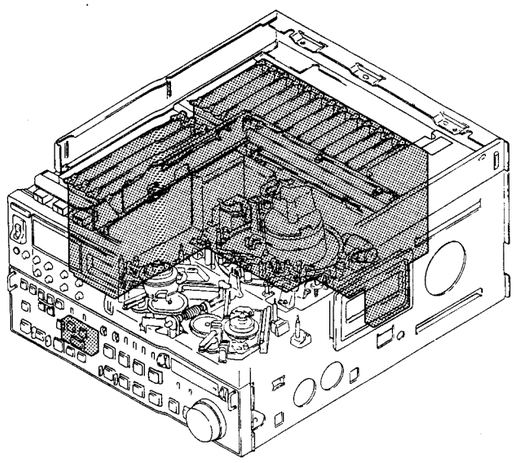

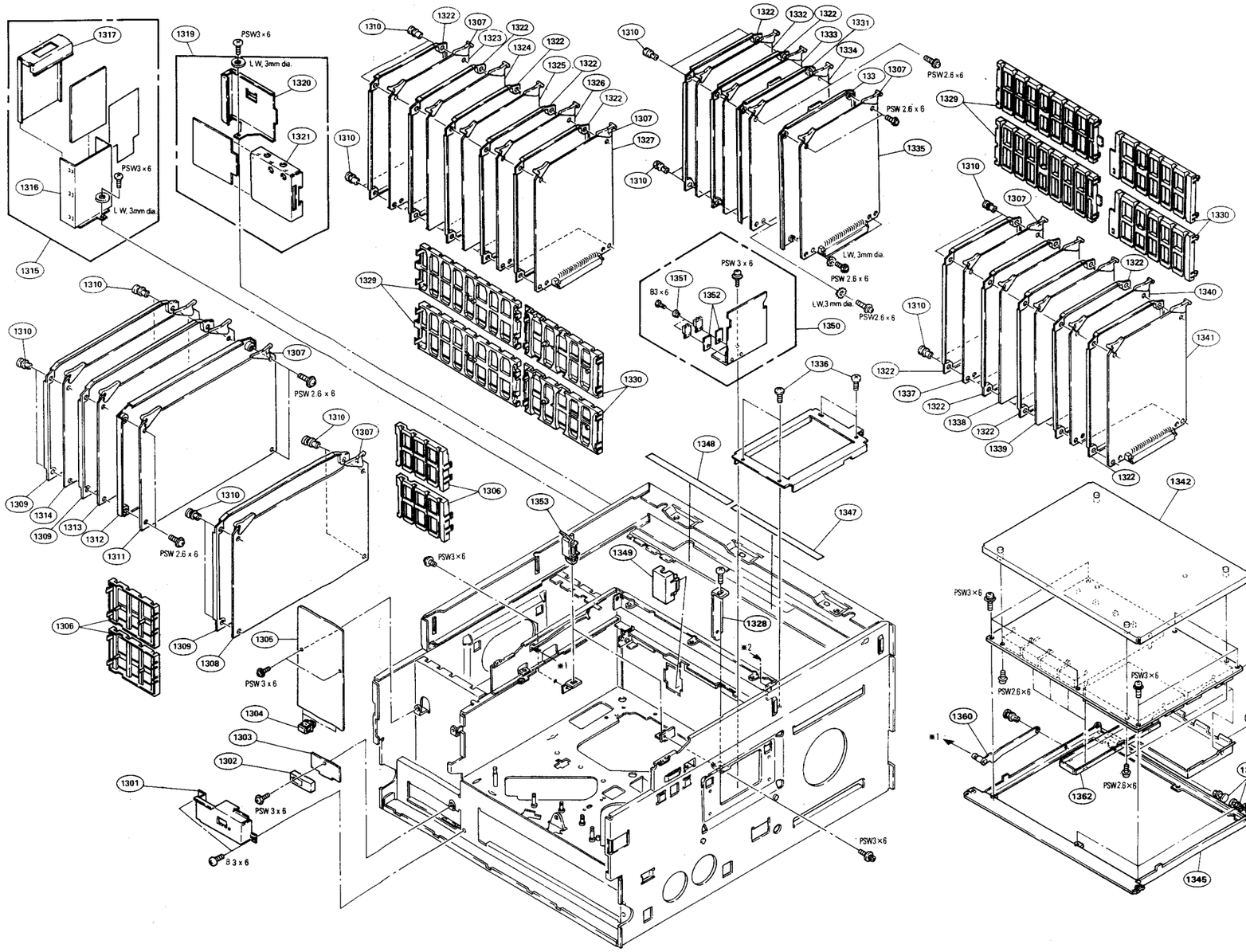

No.	Part No.	SP	Description
1301	3-717-583-02	o	PLATE, INDICATION
1302	1-548-152-11	o	HOURS METER, DIGITAL
1303	1-622-595-11	o	PRINTED CICUIT BOARD, HC-11
1304	3-703-072-00	o	HOLDER, PCB
1305	A-6713-273-A	o	MOUNTED CIRCUIT BOARD, BF-28
1306	3-717-633-04	o	GUIDE (P) (M), PCB
1307	2-251-622-11	s	LEVER, PC BOARD
1308	A-6711-982-A	o	MOUNTED CIRCUIT BOARD, DEC-42P
1309	3-717-472-01	o	INSULATOR (M), CARD
1310	3-531-576-01	s	RIVET
1311	A-6727-225-A	o	MOUNTED CIRCUIT BOARD, DM-56PC
1312	X-3717-255-1	o	PLATE (M) ASS'Y, SHIELD, CARD
1313	A-6727-094-A	o	MOUNTED CIRCUIT BOARD, TBC-7D
1314	A-6727-228-A	o	MOUNTED CIRCUIT BOARD, TBC-12PC
1315	A-6715-355-A	o	MOUNTED CIRCUIT BOARD, DT-15
1316	3-717-540-01	o	BRACKET, DT
1317	3-717-541-02	o	CASE, SHIELD, DT
1319	A-6727-223-A	o	MOUNTED CIRCUIT BOARD, RE-69
1320	3-717-415-01	o	BRACKET, RE
1321	3-717-414-01	o	CASE, SHIELD, RE
1322	3-717-473-01	o	INSULATOR (S), CARD
1323	A-6727-227-A	o	MOUNTED CIRCUIT BOARD, TBC-9PC
1324	A-6711-891-A	o	MOUNTED CIRCUIT BOARD, EN-48P
1325	A-6711-892-B	o	MOUNTED CIRCUIT BOARD, VO-18P
1326	A-6711-893-A	o	MOUNTED CIRCUIT BOARD, MD-46P
1327	A-6727-067-A	o	MOUNTED CIRCUIT BOARD, DEC-46P
1328	3-717-577-01	o	PROTECTOR, CASSETTE COMPARTMENT
1329	3-717-430-01	o	GUIDE (LL), PCB
1330	3-717-431-01	o	GUIDE (RL), PCB
1331	X-3717-256-1	o	PLATE (S) ASS'Y, SHIELD, CARD
1332	A-6713-270-A	o	MOUNTED CIRCUIT BOARD, AFM-1
1333	A-6713-310-A	o	MOUNTED CIRCUIT BOARD, AU-75P
1334	A-6713-391-A	o	MOUNTED CIRCUIT BOARD, AU-76PC
1335	A-6717-583-A	o	MOUNTED CIRCUIT BOARD, TC-40PC
1336	3-703-108-01	s	SCREW
1337	A-6715-356-A	o	MOUNTED CIRCUIT BOARD, SV-82PC
1338	A-6715-442-A	o	MOUNTED CIRCUIT BOARD, SV-121
1339	A-6715-443-A	o	MOUNTED CIRCUIT BOARD, SV-122
1340	A-6715-359-A	o	MOUNTED CIRCUIT BOARD, DT-13PC
1341	A-6715-444-A	o	MOUNTED CITCUIT BOARD, DT-14PC
1342	X-3717-390-1	o	PLATE ASSY, SHIELD, RP
1343	A-6727-224-A	o	MOUNTED CIRCUIT BOARD, RP-46P
1345	3-738-790-01	o	BRACKET, RP
1347	3-738-721-01	o	LABEL (RL), PC BOARD
1348	3-717-627-01	o	LABEL (P) (LL), PC BOARD
1349	3-677-741-00	o	GUARD, AIR
1350	A-6715-440-A	o	MOUNTED CIRCUIT BOARD, SE-146
1351	2-371-561-00	s	BUSHING (P), INSULATING
1352	3-660-978-00	s	SHEET, HEAT RESISTING
1353	3-682-047-01	o	HOLDER (A), PC BOARD
1355	3-646-090-11	s	RIVET
1360	X-3717-392-1	o	STOPPER ASSY, RP
1361	3-683-593-11	o	LID UPPER, SHIELD CASE (A)
1362	3-683-599-01	o	LID UPPER, SHIELD CASE (DEC-8)

RINTED CIRCUIT BOARD(2)

No.	Part No.	SP	Description
1401	3-717-629-01	o	SHEET METAL (64P), ORNAMENTAL
1402	3-717-552-01	o	PLATE (LARGE), ORNAMENTAL SLIDE
1403	3-717-551-01	o	PLATE (SMALL), ORNAMENTAL, SLIDE
1404	2-251-622-11	s	LEVER, PC BOARD
1405	A-6717-471-A	o	MOUNTED CIRCUIT BOARD, SY-64P
1406	X-3717-290-1	o	PLATE (L) ASS'Y, SHIELD, CARD
1408	3-717-469-01	o	SHEET METAL (61), ORNAMENTAL
1409	A-6717-582-A	o	MOUNTED CIRCUIT BOARD, SY-151
1410	A-6715-354-A	o	MOUNTED CIRCUIT BOARD, RE-28PC
1411	3-717-308-01	o	BRACKET (1), RE
1412	3-717-410-01	o	GUIDE (S), PCB
1413	3-717-468-01	o	JOINT, CONNECTOR
1414	A-6725-871-A	o	MOUNTED CIRCUIT BOARD, MB-332
1415	3-717-490-01	o	PLATE, SHIELD, MB-117
1417	3-717-543-01	o	GUARD, MB
1418	A-6725-872-A	o	MOUNTED CIRCUIT BOARD, MB-331
1419	3-717-480-03	o	BRACKET (LR), MB
1420	3-717-491-04	o	BRACKET (LF), MB
1421	3-717-631-01	o	BRACKET (S) (P), MB
1422	3-717-630-01	o	BRACKET (M) (P), MB
1423	4-302-401-00	s	BUSHING, DEGAUSSING COIL
1424	4-812-134-00	s	RIVET NYLON, 3.5
1425	1-622-561-11	o	PRINTED CIRCUIT BOARD, DR-56
1426	2-371-561-00	s	BUSHING (P), INSULATING
1427	4-911-232-01	s	SHEET, INSULATING
1428	3-660-978-00	s	SHEET, HEAT RESISTING
1429	A-6715-361-A	o	MOUNTED CIRCUIT BOARD, RE-36
1430	3-738-722-01	o	LABEL (S), PC BOARD
1431	3-703-353-01	o	SUPPORT, PC BOARD
1432	3-727-012-01	o	STOPPER, SY
1440	3-727-098-01	o	PROTECTOR, MB
1441	3-738-775-01	o	REINFORCEMENT, MB

Printed Circuit Block(2)

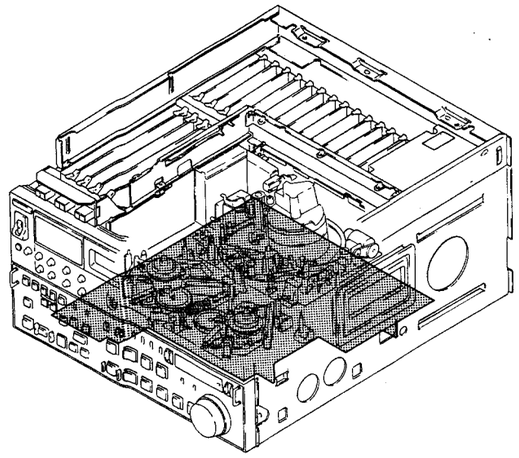

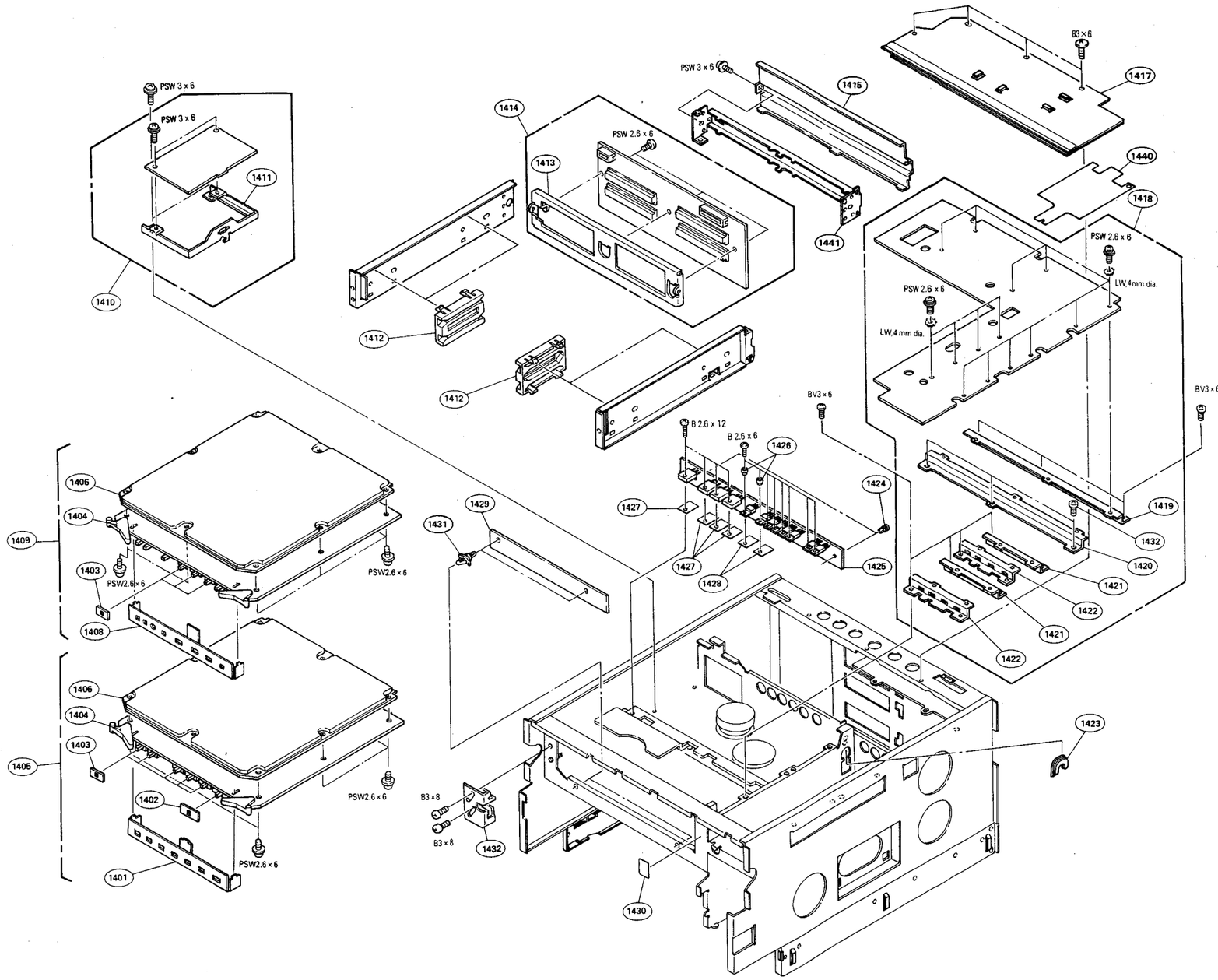

Ornamental Panel Block

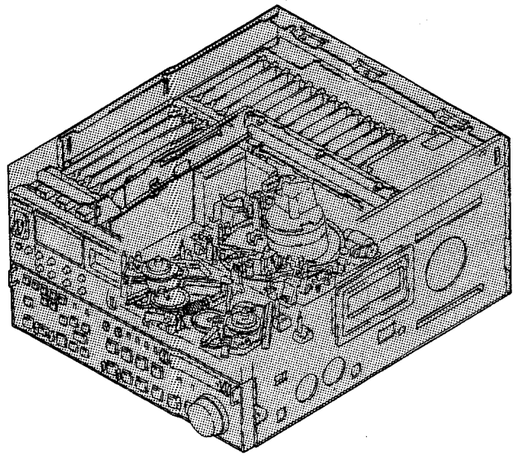

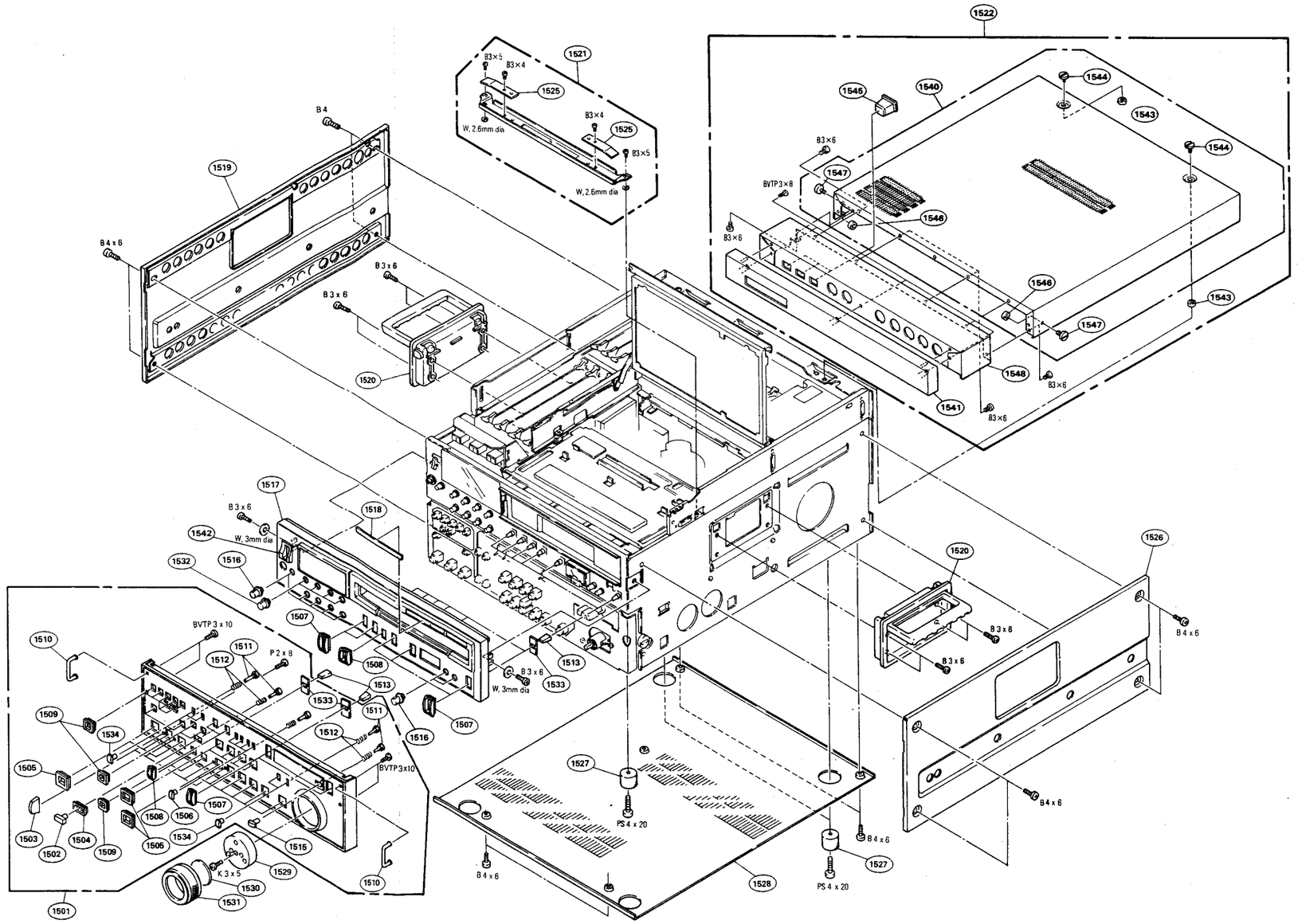

No.	Part No.	SP	Description
1501	A-6704-431-A	o	PANEL ASS'Y, KEY
1502	3-717-381-01	s	PUSH BUTTON (15 x 8)
1503	3-717-380-01	o	GUARD, REC
1504	3-717-378-01	o	FRAME (20 x 13), ORNAMENTAL, BUTTON
1505	3-717-377-01	o	FRAME (SQUARE 17), ORNAMENTAL
1506	3-668-007-11	s	PUSH BUTTON, 5 x 9 (WHITE)
1507	3-717-374-01	o	FRAME (23 x 12), ORNAMENTAL, SW
1508	3-717-375-01	o	FRAME (18 x 12), ORNAMENTAL, SW
1509	3-717-379-01	o	FRAME (SQUARE 14), ORNAMENTAL
1510	3-717-425-01	o	HAMDLE
1511	3-668-009-02	s	PIN, PUSH BUTTON
1512	4-309-349-00	s	SPRING, COIL
1513	3-717-382-01	s	KNOB, LEVER, SW
1515	3-668-008-02	s	PUSH BUTTON (3 x 5)
1516	X-3717-237-1	s	KNOB ASS'Y, VOL
1517	X-3717-395-1	o	PANEL SUB ASS'Y, FRONT
1518	3-738-719-01	o	LABEL, MODEL
1519	3-717-482-01	o	CABINET (LEFT)
1520	X-3642-018-0	s	HANDLE ASS'Y
1521	A-6771-291-A	s	STAY ASS'Y, CASSETTE COMPARTMENT
1522	A-6703-689-A	o	LID ASS'Y, UPPER
1523	3-717-392-01	o	SCREW, LID
1524	3-688-102-01	o	SPACER, M4
1525	3-717-306-01	o	SPRING
1526	3-717-483-01	o	CABINET (RIGHT)
1527	3-642-656-01	s	FOOT
1528	3-717-437-01	s	PLATE, BOTTOM
1529	3-717-370-01	o	KNOB, DIAL
1530	3-717-557-01	o	PLATE, KNOB
1531	3-668-012-00	s	RUBBER, DIAL KNOB
1532	X-3717-261-1	s	KNOB ASS'Y, VOL
1533	3-717-613-01	o	PLATE ORNAMENTAL, LEVER SW
1534	3-668-007-02	s	PUSH BUTTON, 5 x 9 (BLACK)
1540	A-6703-690-A	o	LID (R) ASSY, UPPER
1541	X-3717-393-1	o	PANEL ASSY, DK
1542	2-251-642-00	s	GUARD, POWER SWITCH
1543	3-688-102-01	o	SPACER, M4
1544	3-717-392-01	o	SCREW, LID
1545	3-738-740-01	o	ASSIST, LED
1546	3-738-741-01	o	SPACER (4.2), M4
1547	3-738-742-01	o	SCREW (L), LID
1548	3-738-791-01	o	LID (F), UPPER

19-3. ELECTRICAL PARTS LIST

General Purpose Electrical Parts List

Parts that are not listed in the "reference numbers order list" are shown in following list.
Reference numbers are omitted.

ABBREVIATIONS

Ref. No.	Description	Ref. No.	Description	Ref. No.	Description
C□□, CT□□	CAPACITOR	IC□□	IC	Q□□	TRANSISTOR
CF□□	CERAMIC FILTER	J□□	JACK	R□□, RV□□	RESISTOR
CN□□	CONNECTOR	L□□	INDUCTOR	RY□□	RELAY
D□□	DIODE	M□□	MOTOR	S□□, SW□□	SWITCH
DL□□	DELAY LINE	ME□□	METER	SB□□	SOLAR BATTERY
F□□	FUSE	MIC□□	MICROPHONE	T□□	TRANSFORMER
FB□□	FERRITE BEAD	PG□□	PG COIL	TH□□	THERMISTOR
FL□□	FILTER	PL□□	LAMP	X□□	CRYSTAL
H□□	HEAD	PM□□	SOLENOIDE		

All capacitors are in micro farads unless otherwise specified.

All inductors are in micro henries unless otherwise specified.

All resistors are in ohms.

CAPACITOR(ELECT)

Part No.	SP	Description
1-124-477-11	s	ECT 47uF 20% 25V
1-124-584-00	s	ECT 100uF 20% 10V
1-124-589-11	s	ECT 47uF 20% 16V
1-126-101-11	s	ECT 100uF 20% 16V
1-126-157-11	s	ECT 10uF 20% 16V

CAPACITOR(CERAMIC)

Part No.	SP	Description
1-161-021-11	s	RAMIC 0.047uF 10% 25V
1-162-637-11	s	RAMIC, CHIP 0.47uF 16V
1-162-638-11	s	RAMIC, CHIP 1uF 16V
1-162-718-11	s	RAMIC 220PF 1% 50V
1-162-726-11	s	RAMIC 470PF 1% 50V
1-163-009-11	s	RAMIC, CHIP 0.001uF 10% 50V
1-163-017-00	s	RAMIC, CHIP 0.0047uF 5% 50V
1-163-035-00	s	RAMIC, CHIP 0.047uF 50V
1-163-037-11	s	RAMIC, CHIP 0.022uF 10% 25V
1-163-038-00	s	RAMIC, CHIP 0.1uF 25V
1-163-093-00	s	RAMIC, CHIP 10PF 5% 50V
1-163-099-00	s	RAMIC, CHIP 18PF 5% 50V
1-163-101-00	s	RAMIC, CHIP 22PF 5% 50V
1-163-105-00	s	RAMIC, CHIP 33PF 5% 50V
1-163-109-00	s	RAMIC, CHIP 47PF 5% 50V
1-163-113-00	s	RAMIC, CHIP 68PF 5% 50V
1-163-117-00	s	RAMIC, CHIP 100PF 5% 50V
1-163-121-00	s	RAMIC, CHIP 150PF 5% 50V
1-163-125-00	s	RAMIC, CHIP 220PF 5% 50V
1-163-129-00	s	RAMIC, CHIP 330PF 5% 50V
1-163-133-00	s	RAMIC, CHIP 470PF 5% 50V
1-163-135-00	s	RAMIC, CHIP 560PF 5% 50V
1-163-137-00	s	RAMIC, CHIP 680PF 5% 50V
1-163-141-00	s	RAMIC, CHIP 0.001uF 5% 50V
1-164-161-11	s	RAMIC, CHIP 0.0022uF 10% 100V
1-164-232-11	s	RAMIC 0.01uF 10% 100V

NOTE: For the # marked parts in the following part list, refer to the section 20 "CHANGED PARTS".

RESISTOR(METAL)

Part No.	SP	Description
1-216-001-00	s	TAL, CHIP 10 5% 1/10W
1-216-009-00	s	TAL, CHIP 22 5% 1/10W
1-216-013-00	s	TAL, CHIP 33 5% 1/10W
1-216-017-00	s	TAL, CHIP 47 5% 1/10W
1-216-018-00	s	TAL, CHIP 51 5% 1/10W
1-216-019-00	s	TAL, CHIP 56 5% 1/10W
1-216-021-00	s	TAL, CHIP 68 5% 1/10W
1-216-023-00	s	TAL, CHIP 82 5% 1/10W
1-216-025-00	s	TAL, CHIP 100 5% 1/10W
1-216-027-00	s	TAL, CHIP 120 5% 1/10W
1-216-029-00	s	TAL, CHIP 150 5% 1/10W
1-216-031-00	s	TAL, CHIP 180 5% 1/10W
1-216-032-00	s	TAL, CHIP 200 5% 1/10W
1-216-033-00	s	TAL, CHIP 220 5% 1/10W
1-216-035-00	s	TAL, CHIP 270 5% 1/10W
1-216-037-00	s	TAL, CHIP 330 5% 1/10W
1-216-039-00	s	TAL, CHIP 390 5% 1/10W
1-216-041-00	s	TAL, CHIP 470 5% 1/10W
1-216-043-00	s	TAL, CHIP 560 5% 1/10W
1-216-045-00	s	TAL, CHIP 680 5% 1/10W
1-216-047-00	s	TAL, CHIP 820 5% 1/10W
1-216-049-00	s	TAL, CHIP 1K 5% 1/10W
1-216-051-00	s	TAL, CHIP 1.2K 5% 1/10W
1-216-053-00	s	TAL, CHIP 1.5K 5% 1/10W
1-216-055-00	s	TAL, CHIP 1.8K 5% 1/10W
1-216-057-00	s	TAL, CHIP 2.2K 5% 1/10W
1-216-059-00	s	TAL, CHIP 2.7K 5% 1/10W
1-216-061-00	s	TAL, CHIP 3.3K 5% 1/10W
1-216-063-00	s	TAL, CHIP 3.9K 5% 1/10W
1-216-065-00	s	TAL, CHIP 4.7K 5% 1/10W
1-216-067-00	s	TAL, CHIP 5.6K 5% 1/10W
1-216-069-00	s	TAL, CHIP 6.8K 5% 1/10W
1-216-070-00	s	TAL, CHIP 7.5K 5% 1/10W
1-216-071-00	s	TAL, CHIP 8.2K 5% 1/10W
1-216-073-00	s	TAL, CHIP 10K 5% 1/10W
1-216-075-00	s	TAL, CHIP 12K 5% 1/10W
1-216-077-00	s	TAL, CHIP 15K 5% 1/10W
1-216-079-00	s	TAL, CHIP 18K 5% 1/10W
1-216-081-00	s	TAL, CHIP 22K 5% 1/10W
1-216-083-00	s	TAL, CHIP 27K 5% 1/10W
1-216-085-00	s	TAL, CHIP 33K 5% 1/10W
1-216-089-00	s	TAL, CHIP 47K 5% 1/10W
1-216-091-00	s	TAL, CHIP 56K 5% 1/10W
1-216-092-00	s	TAL 62K 5% 1/10W
1-216-093-00	s	TAL, CHIP 68K 5% 1/10W
1-216-095-00	s	TAL, CHIP 82K 5% 1/10W
1-216-097-00	s	TAL, CHIP 100K 5% 1/10W
1-216-099-00	s	TAL, CHIP 120K 5% 1/10W
1-216-101-00	s	TAL, CHIP 150K 5% 1/10W
1-216-103-00	s	TAL, CHIP 180K 5% 1/10W
1-216-104-00	s	TAL, CHIP 200K 5% 1/10W
1-216-105-00	s	TAL, CHIP 220K 5% 1/10W
1-216-107-00	s	TAL, CHIP 270K 5% 1/10W
1-216-109-00	s	TAL, CHIP 330K 5% 1/10W
1-216-111-00	s	TAL, CHIP 390K 5% 1/10W
1-216-113-00	s	TAL, CHIP 470K 5% 1/10W
1-216-115-00	s	TAL, CHIP 560K 5% 1/10W
1-216-121-00	s	TAL, CHIP 1M 5% 1/10W

(RESISTOR(METAL))

Part No.	SP	Description
1-216-133-00	s	TAL, CHIP 3.3M 5% 1/10W
1-216-198-00	s	TAL, CHIP 1K 5% 1/8W
1-216-294-00	s	TAL, CHIP 10M 5% 1/8W
1-216-295-00	s	TAL, CHIP 0-OHM
1-216-309-00	s	TAL, CHIP 5.6 5% 1/10W

RESISTOR(CARBON)

Part No.	SP	Description
1-247-887-00	s	RBON 220K 5% 1/4W
1-247-897-11	s	RBON 560K 5% 1/4W
1-247-903-00	s	RBON 1M 5% 1/4W
1-249-390-11	s	RBON 5.6 5% 1/4W
1-249-404-00	s	RBON 82 5% 1/4W
1-249-405-11	s	RBON 100 5% 1/4W
1-249-406-11	s	RBON 120 5% 1/4W
1-249-407-11	s	RBON 150 5% 1/4W
1-249-408-11	s	RBON 180 5% 1/4W
1-249-409-11	s	RBON 220 5% 1/4W
1-249-417-11	s	RBON 1K 5% 1/4W
1-249-418-11	s	RBON 1.2K 5% 1/4W
1-249-421-11	s	RBON 2.2K 5% 1/4W
1-249-423-11	s	RBON 3.3K 5% 1/4W
1-249-425-11	s	RBON 4.7K 5% 1/4W
1-249-429-11	s	RBON 10K 5% 1/4W
1-249-431-11	s	RBON 15K 5% 1/4W
1-249-432-11	s	RBON 18K 5% 1/4W
1-249-433-11	s	RBON 22K 5% 1/4W
1-249-437-11	s	RBON 47K 5% 1/4W
1-249-441-11	s	RBON 100K 5% 1/4W

INDUCTOR

Part No.	SP	Description
1-408-413-00	s	DUCTOR 22uH
1-408-421-00	s	DUCTOR 100uH
1-410-466-41	s	DUCTOR 4.7uH
1-410-470-11	s	DUCTOR 10uH
1-410-478-11	s	DUCTOR 47uH
1-410-482-31	s	DUCTOR 100uH

AC-96 BOARD

Ref. No. or Q'ty	Part No.	SP	Description
1pc	1-628-132-12	o	PRINTED CIRCUIT BOARD, AC-96
C1	⚠1-136-185-00	s	FILM 0.22uF 20% 250V
C2	⚠1-161-742-00	s	CERAMIC 0.0022uF 20% 400V
C3	⚠1-161-742-00	s	CERAMIC 0.0022uF 20% 400V
C4	⚠1-161-742-00	s	CERAMIC 0.0022uF 20% 400V
CN420	⚠1-564-241-00	o	CONNECTOR, 4P, MALE
CN421	⚠1-564-674-11	o	CONNECTOR, 8P, MALE
R1	1-214-937-00	s	METAL 1M 1% 1/2W

AFM-1 BOARD

Ref. No. or Q'ty	Part No.	SP	Description
1pc	A-6713-270-A	o	MOUNTED CIRCUIT BOARD, AFM-1
2pcs	7-622-207-05	s	N 2.6, TYPE 2
2pcs	7-628-254-30	s	SCREW +PS 2.6X10
C1	1-124-443-00	s	ELECT 100uF 20% 10V
C3	1-124-443-00	s	ELECT 100uF 20% 10V
C8	1-124-443-00	s	ELECT 100uF 20% 10V
C13	1-124-925-11	s	ELECT 2.2uF 20% 100V
C15	1-124-463-00	s	ELECT 0.1uF 20% 50V
C18	1-124-925-11	s	ELECT 2.2uF 20% 100V
C20	1-124-443-00	s	ELECT 100uF 20% 10V
C25	1-124-925-11	s	ELECT 2.2uF 20% 100V
C27	1-124-463-00	s	ELECT 0.1uF 20% 50V
C30	1-124-925-11	s	ELECT 2.2uF 20% 100V
C102	1-124-443-00	s	ELECT 100uF 20% 10V
C105	1-124-443-00	s	ELECT 100uF 20% 10V
C108	1-123-875-11	s	ELECT 10uF 20% 50V
C112	1-123-382-00	s	ELECT 3.3uF 20% 100V
C113	1-123-369-00	s	ELECT 4.7uF 20% 63V
C116	1-124-791-11	s	ELECT 1uF 20% 50V
C117	1-130-480-00	s	MYLAR 0.0056uF 5% 50V
C118	1-124-446-11	s	ELECT 47uF 20% 10V
C122	1-124-443-00	s	ELECT 100uF 20% 10V
C125	1-123-875-11	s	ELECT 10uF 20% 50V
C129	1-123-382-00	s	ELECT 3.3uF 20% 100V
C130	1-123-369-00	s	ELECT 4.7uF 20% 63V
C132	1-124-791-11	s	ELECT 1uF 20% 50V
C133	1-130-480-00	s	MYLAR 0.0056uF 5% 50V
C134	1-124-446-11	s	ELECT 47uF 20% 10V
C135	1-124-443-00	s	ELECT 100uF 20% 10V
C137	1-126-233-11	s	ELECT 22uF 20% 50V
C139	1-130-495-00	s	MYLAR 0.1uF 5% 50V
C140	1-130-495-00	s	MYLAR 0.1uF 5% 50V
C202	1-124-443-00	s	ELECT 100uF 20% 10V
C205	1-124-443-00	s	ELECT 100uF 20% 10V
C208	1-123-875-11	s	ELECT 10uF 20% 50V
C212	1-123-382-00	s	ELECT 3.3uF 20% 100V
C213	1-123-369-00	s	ELECT 4.7uF 20% 63V
C216	1-124-791-11	s	ELECT 1uF 20% 50V
C217	1-130-480-00	s	MYLAR 0.0056uF 5% 50V
C218	1-124-446-11	s	ELECT 47uF 20% 10V
C222	1-124-443-00	s	ELECT 100uF 20% 10V
C225	1-123-875-11	s	ELECT 10uF 20% 50V
C229	1-123-382-00	s	ELECT 3.3uF 20% 100V
C230	1-123-369-00	s	ELECT 4.7uF 20% 63V
C232	1-124-791-11	s	ELECT 1uF 20% 50V
C233	1-130-480-00	s	MYLAR 0.0056uF 5% 50V
C234	1-124-446-11	s	ELECT 47uF 20% 10V
C235	1-124-638-11	s	ELECT 22uF 20% 10V
C238	1-130-495-00	s	MYLAR 0.1uF 5% 50V
C239	1-130-495-00	s	MYLAR 0.1uF 5% 50V
C305	1-126-233-11	s	ELECT 22uF 20% 50V
C316	1-126-233-11	s	ELECT 22uF 20% 50V
C318	1-124-443-00	s	ELECT 100uF 20% 10V
C321	1-124-446-11	s	ELECT 47uF 20% 10V
C323	1-126-233-11	s	ELECT 22uF 20% 50V
C405	1-126-233-11	s	ELECT 22uF 20% 50V

NOTE: Please see pages 19-51 and 19-52 for the parts that are not listed in the part list.

(AFM-1 BOARD)

Ref. No. or Q'ty	Part No.	SP	Description
C416	1-126-233-11	s	ELECT 22uF 20% 50V
C418	1-124-443-00	s	ELECT 100uF 20% 10V
C421	1-124-446-11	s	ELECT 47uF 20% 10V
C423	1-126-233-11	s	ELECT 22uF 20% 50V
C501	1-124-446-11	s	ELECT 47uF 20% 10V
C502	1-124-443-00	s	ELECT 100uF 20% 10V
C503	1-124-443-00	s	ELECT 100uF 20% 10V
C504	1-124-443-00	s	ELECT 100uF 20% 10V
C505	1-130-490-11	s	MYLAR 0.039uF 5% 50V
C506	1-124-446-11	s	ELECT 47uF 20% 10V
C507	1-124-446-11	s	ELECT 47uF 20% 10V
C508	1-130-479-00	s	MYLAR 0.0047uF 5% 50V
C509	1-107-026-00	s	MICA 5.1PF 500V
C511	1-131-370-00	s	TANTALUM 6.8uF 10% 16V
C512	1-130-482-00	s	MYLAR 0.0082uF 5% 50V
C513	1-123-875-11	s	ELECT 10uF 20% 50V
C514	1-131-343-00	s	TANTALUM 0.22uF 10% 35V
C516	1-124-443-00	s	ELECT 100uF 20% 10V
C517	1-124-446-11	s	ELECT 47uF 20% 10V
C518	1-124-443-00	s	ELECT 100uF 20% 10V
C519	1-124-443-00	s	ELECT 100uF 20% 10V
C520	1-130-490-11	s	MYLAR 0.039uF 5% 50V
C522	1-124-446-11	s	ELECT 47uF 20% 10V
C523	1-124-446-11	s	ELECT 47uF 20% 10V
C524	1-107-026-00	s	MICA 5.1PF 500V
C525	1-130-479-00	s	MYLAR 0.0047uF 5% 50V
C527	1-130-482-00	s	MYLAR 0.0082uF 5% 50V
C528	1-131-370-00	s	TANTALUM 6.8uF 10% 16V
C529	1-123-875-11	s	ELECT 10uF 20% 50V
C530	1-131-343-00	s	TANTALUM 0.22uF 10% 35V
C532	1-124-443-00	s	ELECT 100uF 20% 10V
C533	1-124-443-00	s	ELECT 100uF 20% 10V
C601	1-124-443-00	s	ELECT 100uF 20% 10V
C603	1-124-443-00	s	ELECT 100uF 20% 10V
C701	1-126-103-11	s	ELECT 470uF 20% 16V
C705	1-124-119-00	s	ELECT 330uF 20% 16V
C706	1-126-103-11	s	ELECT 470uF 20% 16V
C708	1-126-103-11	s	ELECT 470uF 20% 16V
C712	1-124-119-00	s	ELECT 330uF 20% 16V
C713	1-126-103-11	s	ELECT 470uF 20% 16V
C715	1-124-472-11	s	ELECT 470uF 20% 10V
C717	1-124-472-11	s	ELECT 470uF 20% 10V
C730	1-124-120-11	s	ELECT 220uF 20% 25V
C901	1-124-925-11	s	ELECT 2.2uF 20% 100V
C902	1-126-233-11	s	ELECT 22uF 20% 50V
C903	1-126-233-11	s	ELECT 22uF 20% 50V
C904	1-126-233-11	s	ELECT 22uF 20% 50V
C905	1-126-233-11	s	ELECT 22uF 20% 50V
C906	1-164-182-11	s	CERAMIC CHIP 3300PF 10% 100V
CN202	1-506-748-11	s	CONNECTOR, DIN 96P, MALE
D101	8-719-800-76	s	DIODE 1SS226
D102	8-719-800-76	s	DIODE 1SS226
D201	8-719-800-76	s	DIODE 1SS226
D202	8-719-800-76	s	DIODE 1SS226
D301	8-719-914-11	s	DIODE HZ4ALL

(AFM-1 BOARD)

Ref. No. or Q'ty	Part No.	SP	Description
D302	8-719-914-11	s	DIODE HZ4ALL
D401	8-719-914-11	s	DIODE HZ4ALL
D402	8-719-914-11	s	DIODE HZ4ALL
D501	8-719-910-61	s	DIODE HZ6A1L
D502	8-719-910-68	s	DIODE HZ6C2L
D901	8-719-104-34	s	DIODE 1S2835
D902	8-719-104-34	s	DIODE 1S2835
FL3	1-236-012-11	s	FILTER, BANDPASS 310KHz
FL4	1-236-013-11	s	FILTER, BANDPASS 540KHz
FL5	1-236-013-11	s	FILTER, BANDPASS 540KHz
FL6	1-236-012-11	s	FILTER, BANDPASS 310KHz
FL7	1-236-012-11	s	FILTER, BANDPASS 310KHz
FL8	1-236-013-11	s	FILTER, BANDPASS 540KHz
FL9	1-236-003-11	s	FILTER, LOW-PASS
IC101	8-759-403-77	s	IC AN3922NK
IC2	8-759-403-78	s	IC AN3920K
IC102	8-759-403-77	s	IC AN3922NK
IC103	8-759-009-07	s	IC MC14053BF
IC104	8-759-981-54	s	IC RC2041MD
IC201	8-759-403-77	s	IC AN3922NK
IC202	8-759-403-77	s	IC AN3922NK
IC301	8-759-981-54	s	IC RC2041MD
IC303	8-759-981-54	s	IC RC2041MD
IC304	8-759-982-04	s	IC RC5532M
IC401	8-759-981-54	s	IC RC2041MD
IC403	8-759-981-54	s	IC RC2041MD
IC404	8-759-982-04	s	IC RC5532M
IC501	8-752-009-90	s	IC CX20099
IC502	8-759-981-54	s	IC RC2041MD
IC701	8-759-008-79	s	IC MC14011BF
IC702	8-759-009-11	s	IC MC14070BF
IC703	8-759-205-78	s	IC TC504013BF
IC704	8-759-009-51	s	IC MC14538BF
IC705	8-759-009-51	s	IC MC14538BF
IC706	8-759-008-74	s	IC MC14001BF
IC707	8-759-008-79	s	IC MC14011BF
IC710	8-759-982-05	s	IC RC7805FA
L102	1-410-064-11	s	INDUCTOR 2.7mH
L103	1-410-064-11	s	INDUCTOR 2.7mH
L202	1-410-064-11	s	INDUCTOR 2.7mH
L203	1-410-064-11	s	INDUCTOR 2.7mH
L701	1-459-155-00	s	COIL 45uH
L702	1-459-155-00	s	COIL 45uH
Q1	8-729-271-22	s	TRANSISTOR 2SC2712-G
Q3	8-729-271-22	s	TRANSISTOR 2SC2712-G
Q5	8-729-901-03	s	TRANSISTOR DTC144WK
Q6	8-729-901-03	s	TRANSISTOR DTC144WK
Q101	8-729-901-03	s	TRANSISTOR DTC144WK
Q201	8-729-901-03	s	TRANSISTOR DTC144WK
Q301	8-769-401-89	s	TRANSISTOR TX429M
Q302	8-769-401-89	s	TRANSISTOR TX429M
Q303	8-769-401-89	s	TRANSISTOR TX429M
Q304	8-769-401-89	s	TRANSISTOR TX429M

NOTE: Please see pages 19-51 and 19-52 for the parts that are not listed in the part list.

(AFM-1 BOARD)

Ref. No. or Q'ty	Part No.	SP	Description
Q401	8-769-401-89	s	TRANSISTOR TX429M
Q402	8-769-401-89	s	TRANSISTOR TX429M
Q403	8-769-401-89	s	TRANSISTOR TX429M
Q404	8-769-401-89	s	TRANSISTOR TX429M
Q601	8-729-271-22	s	TRANSISTOR 2SC2712-G
Q602	8-729-271-22	s	TRANSISTOR 2SC2712-G
Q603	8-729-271-22	s	TRANSISTOR 2SC2712-G
Q604	8-729-271-22	s	TRANSISTOR 2SC2712-G
Q605	8-729-901-03	s	TRANSISTOR DTC144WK
Q606	8-729-271-22	s	TRANSISTOR 2SC2712-G
Q607	8-729-271-22	s	TRANSISTOR 2SC2712-G
Q608	8-729-271-22	s	TRANSISTOR 2SC2712-G
Q701	8-729-177-33	s	TRANSISTOR 2SD773-4
Q702	8-729-113-33	s	TRANSISTOR 2SB733-4
Q703	8-729-901-05	s	TRANSISTOR DTA124EK
Q704	8-729-901-03	s	TRANSISTOR DTC144WK
Q705	8-729-901-05	s	TRANSISTOR DTA124EK
Q706	8-729-901-03	s	TRANSISTOR DTC144WK
Q707	8-729-901-03	s	TRANSISTOR DTC144WK
Q901	8-729-271-22	s	TRANSISTOR 2SC2712-G
Q902	8-729-216-22	s	TRANSISTOR 2SA1162
Q903	8-729-202-38	s	TRANSISTOR 2SC3326N
Q904	8-729-202-38	s	TRANSISTOR 2SC3326N
R3	1-216-649-11	s	METAL, CHIP 820 0.5% 1/10W
R8	1-216-649-11	s	METAL, CHIP 820 0.5% 1/10W
R12	1-216-679-11	s	METAL, CHIP 15K 0.5% 1/10W
R13	1-216-685-11	s	METAL, CHIP 27K 0.5% 1/10W
R15	1-216-657-11	s	METAL, CHIP 1.8K 0.5% 1/10W
R16	1-216-657-11	s	METAL, CHIP 1.8K 0.5% 1/10W
R17	1-216-657-11	s	METAL, CHIP 1.8K 0.5% 1/10W
R18	1-216-657-11	s	METAL, CHIP 1.8K 0.5% 1/10W
R20	1-216-679-11	s	METAL, CHIP 15K 0.5% 1/10W
R21	1-216-685-11	s	METAL, CHIP 27K 0.5% 1/10W
R23	1-216-657-11	s	METAL, CHIP 1.8K 0.5% 1/10W
R24	1-216-657-11	s	METAL, CHIP 1.8K 0.5% 1/10W
R25	1-216-657-11	s	METAL, CHIP 1.8K 0.5% 1/10W
R26	1-216-657-11	s	METAL, CHIP 1.8K 0.5% 1/10W
R101	1-216-675-11	s	METAL, CHIP 10K 0.5% 1/10W
R103	1-216-659-11	s	METAL, CHIP 2.2K 0.5% 1/10W
R108	1-216-675-11	s	METAL, CHIP 10K 0.5% 1/10W
R110	1-216-659-11	s	METAL, CHIP 2.2K 0.5% 1/10W
R115	1-216-655-11	s	METAL, CHIP 1.5K 0.5% 1/10W
R116	1-216-655-11	s	METAL, CHIP 1.5K 0.5% 1/10W
R120	1-216-663-11	s	METAL, CHIP 3.3K 0.5% 1/10W
R121	1-216-655-11	s	METAL, CHIP 1.5K 0.5% 1/10W
R130	1-216-644-11	s	METAL, CHIP 510 0.5% 1/10W
R131	1-216-644-11	s	METAL, CHIP 510 0.5% 1/10W
R201	1-216-670-11	s	METAL, CHIP 6.2K 0.5% 1/10W
R203	1-216-659-11	s	METAL, CHIP 2.2K 0.5% 1/10W
R208	1-216-670-11	s	METAL, CHIP 6.2K 0.5% 1/10W
R210	1-216-659-11	s	METAL, CHIP 2.2K 0.5% 1/10W
R215	1-216-655-11	s	METAL, CHIP 1.5K 0.5% 1/10W
R216	1-216-655-11	s	METAL, CHIP 1.5K 0.5% 1/10W
R220	1-216-663-11	s	METAL, CHIP 3.3K 0.5% 1/10W
R221	1-216-655-11	s	METAL, CHIP 1.5K 0.5% 1/10W
R314	1-216-666-11	s	METAL, CHIP 4.3K 0.5% 1/10W

(AFM-1 BOARD)

Ref. No. or Q'ty	Part No.	SP	Description
R323	1-216-664-11	s	METAL, CHIP 3.6K 0.5% 1/10W
R324	1-216-671-11	s	METAL, CHIP 6.8K 0.5% 1/10W
R327	1-216-663-11	s	METAL, CHIP 3.3K 0.5% 1/10W
R328	1-216-671-11	s	METAL, CHIP 6.8K 0.5% 1/10W
R350	1-216-624-11	s	METAL, CHIP 75 0.5% 1/10W
R414	1-216-666-11	s	METAL, CHIP 4.3K 0.5% 1/10W
R423	1-216-664-11	s	METAL, CHIP 3.6K 0.5% 1/10W
R424	1-216-671-11	s	METAL, CHIP 6.8K 0.5% 1/10W
R427	1-216-663-11	s	METAL, CHIP 3.3K 0.5% 1/10W
R428	1-216-671-11	s	METAL, CHIP 6.8K 0.5% 1/10W
R450	1-216-624-11	s	METAL, CHIP 75 0.5% 1/10W
R501	1-216-663-11	s	METAL, CHIP 3.3K 0.5% 1/10W
R504	1-216-661-11	s	METAL, CHIP 2.7K 0.5% 1/10W
R505	1-216-647-11	s	METAL, CHIP 680 0.5% 1/10W
R506	1-216-659-11	s	METAL, CHIP 2.2K 0.5% 1/10W
R508	1-216-665-11	s	METAL, CHIP 3.9K 0.5% 1/10W
R509	1-216-677-11	s	METAL, CHIP 12K 0.5% 1/10W
R511	1-216-663-11	s	METAL, CHIP 3.3K 0.5% 1/10W
R512	1-216-661-11	s	METAL, CHIP 2.7K 0.5% 1/10W
R513	1-216-663-11	s	METAL, CHIP 3.3K 0.5% 1/10W
R515	1-216-663-11	s	METAL, CHIP 3.3K 0.5% 1/10W
R519	1-216-661-11	s	METAL, CHIP 2.7K 0.5% 1/10W
R520	1-216-659-11	s	METAL, CHIP 2.2K 0.5% 1/10W
R521	1-216-647-11	s	METAL, CHIP 680 0.5% 1/10W
R522	1-216-677-11	s	METAL, CHIP 12K 0.5% 1/10W
R523	1-216-665-11	s	METAL, CHIP 3.9K 0.5% 1/10W
R524	1-216-661-11	s	METAL, CHIP 2.7K 0.5% 1/10W
R525	1-216-663-11	s	METAL, CHIP 3.3K 0.5% 1/10W
R526	1-216-663-11	s	METAL, CHIP 3.3K 0.5% 1/10W
R527	1-216-669-11	s	METAL, CHIP 5.6K 0.5% 1/10W
R530	1-216-691-11	s	METAL, CHIP 47K 0.5% 1/10W
R531	1-216-668-11	s	METAL, CHIP 5.1K 0.5% 1/10W
R532	1-216-691-11	s	METAL, CHIP 47K 0.5% 1/10W
R533	1-216-668-11	s	METAL, CHIP 5.1K 0.5% 1/10W
R603	1-216-657-11	s	METAL, CHIP 1.8K 0.5% 1/10W
R604	1-216-657-11	s	METAL, CHIP 1.8K 0.5% 1/10W
R606	1-216-651-11	s	METAL, CHIP 1K 0.5% 1/10W
R607	1-216-651-11	s	METAL, CHIP 1K 0.5% 1/10W
R617	1-216-657-11	s	METAL, CHIP 1.8K 0.5% 1/10W
R618	1-216-657-11	s	METAL, CHIP 1.8K 0.5% 1/10W
R707	1-216-692-11	s	METAL, CHIP 51K 0.5% 1/10W
R708	1-216-692-11	s	METAL, CHIP 51K 0.5% 1/10W
R709	1-216-679-11	s	METAL, CHIP 15K 0.5% 1/10W
R718	1-216-682-11	s	METAL, CHIP 20K 0.5% 1/10W
R719	1-216-682-11	s	METAL, CHIP 20K 0.5% 1/10W
R721	1-216-682-11	s	METAL, CHIP 20K 0.5% 1/10W
RV2	1-237-520-21	s	RES, ADJ, METAL 50K
RV4	1-237-520-21	s	RES, ADJ, METAL 50K
RV5	1-237-519-21	s	RES, ADJ, METAL 20K
RV6	1-237-519-21	s	RES, ADJ, METAL 20K
RV101	1-237-516-21	s	RES, ADJ, METAL 2K
RV102	1-237-517-21	s	RES, ADJ, METAL 5K
RV103	1-237-516-21	s	RES, ADJ, METAL 2K
RV104	1-224-935-00	s	RES, VAR METAL 200
RV105	1-237-519-21	s	RES, ADJ, METAL 20K
RV201	1-237-516-21	s	RES, ADJ, METAL 2K

NOTE: Please see pages 19-51 and 19-52 for the parts that are not listed in the part list.

(AFM-1 BOARD)

Ref. No. or Q'ty	Part No.	SP	Description
RV202	1-237-517-21	s	RES, ADJ, METAL 5K
RV203	1-237-516-21	s	RES, ADJ, METAL 2K
RV204	1-224-935-00	s	RES, VAR METAL 200
RV205	1-237-519-21	s	RES, ADJ, METAL 20K
RV501	1-237-514-21	s	RES, ADJ, METAL 500
RV502	1-237-514-21	s	RES, ADJ, METAL 500
RV602	1-237-517-21	s	RES, ADJ, METAL 5K
RV603	1-237-519-21	s	RES, ADJ, METAL 20K
S1	1-570-857-11	s	SWITCH, SLIDE

AU-75P BOARD

Ref. No. or Q'ty	Part No.	SP	Description
1pc	A-6713-310-A	o	MOUNTED CIRCUIT BOARD, AU-75P
This board includes DUS-295 board. See "DUS-295 BOARD" for details of it.			
2pcs	7-622-207-05	s	N 2.6, TYPE 2
2pcs	7-628-254-30	s	SCREW +PS 2.6X10
C1	1-124-119-00	s	ELECT 330uF 20% 16V
C2	1-124-119-00	s	ELECT 330uF 20% 16V
C9	1-124-119-00	s	ELECT 330uF 20% 16V
C10	1-124-119-00	s	ELECT 330uF 20% 16V
C11	1-127-503-00	s	ALUMN SOLID 0.33uF 20% 25V
C12	1-127-503-00	s	ALUMN SOLID 0.33uF 20% 25V
C13	1-127-503-00	s	ALUMN SOLID 0.33uF 20% 25V
C14	1-127-503-00	s	ALUMN SOLID 0.33uF 20% 25V
C15	1-124-119-00	s	ELECT 330uF 20% 16V
C17	1-124-119-00	s	ELECT 330uF 20% 16V
C101	1-124-657-00	s	ELECT, NONPOLAR 10uF 20% 50V
C102	1-124-657-00	s	ELECT, NONPOLAR 10uF 20% 50V
C103	1-130-491-00	s	MYLAR 0.047uF 5% 50V
C108	1-124-598-11	s	ELECT 22uF 20% 25V
C109	1-127-501-00	s	ALUMN SOLID 0.15uF 20% 25V
C116	1-131-353-00	s	TANTALUM 10uF 10% 35V
C117	1-130-475-00	s	MYLAR 0.0022uF 5% 50V
C119	1-130-488-00	s	MYLAR 0.027uF 5% 50V
C120	1-130-476-00	s	MYLAR 0.0027uF 5% 50V
C121	1-130-473-00	s	MYLAR 0.0015uF 5% 50V
C126	1-131-353-00	s	TANTALUM 10uF 10% 35V
C127	1-130-477-00	s	MYLAR 0.0033uF 5% 50V
C130	1-130-489-00	s	MYLAR 0.033uF 5% 50V
C131	1-130-473-00	s	MYLAR 0.0015uF 5% 50V
C132	1-130-473-00	s	MYLAR 0.0015uF 5% 50V
C148	1-130-481-00	s	MYLAR 0.0068uF 5% 50V
C149	1-102-116-00	s	CERAMIC 680PF 10% 50V
C152	1-124-443-00	s	ELECT 100uF 20% 10V
C153	1-131-353-00	s	TANTALUM 10uF 10% 35V
C154	1-131-353-00	s	TANTALUM 10uF 10% 35V
C157	1-130-491-00	s	MYLAR 0.047uF 5% 50V
C161	1-130-477-00	s	MYLAR 0.0033uF 5% 50V
C162	1-130-477-00	s	MYLAR 0.0033uF 5% 50V
C201	1-124-657-00	s	ELECT, NONPOLAR 10uF 20% 50V
C202	1-124-657-00	s	ELECT, NONPOLAR 10uF 20% 50V
C203	1-130-491-00	s	MYLAR 0.047uF 5% 50V
C208	1-124-598-11	s	ELECT 22uF 20% 25V
C209	1-127-501-00	s	ALUMN SOLID 0.15uF 20% 25V
C216	1-131-353-00	s	TANTALUM 10uF 10% 35V
C217	1-130-475-00	s	MYLAR 0.0022uF 5% 50V
C219	1-130-488-00	s	MYLAR 0.027uF 5% 50V
C220	1-130-476-00	s	MYLAR 0.0027uF 5% 50V
C221	1-130-473-00	s	MYLAR 0.0015uF 5% 50V
C226	1-131-353-00	s	TANTALUM 10uF 10% 35V
C227	1-130-477-00	s	MYLAR 0.0033uF 5% 50V
C230	1-130-489-00	s	MYLAR 0.033uF 5% 50V
C231	1-130-473-00	s	MYLAR 0.0015uF 5% 50V
C232	1-130-473-00	s	MYLAR 0.0015uF 5% 50V
C248	1-130-481-00	s	MYLAR 0.0068uF 5% 50V
C249	1-102-116-00	s	CERAMIC 680PF 10% 50V

NOTE: Please see pages 19-51 and 19-52 for the parts that are not listed in the part list.

(AU-75P BOARD)

Ref. No. or Q'ty	Part No.	SP	Description
C252	1-124-443-00	s	ELECT 100uF 20% 10V
C253	1-131-353-00	s	TANTALUM 10uF 10% 35V
C254	1-131-353-00	s	TANTALUM 10uF 10% 35V
C257	1-130-491-00	s	MYLAR 0.047uF 5% 50V
C261	1-130-477-00	s	MYLAR 0.0033uF 5% 50V
C262	1-130-477-00	s	MYLAR 0.0033uF 5% 50V
C263	1-130-483-00	s	MYLAR 0.01uF 5% 50V
C301	1-131-353-00	s	TANTALUM 10uF 10% 35V
#C403	NOT IN USE		
C404	1-130-477-00	s	MYLAR 0.0033uF 5% 50V
C407	1-130-485-00	s	MYLAR 0.015uF 5% 50V
C410	1-130-487-00	s	MYLAR 0.022uF 5% 50V
#C503	NOT IN USE		
C504	1-130-477-00	s	MYLAR 0.0033uF 5% 50V
C507	1-130-485-00	s	MYLAR 0.015uF 5% 50V
C510	1-130-487-00	s	MYLAR 0.022uF 5% 50V
C811	1-130-487-00	s	MYLAR 0.022uF 5% 50V
C812	1-130-487-00	s	MYLAR 0.022uF 5% 50V
C813	1-130-487-00	s	MYLAR 0.022uF 5% 50V
C814	1-130-487-00	s	MYLAR 0.022uF 5% 50V
C815	1-130-487-00	s	MYLAR 0.022uF 5% 50V
C816	1-130-487-00	s	MYLAR 0.022uF 5% 50V
C817	1-130-473-00	s	MYLAR 0.0015uF 5% 50V
C821	1-130-487-00	s	MYLAR 0.022uF 5% 50V
C822	1-130-487-00	s	MYLAR 0.022uF 5% 50V
C823	1-130-483-00	s	MYLAR 0.01uF 5% 50V
C824	1-130-483-00	s	MYLAR 0.01uF 5% 50V
C825	1-130-487-00	s	MYLAR 0.022uF 5% 50V
C826	1-130-487-00	s	MYLAR 0.022uF 5% 50V
C827	1-130-473-00	s	MYLAR 0.0015uF 5% 50V
CN203	1-506-748-11	s	CONNECTOR, DIN 96P, MALE
D101	8-719-104-34	s	DIODE 1S2835
D102	8-719-104-34	s	DIODE 1S2835
D103	8-719-104-34	s	DIODE 1S2835
D104	8-719-104-34	s	DIODE 1S2835
D105	8-719-104-34	s	DIODE 1S2835
D106	8-719-104-34	s	DIODE 1S2835
D201	8-719-104-34	s	DIODE 1S2835
D202	8-719-104-34	s	DIODE 1S2835
D203	8-719-104-34	s	DIODE 1S2835
D204	8-719-104-34	s	DIODE 1S2835
D205	8-719-104-34	s	DIODE 1S2835
D206	8-719-104-34	s	DIODE 1S2835
D301	8-719-104-34	s	DIODE 1S2835
FL101	1-236-171-11	s	FILTER, LOW-PASS
FL201	1-236-171-11	s	FILTER, LOW-PASS
IC101	8-759-981-54	s	IC RC2041MD
IC104	8-741-115-20	s	IC BX1152
IC105	8-759-981-99	s	IC RC4560M
IC106	8-759-981-99	s	IC RC4560M
IC107	8-759-981-99	s	IC RC4560M
IC108	8-759-008-79	s	IC MC14011BF
IC109	8-759-982-04	s	IC RC5532M
IC110	8-759-981-54	s	IC RC2041MD
IC111	8-759-981-54	s	IC RC2041MD

(AU-75P BOARD)

Ref. No. or Q'ty	Part No.	SP	Description
IC112	8-741-134-32	s	IC BX1343A
IC201	8-759-981-54	s	IC RC2041MD
IC204	8-741-115-20	s	IC BX1152
IC205	8-759-981-99	s	IC RC4560M
IC206	8-759-981-99	s	IC RC4560M
IC207	8-759-981-99	s	IC RC4560M
IC208	8-759-008-79	s	IC MC14011BF
IC209	8-759-982-04	s	IC RC5532M
IC210	8-759-981-54	s	IC RC2041MD
IC211	8-759-981-54	s	IC RC2041MD
IC212	8-741-134-32	s	IC BX1343A
IC301	8-759-981-54	s	IC RC2041MD
IC302	8-759-009-19	s	IC MC14081BF
IC401	8-759-981-99	s	IC RC4560M
IC501	8-759-981-99	s	IC RC4560M
IC801	8-759-981-54	s	IC RC2041MD
IC811	8-759-981-54	s	IC RC2041MD
IC812	8-759-981-54	s	IC RC2041MD
IC821	8-759-981-54	s	IC RC2041MD
IC822	8-759-981-54	s	IC RC2041MD
L1	1-459-155-00	s	COIL 45uH
LV101	1-459-434-00	s	COIL, VAR 22mH
LV102	1-459-411-00	s	COIL, VAR 18mH
LV103	1-459-411-00	s	COIL, VAR 18mH
LV201	1-459-434-00	s	COIL, VAR 22mH
LV202	1-459-411-00	s	COIL, VAR 18mH
LV203	1-459-411-00	s	COIL, VAR 18mH
LV401	1-407-297-00	s	INDUCTOR, VAR 3.5mH
LV501	1-407-297-00	s	INDUCTOR, VAR 3.5mH
Q1	8-729-905-53	s	TRANSISTOR 2SD1055-R
Q2	8-729-205-95	s	TRANSISTOR 2SB822-R
Q3	8-759-982-21	s	IC RC78L05A
Q4	8-759-982-44	s	IC RC79L05A
Q101	8-769-401-89	s	TRANSISTOR TX429M
Q102	8-729-202-38	s	TRANSISTOR 2SC3326N
Q103	8-729-202-38	s	TRANSISTOR 2SC3326N
Q104	8-769-401-89	s	TRANSISTOR TX429M
Q105	8-729-271-22	s	TRANSISTOR 2SC2712-G
Q106	8-729-271-22	s	TRANSISTOR 2SC2712-G
Q107	8-729-178-55	s	TRANSISTOR 2SC2785-E
Q108	8-729-178-55	s	TRANSISTOR 2SC2785-E
Q109	8-729-901-06	s	TRANSISTOR DTA144EK
Q110	8-729-901-06	s	TRANSISTOR DTA144EK
Q111	8-729-216-22	s	TRANSISTOR 2SA1162
Q112	8-729-216-22	s	TRANSISTOR 2SA1162
Q113	8-729-901-06	s	TRANSISTOR DTA144EK
Q114	8-729-901-01	s	TRANSISTOR DTC144EK
Q115	8-729-901-06	s	TRANSISTOR DTA144EK
Q116	8-729-901-01	s	TRANSISTOR DTC144EK
Q201	8-769-401-89	s	TRANSISTOR TX429M
Q202	8-729-202-38	s	TRANSISTOR 2SC3326N
Q203	8-729-202-38	s	TRANSISTOR 2SC3326N
Q204	8-769-401-89	s	TRANSISTOR TX429M
Q205	8-729-271-22	s	TRANSISTOR 2SC2712-G
Q206	8-729-271-22	s	TRANSISTOR 2SC2712-G

NOTE: Please see pages 19-51 and 19-52 for the parts that are not listed in the part list.

(AU-75P BOARD)

Ref. No. or Q'ty	Part No.	SP	Description
Q207	8-729-178-55	s	TRANSISTOR 2SC2785-E
Q208	8-729-178-55	s	TRANSISTOR 2SC2785-E
Q209	8-729-901-06	s	TRANSISTOR DTA144EK
Q210	8-729-901-06	s	TRANSISTOR DTA144EK
Q211	8-729-216-22	s	TRANSISTOR 2SA1162
Q212	8-729-216-22	s	TRANSISTOR 2SA1162
Q213	8-729-901-06	s	TRANSISTOR DTA144EK
Q214	8-729-901-01	s	TRANSISTOR DTC144EK
Q215	8-729-901-06	s	TRANSISTOR DTA144EK
Q216	8-729-901-01	s	TRANSISTOR DTC144EK
Q301	8-729-202-38	s	TRANSISTOR 2SC3326N
Q302	8-729-901-06	s	TRANSISTOR DTA144EK
Q303	8-729-901-01	s	TRANSISTOR DTC144EK
Q304	8-729-901-06	s	TRANSISTOR DTA144EK
Q305	8-729-901-06	s	TRANSISTOR DTA144EK
R1	1-247-745-11	s	CARBON 330 5% 1/2W
R2	1-247-745-11	s	CARBON 330 5% 1/2W
R140	1-216-748-11	s	METAL, CHIP 39K 1% 1/10W
R142	1-216-694-11	s	METAL, CHIP 62K 0.5% 1/10W
R152	1-216-748-11	s	METAL, CHIP 39K 1% 1/10W
R154	1-216-673-11	s	METAL, CHIP 8.2K 0.5% 1/10W
R170	1-216-660-11	s	METAL, CHIP 2.4K 0.5% 1/10W
R171	1-216-698-11	s	METAL, CHIP 91K 0.5% 1/10W
R189	1-216-681-11	s	METAL, CHIP 18K 0.5% 1/10W
R191	1-216-681-11	s	METAL, CHIP 18K 0.5% 1/10W
R196	1-249-393-11	s	CARBON 10 5% 1/4W
R240	1-216-748-11	s	METAL, CHIP 39K 1% 1/10W
R242	1-216-694-11	s	METAL, CHIP 62K 0.5% 1/10W
R252	1-216-748-11	s	METAL, CHIP 39K 1% 1/10W
R254	1-216-673-11	s	METAL, CHIP 8.2K 0.5% 1/10W
R270	1-216-660-11	s	METAL, CHIP 2.4K 0.5% 1/10W
R271	1-216-698-11	s	METAL, CHIP 91K 0.5% 1/10W
R289	1-216-681-11	s	METAL, CHIP 18K 0.5% 1/10W
R291	1-216-681-11	s	METAL, CHIP 18K 0.5% 1/10W
R296	1-249-393-11	s	CARBON 10 5% 1/4W
#R404	1-216-097-00	s	METAL, CHIP 100K 5% 1/10W
R416	1-215-461-00	s	METAL 47K 1% 1/6W
#R504	1-216-097-00	s	METAL, CHIP 100K 5% 1/10W
R516	1-215-461-00	s	METAL 47K 1% 1/6W
R813	1-216-691-11	s	METAL, CHIP 47K 0.5% 1/10W
R814	1-216-683-11	s	METAL, CHIP 22K 0.5% 1/10W
#R815	1-215-473-00	s	METAL 150K 1% 1/6W
#R816	1-215-469-00	s	METAL 100K 1% 1/6W
R817	1-216-683-11	s	METAL, CHIP 22K 0.5% 1/10W
#R818	1-215-479-00	s	METAL 270K 1% 1/6W
#R819	1-216-681-11	s	METAL, CHIP 18K 0.5% 1/10W
R823	1-216-691-11	s	METAL, CHIP 47K 0.5% 1/10W
R824	1-216-683-11	s	METAL, CHIP 22K 0.5% 1/10W
#R825	1-215-477-00	s	METAL 220K 1% 1/6W
R826	1-215-485-00	s	METAL 470K 1% 1/6W
R827	1-216-683-11	s	METAL, CHIP 22K 0.5% 1/10W
#R828	1-215-485-00	s	METAL 470K 1% 1/6W
#R829	1-216-696-11	s	METAL, CHIP 75K 0.5% 1/10W
#R831	1-215-466-00	s	METAL 75K 1% 1/6W
R832	1-216-681-11	s	METAL, CHIP 18K 0.5% 1/10W
#R833	1-215-471-00	s	METAL 120K 1% 1/6W

(AU-75P BOARD)

Ref. No. or Q'ty	Part No.	SP	Description
#R834	1-216-689-11	s	METAL, CHIP 39K 0.5% 1/10W
R835	1-216-675-11	s	METAL, CHIP 10K 0.5% 1/10W
#R836	1-215-491-00	s	METAL 820K 1% 1/6W
#R837	1-216-695-11	s	METAL, CHIP 68K 0.5% 1/10W
R841	1-215-464-00	s	METAL 62K 1% 1/6W
R842	1-216-681-11	s	METAL, CHIP 18K 0.5% 1/10W
R844	1-216-697-11	s	METAL, CHIP 82K 0.5% 1/10W
R845	1-216-675-11	s	METAL, CHIP 10K 0.5% 1/10W
R846	1-215-477-00	s	METAL 220K 1% 1/6W
R847	1-216-679-11	s	METAL, CHIP 15K 0.5% 1/10W
RV101	1-237-503-21	s	RES, ADJ, METAL 10K
RV102	1-237-504-21	s	RES, ADJ, METAL 20K
RV103	1-237-517-21	s	RES, ADJ, METAL 5K
RV104	1-237-503-21	s	RES, ADJ, METAL 10K
RV105	1-237-504-21	s	RES, ADJ, METAL 20K
RV106	1-237-517-21	s	RES, ADJ, METAL 5K
RV107	1-237-520-21	s	RES, ADJ, METAL 50K
RV108	1-237-518-21	s	RES, ADJ, METAL 10K
RV110	1-237-518-21	s	RES, ADJ, METAL 10K
RV201	1-237-503-21	s	RES, ADJ, METAL 10K
RV202	1-237-504-21	s	RES, ADJ, METAL 20K
RV203	1-237-517-21	s	RES, ADJ, METAL 5K
RV204	1-237-503-21	s	RES, ADJ, METAL 10K
RV205	1-237-504-21	s	RES, ADJ, METAL 20K
RV206	1-237-517-21	s	RES, ADJ, METAL 5K
RV207	1-237-520-21	s	RES, ADJ, METAL 50K
RV208	1-237-518-21	s	RES, ADJ, METAL 10K
RV210	1-237-518-21	s	RES, ADJ, METAL 10K
RV211	1-228-464-00	s	RES, ADJ, CERMET 500K
RV401	1-237-518-21	s	RES, ADJ, METAL 10K
RV402	1-237-518-21	s	RES, ADJ, METAL 10K
RV403	1-237-518-21	s	RES, ADJ, METAL 10K
RV404	1-237-517-21	s	RES, ADJ, METAL 5K
RV405	1-237-515-21	s	RES, ADJ, METAL 1K
#RV406	NOT IN USE		
RV501	1-237-518-21	s	RES, ADJ, METAL 10K
RV502	1-237-518-21	s	RES, ADJ, METAL 10K
RV503	1-237-518-21	s	RES, ADJ, METAL 10K
RV504	1-237-517-21	s	RES, ADJ, METAL 5K
RV505	1-237-515-21	s	RES, ADJ, METAL 1K
#RV506	NOT IN USE		
RV811	1-237-517-21	s	RES, ADJ, METAL 5K
RV821	1-237-517-21	s	RES, ADJ, METAL 5K

NOTE: Please see pages 19-51 and 19-52 for the parts that are not listed in the part list.

AU-76PC BOARD

Ref. No. or Q'ty	Part No.	SP	Description
1pc	A-6713-391-A	o	MOUNTED CIRCUIT BOARD, AU-76PC
1pc	7-621-759-45	s	+PSW, 2.6X6
2pcs	7-622-207-05	s	N 2.6, TYPE 2
1pc	7-623-422-07	s	LW 3, TYPE B
2pcs	7-628-254-30	s	SCREW +PS 2.6X10
C1	1-126-103-11	s	ELECT 470uF 20% 16V
C2	1-126-103-11	s	ELECT 470uF 20% 16V
C5	1-126-103-11	s	ELECT 470uF 20% 16V
C6	1-126-103-11	s	ELECT 470uF 20% 16V
C7	1-127-503-00	s	ALUMN SOLID 0.33uF 20% 25V
C8	1-127-503-00	s	ALUMN SOLID 0.33uF 20% 25V
C9	1-127-503-00	s	ALUMN SOLID 0.33uF 20% 25V
C10	1-127-503-00	s	ALUMN SOLID 0.33uF 20% 25V
C11	1-124-443-00	s	ELECT 100uF 20% 10V
C13	1-124-443-00	s	ELECT 100uF 20% 10V
C16	1-124-120-11	s	ELECT 220uF 20% 25V
C17	1-124-443-00	s	ELECT 100uF 20% 10V
C18	1-124-443-00	s	ELECT 100uF 20% 10V
C106	1-131-381-00	s	TANTALUM 47uF 10% 10V
C108	1-130-485-00	s	MYLAR 0.015uF 5% 50V
C112	1-124-598-11	s	ELECT 22uF 20% 25V
C114	1-130-491-00	s	MYLAR 0.047uF 5% 50V
C115	1-130-491-00	s	MYLAR 0.047uF 5% 50V
C116	1-130-491-00	s	MYLAR 0.047uF 5% 50V
C122	1-124-443-00	s	ELECT 100uF 20% 10V
C123	1-124-443-00	s	ELECT 100uF 20% 10V
C135	1-131-353-00	s	TANTALUM 10uF 10% 35V
C136	1-109-631-00	s	MICA 330PF 2% 500V
C137	1-131-349-00	s	TANTALUM 2.2uF 10% 35V
C138	1-131-352-00	s	TANTALUM 6.8uF 10% 35V
C145	1-124-443-00	s	ELECT 100uF 20% 10V
C146	1-124-443-00	s	ELECT 100uF 20% 10V
C147	1-131-351-00	s	TANTALUM 4.7uF 10% 35V
C148	1-131-381-00	s	TANTALUM 47uF 10% 10V
C149	1-130-485-00	s	MYLAR 0.015uF 5% 50V
C155	1-124-234-00	s	ELECT 22uF 20% 16V
C156	1-130-493-00	s	MYLAR 0.068uF 5% 50V
C157	1-124-234-00	s	ELECT 22uF 20% 16V
C161	1-109-631-00	s	MICA 330PF 2% 500V
C166	1-131-344-00	s	TANTALUM 0.33uF 10% 35V
C167	1-123-332-00	s	ELECT 47uF 20% 25V
C168	1-162-900-11	s	CERAMIC 0.068uF 10% 50V
C206	1-131-381-00	s	TANTALUM 47uF 10% 10V
C208	1-130-485-00	s	MYLAR 0.015uF 5% 50V
C212	1-124-598-11	s	ELECT 22uF 20% 25V
C214	1-130-491-00	s	MYLAR 0.047uF 5% 50V
C215	1-130-491-00	s	MYLAR 0.047uF 5% 50V
C216	1-130-491-00	s	MYLAR 0.047uF 5% 50V
C235	1-131-353-00	s	TANTALUM 10uF 10% 35V
C236	1-109-631-00	s	MICA 330PF 2% 500V
C237	1-131-349-00	s	TANTALUM 2.2uF 10% 35V
C238	1-131-352-00	s	TANTALUM 6.8uF 10% 35V
C245	1-124-443-00	s	ELECT 100uF 20% 10V
C246	1-124-443-00	s	ELECT 100uF 20% 10V
C247	1-131-351-00	s	TANTALUM 4.7uF 10% 35V
C248	1-131-381-00	s	TANTALUM 47uF 10% 10V

(AU-76PC BOARD)

Ref. No. or Q'ty	Part No.	SP	Description
C249	1-130-485-00	s	MYLAR 0.015uF 5% 50V
C255	1-124-234-00	s	ELECT 22uF 20% 16V
C256	1-130-493-00	s	MYLAR 0.068uF 5% 50V
C257	1-124-234-00	s	ELECT 22uF 20% 16V
C261	1-109-631-00	s	MICA 330PF 2% 500V
C266	1-131-344-00	s	TANTALUM 0.33uF 10% 35V
C267	1-123-332-00	s	ELECT 47uF 20% 25V
C268	1-162-900-11	s	CERAMIC 0.068uF 10% 50V
C313	1-131-368-00	s	TANTALUM 3.3uF 10% 16V
C503	1-131-353-00	s	TANTALUM 10uF 10% 35V
C504	1-131-353-00	s	TANTALUM 10uF 10% 35V
C507	1-131-353-00	s	TANTALUM 10uF 10% 35V
C511	1-131-350-00	s	TANTALUM 3.3uF 10% 35V
C512	1-109-631-00	s	MICA 330PF 2% 500V
C513	1-109-630-00	s	MICA 270PF 2% 500V
C515	1-109-631-00	s	MICA 330PF 2% 500V
C516	1-131-353-00	s	TANTALUM 10uF 10% 35V
C517	1-131-341-00	s	TANTALUM 0.1uF 10% 35V
C518	1-131-347-00	s	TANTALUM 1uF 10% 35V
C603	1-131-353-00	s	TANTALUM 10uF 10% 35V
C604	1-131-353-00	s	TANTALUM 10uF 10% 35V
C607	1-131-353-00	s	TANTALUM 10uF 10% 35V
C611	1-131-350-00	s	TANTALUM 3.3uF 10% 35V
C612	1-109-631-00	s	MICA 330PF 2% 500V
C613	1-109-630-00	s	MICA 270PF 2% 500V
C615	1-109-631-00	s	MICA 330PF 2% 500V
C616	1-131-353-00	s	TANTALUM 10uF 10% 35V
C617	1-131-341-00	s	TANTALUM 0.1uF 10% 35V
C618	1-131-347-00	s	TANTALUM 1uF 10% 35V
C711	1-130-482-00	s	MYLAR 0.0082uF 5% 50V
C721	1-130-482-00	s	MYLAR 0.0082uF 5% 50V
C811	1-130-481-00	s	MYLAR 0.0068uF 5% 50V
C821	1-130-481-00	s	MYLAR 0.0068uF 5% 50V
CN204	1-506-748-11	s	CONNECTOR, DIN 96P, MALE
D1	8-719-200-02	s	DIODE 10E2
D2	8-719-200-02	s	DIODE 10E2
D3	8-719-104-34	s	DIODE 1S2835
D101	8-719-400-18	s	DIODE MA152WK
D102	8-719-400-18	s	DIODE MA152WK
D103	8-719-105-28	s	DIODE RD2.4M-B
D104	8-719-106-89	s	DIODE RD15M-B2
D105	8-719-106-89	s	DIODE RD15M-B2
D106	8-719-104-34	s	DIODE 1S2835
D201	8-719-400-18	s	DIODE MA152WK
D202	8-719-400-18	s	DIODE MA152WK
D203	8-719-105-28	s	DIODE RD2.4M-B
D204	8-719-106-89	s	DIODE RD15M-B2
D205	8-719-106-89	s	DIODE RD15M-B2
D206	8-719-104-34	s	DIODE 1S2835
D301	8-719-400-18	s	DIODE MA152WK
D302	8-719-400-18	s	DIODE MA152WK
D303	8-719-400-18	s	DIODE MA152WK
D501	8-719-400-18	s	DIODE MA152WK
D502	8-719-400-18	s	DIODE MA152WK
D503	8-719-400-18	s	DIODE MA152WK

NOTE: Please see pages 19-51 and 19-52 for the parts that are not listed in the part list.

(AU-76PC BOARD)

Ref. No. or Q'ty	Part No.	SP	Description
D601	8-719-400-18	s	DIODE MA152WK
D602	8-719-400-18	s	DIODE MA152WK
D603	8-719-400-18	s	DIODE MA152WK
D701	8-719-911-19	s	DIODE 1SS119
D702	8-719-911-19	s	DIODE 1SS119
FL101	1-236-171-11	s	FILTER, LOW-PASS
IC1	8-759-982-21	s	IC RC78L05A
IC2	8-759-982-44	s	IC RC79L05A
IC101	8-759-981-58	s	IC RC2043MD
IC103	8-741-148-90	s	IC SBX1489-01
IC104	8-759-982-04	s	IC RC5532M
IC106	8-759-981-58	s	IC RC2043MD
IC107	8-759-981-54	s	IC RC2041MD
IC201	8-759-981-58	s	IC RC2043MD
IC204	8-759-982-04	s	IC RC5532M
IC206	8-759-981-58	s	IC RC2043MD
IC207	8-759-981-54	s	IC RC2041MD
IC301	8-759-008-79	s	IC MC14011BF
IC302	8-759-008-74	s	IC MC14001BF
IC303	8-759-982-04	s	IC RC5532M
IC304	8-759-982-04	s	IC RC5532M
L3	1-459-155-00	s	COIL 45uH
L501	1-459-155-00	s	COIL 45uH
L601	1-459-155-00	s	COIL 45uH
LV102	1-407-299-11	s	INDUCTOR, VAR 5.6mH
LV103	1-407-298-00	s	INDUCTOR, VAR 4.5mH
LV104	1-407-299-11	s	INDUCTOR, VAR 5.6mH
LV202	1-407-299-11	s	INDUCTOR, VAR 5.6mH
LV203	1-407-298-00	s	INDUCTOR, VAR 4.5mH
LV204	1-407-299-11	s	INDUCTOR, VAR 5.6mH
Q1	8-729-216-22	s	TRANSISTOR 2SA1162
Q2	8-729-901-01	s	TRANSISTOR DTC144EK
Q003	8-729-905-53	s	TRANSISTOR 2SD1055-R
Q004	8-729-205-95	s	TRANSISTOR 2SB822-R
Q101	8-766-001-49	s	TRANSISTOR TX429M
Q102	8-766-001-49	s	TRANSISTOR TX429M
Q103	8-766-001-49	s	TRANSISTOR TX429M
Q104	8-729-202-38	s	TRANSISTOR 2SC3326N
Q105	8-729-216-22	s	TRANSISTOR 2SA1162
Q106	8-729-216-22	s	TRANSISTOR 2SA1162
Q108	8-729-901-06	s	TRANSISTOR DTA144EK
Q110	8-729-202-38	s	TRANSISTOR 2SC3326N
Q111	8-729-216-22	s	TRANSISTOR 2SA1162
Q112	8-729-109-44	s	TRANSISTOR 2SK94
Q113	8-729-271-22	s	TRANSISTOR 2SC2712-G
Q115	8-729-202-38	s	TRANSISTOR 2SC3326N
Q116	8-729-202-38	s	TRANSISTOR 2SC3326N
Q117	8-729-202-38	s	TRANSISTOR 2SC3326N
Q118	8-729-901-06	s	TRANSISTOR DTA144EK
Q119	8-729-901-01	s	TRANSISTOR DTC144EK
Q120	8-729-901-06	s	TRANSISTOR DTA144EK
Q121	8-729-901-01	s	TRANSISTOR DTC144EK
Q122	8-729-901-06	s	TRANSISTOR DTA144EK
Q123	8-729-901-01	s	TRANSISTOR DTC144EK
Q124	8-729-271-22	s	TRANSISTOR 2SC2712-G

(AU-76PC BOARD)

Ref. No. or Q'ty	Part No.	SP	Description
Q125	8-729-804-22	s	TRANSISTOR 2SA1319TP-T
Q126	8-729-803-89	s	TRANSISTOR 2SC3332-T
Q127	8-729-803-89	s	TRANSISTOR 2SC3332-T
Q201	8-766-001-49	s	TRANSISTOR TX429M
Q202	8-766-001-49	s	TRANSISTOR TX429M
Q203	8-766-001-49	s	TRANSISTOR TX429M
Q204	8-729-202-38	s	TRANSISTOR 2SC3326N
Q205	8-729-216-22	s	TRANSISTOR 2SA1162
Q206	8-729-216-22	s	TRANSISTOR 2SA1162
Q208	8-729-901-06	s	TRANSISTOR DTA144EK
Q210	8-729-202-38	s	TRANSISTOR 2SC3326N
Q211	8-729-216-22	s	TRANSISTOR 2SA1162
Q212	8-729-109-44	s	TRANSISTOR 2SK94
Q213	8-729-271-22	s	TRANSISTOR 2SC2712-G
Q215	8-729-202-38	s	TRANSISTOR 2SC3326N
Q216	8-729-202-38	s	TRANSISTOR 2SC3326N
Q217	8-729-202-38	s	TRANSISTOR 2SC3326N
Q218	8-729-901-06	s	TRANSISTOR DTA144EK
Q219	8-729-901-01	s	TRANSISTOR DTC144EK
Q220	8-729-901-06	s	TRANSISTOR DTA144EK
Q221	8-729-901-01	s	TRANSISTOR DTC144EK
Q222	8-729-901-06	s	TRANSISTOR DTA144EK
Q223	8-729-901-01	s	TRANSISTOR DTC144EK
Q224	8-729-271-22	s	TRANSISTOR 2SC2712-G
Q225	8-729-804-22	s	TRANSISTOR 2SA1319TP-T
Q226	8-729-803-89	s	TRANSISTOR 2SC3332-T
Q227	8-729-803-89	s	TRANSISTOR 2SC3332-T
Q301	8-729-901-06	s	TRANSISTOR DTA144EK
Q302	8-729-901-01	s	TRANSISTOR DTC144EK
Q303	8-729-901-06	s	TRANSISTOR DTA144EK
Q304	8-729-901-01	s	TRANSISTOR DTC144EK
Q305	8-729-901-06	s	TRANSISTOR DTA144EK
Q306	8-729-901-01	s	TRANSISTOR DTC144EK
Q307	8-729-901-06	s	TRANSISTOR DTA144EK
Q308	8-729-901-01	s	TRANSISTOR DTC144EK
Q309	8-729-901-06	s	TRANSISTOR DTA144EK
Q310	8-729-901-06	s	TRANSISTOR DTA144EK
Q311	8-729-901-06	s	TRANSISTOR DTA144EK
Q313	8-729-271-22	s	TRANSISTOR 2SC2712-G
Q314	8-729-216-22	s	TRANSISTOR 2SA1162
Q315	8-729-102-08	s	TRANSISTOR 2SC2223-T1F14
Q316	8-729-901-06	s	TRANSISTOR DTA144EK
Q317	8-729-901-01	s	TRANSISTOR DTC144EK
Q318	8-729-901-06	s	TRANSISTOR DTA144EK
Q501	8-729-304-92	s	TRANSISTOR 2SB649A
Q502	8-729-271-22	s	TRANSISTOR 2SC2712-G
Q503	8-729-901-01	s	TRANSISTOR DTC144EK
Q504	8-729-901-06	s	TRANSISTOR DTA144EK
Q505	8-729-901-01	s	TRANSISTOR DTC144EK
Q506	8-729-901-01	s	TRANSISTOR DTC144EK
Q507	8-729-905-53	s	TRANSISTOR 2SD1055-R
Q508	8-729-905-53	s	TRANSISTOR 2SD1055-R
Q509	8-729-905-53	s	TRANSISTOR 2SD1055-R
Q510	8-729-905-53	s	TRANSISTOR 2SD1055-R
Q511	8-729-119-78	s	TRANSISTOR 2SC2785-HFE
Q601	8-729-304-92	s	TRANSISTOR 2SB649A

NOTE: Please see pages 19-51 and 19-52 for the parts that are not listed in the part list.

(AU-76PC BOARD)

Ref. No. or Q'ty	Part No.	SP	Description
Q602	8-729-271-22	s	TRANSISTOR 2SC2712-G
Q603	8-729-901-01	s	TRANSISTOR DTC144EK
Q604	8-729-901-06	s	TRANSISTOR DTA144EK
Q605	8-729-901-01	s	TRANSISTOR DTC144EK
Q606	8-729-901-01	s	TRANSISTOR DTC144EK
Q607	8-729-905-53	s	TRANSISTOR 2SD1055-R
Q608	8-729-905-53	s	TRANSISTOR 2SD1055-R
Q609	8-729-905-53	s	TRANSISTOR 2SD1055-R
Q610	8-729-905-53	s	TRANSISTOR 2SD1055-R
Q611	8-729-119-78	s	TRANSISTOR 2SC2785-HFE
Q701	8-729-901-01	s	TRANSISTOR DTC144EK
Q711	8-729-109-44	s	TRANSISTOR 2SK94
Q712	8-729-901-01	s	TRANSISTOR DTC144EK
Q713	8-729-202-38	s	TRANSISTOR 2SC3326N
Q721	8-729-109-44	s	TRANSISTOR 2SK94
Q722	8-729-901-01	s	TRANSISTOR DTC144EK
Q723	8-729-202-38	s	TRANSISTOR 2SC3326N
Q801	8-729-901-01	s	TRANSISTOR DTC144EK
Q811	8-729-109-44	s	TRANSISTOR 2SK94
Q812	8-729-901-01	s	TRANSISTOR DTC144EK
Q813	8-729-202-38	s	TRANSISTOR 2SC3326N
Q821	8-729-109-44	s	TRANSISTOR 2SK94
Q822	8-729-901-01	s	TRANSISTOR DTC144EK
Q823	8-729-202-38	s	TRANSISTOR 2SC3326N
R101	1-216-631-11	s	METAL, CHIP 150 0.5% 1/10W
R102	1-216-633-11	s	METAL, CHIP 180 0.5% 1/10W
R105	1-216-699-11	s	METAL, CHIP 100K 0.5% 1/10W
R107	1-216-671-11	s	METAL, CHIP 6.8K 0.5% 1/10W
R159	1-216-603-11	s	METAL, CHIP 10 0.5% 1/10W
R166	1-216-697-11	s	METAL, CHIP 82K 0.5% 1/10W
R167	1-216-631-11	s	METAL, CHIP 150 0.5% 1/10W
R168	1-216-633-11	s	METAL, CHIP 180 0.5% 1/10W
R173	1-216-659-11	s	METAL, CHIP 2.2K 0.5% 1/10W
R183	1-216-671-11	s	METAL, CHIP 6.8K 0.5% 1/10W
R184	1-216-697-11	s	METAL, CHIP 82K 0.5% 1/10W
R185	1-216-699-11	s	METAL, CHIP 100K 0.5% 1/10W
R188	1-216-675-11	s	METAL, CHIP 10K 0.5% 1/10W
R189	1-216-659-11	s	METAL, CHIP 2.2K 0.5% 1/10W
R190	1-216-659-11	s	METAL, CHIP 2.2K 0.5% 1/10W
R195	1-216-650-11	s	METAL, CHIP 910 0.5% 1/10W
R196	1-216-668-11	s	METAL, CHIP 5.1K 0.5% 1/10W
R197	1-216-659-11	s	METAL, CHIP 2.2K 0.5% 1/10W
R198	1-216-659-11	s	METAL, CHIP 2.2K 0.5% 1/10W
R201	1-216-631-11	s	METAL, CHIP 150 0.5% 1/10W
R202	1-216-633-11	s	METAL, CHIP 180 0.5% 1/10W
R205	1-216-699-11	s	METAL, CHIP 100K 0.5% 1/10W
R207	1-216-671-11	s	METAL, CHIP 6.8K 0.5% 1/10W
R259	1-216-603-11	s	METAL, CHIP 10 0.5% 1/10W
R266	1-216-698-11	s	METAL, CHIP 91K 0.5% 1/10W
R267	1-216-631-11	s	METAL, CHIP 150 0.5% 1/10W
R268	1-216-633-11	s	METAL, CHIP 180 0.5% 1/10W
R273	1-216-659-11	s	METAL, CHIP 2.2K 0.5% 1/10W
R283	1-216-671-11	s	METAL, CHIP 6.8K 0.5% 1/10W
R284	1-216-698-11	s	METAL, CHIP 91K 0.5% 1/10W
R285	1-216-699-11	s	METAL, CHIP 100K 0.5% 1/10W
R288	1-216-675-11	s	METAL, CHIP 10K 0.5% 1/10W

(AU-76PC BOARD)

Ref. No. or Q'ty	Part No.	SP	Description
R289	1-216-659-11	s	METAL, CHIP 2.2K 0.5% 1/10W
R290	1-216-659-11	s	METAL, CHIP 2.2K 0.5% 1/10W
R295	1-216-650-11	s	METAL, CHIP 910 0.5% 1/10W
R296	1-216-668-11	s	METAL, CHIP 5.1K 0.5% 1/10W
R297	1-216-659-11	s	METAL, CHIP 2.2K 0.5% 1/10W
R298	1-216-659-11	s	METAL, CHIP 2.2K 0.5% 1/10W
R312	1-216-671-11	s	METAL, CHIP 6.8K 0.5% 1/10W
R313	1-216-655-11	s	METAL, CHIP 1.5K 0.5% 1/10W
R314	1-216-655-11	s	METAL, CHIP 1.5K 0.5% 1/10W
R315	1-216-671-11	s	METAL, CHIP 6.8K 0.5% 1/10W
R317	1-216-675-11	s	METAL, CHIP 10K 0.5% 1/10W
R319	1-216-640-11	s	METAL, CHIP 360 0.5% 1/10W
R320	1-216-695-11	s	METAL, CHIP 68K 0.5% 1/10W
R513	1-216-650-11	s	METAL, CHIP 910 0.5% 1/10W
R514	1-214-816-00	s	METAL 10 1% 1/2W
R516	1-216-650-11	s	METAL, CHIP 910 0.5% 1/10W
R524	1-214-816-00	s	METAL 10 1% 1/2W
R613	1-216-650-11	s	METAL, CHIP 910 0.5% 1/10W
R614	1-214-816-00	s	METAL 10 1% 1/2W
R616	1-216-650-11	s	METAL, CHIP 910 0.5% 1/10W
R624	1-214-816-00	s	METAL 10 1% 1/2W
R711	1-216-658-11	s	METAL, CHIP 2K 0.5% 1/10W
R714	1-216-675-11	s	METAL, CHIP 10K 0.5% 1/10W
R721	1-216-658-11	s	METAL, CHIP 2K 0.5% 1/10W
R724	1-216-675-11	s	METAL, CHIP 10K 0.5% 1/10W
R811	1-216-658-11	s	METAL, CHIP 2K 0.5% 1/10W
R814	1-216-675-11	s	METAL, CHIP 10K 0.5% 1/10W
R821	1-216-658-11	s	METAL, CHIP 2K 0.5% 1/10W
R824	1-216-675-11	s	METAL, CHIP 10K 0.5% 1/10W
RV101	1-237-522-21	s	RES, ADJ, METAL 200K
RV102	1-237-517-21	s	RES, ADJ, METAL 5K
RV103	1-237-518-21	s	RES, ADJ, METAL 10K
RV104	1-237-518-21	s	RES, ADJ, METAL 10K
RV105	1-237-520-21	s	RES, ADJ, METAL 50K
RV110	1-237-522-21	s	RES, ADJ, METAL 200K
RV111	1-237-517-21	s	RES, ADJ, METAL 5K
RV112	1-237-503-21	s	RES, ADJ, METAL 10K
RV113	1-237-514-21	s	RES, ADJ, METAL 500
RV114	1-237-514-21	s	RES, ADJ, METAL 500
RV115	1-237-520-21	s	RES, ADJ, METAL 50K
RV201	1-237-522-21	s	RES, ADJ, METAL 200K
RV202	1-237-517-21	s	RES, ADJ, METAL 5K
RV203	1-237-518-21	s	RES, ADJ, METAL 10K
RV204	1-237-518-21	s	RES, ADJ, METAL 10K
RV205	1-237-520-21	s	RES, ADJ, METAL 50K
RV210	1-237-522-21	s	RES, ADJ, METAL 200K
RV211	1-237-517-21	s	RES, ADJ, METAL 5K
RV212	1-237-503-21	s	RES, ADJ, METAL 10K
RV213	1-237-514-21	s	RES, ADJ, METAL 500
RV214	1-237-514-21	s	RES, ADJ, METAL 500
RV215	1-237-520-21	s	RES, ADJ, METAL 50K
RV301	1-237-519-21	s	RES, ADJ, METAL 20K
RV302	1-237-518-21	s	RES, ADJ, METAL 10K
RV501	1-237-504-21	s	RES, ADJ, METAL 20K
RV502	1-237-498-21	s	RES, ADJ, METAL FILM 200
RV601	1-237-504-21	s	RES, ADJ, METAL 20K

NOTE: Please see pages 19-51 and 19-52 for the parts that are not listed in the part list.

(AU-76PC BOARD)

Ref. No. or Q'ty	Part No.	SP	Description
RV602	1-237-498-21	s	RES, ADJ, METAL FILM 200
S101	1-570-598-11	s	SWITCH, DIP 4-CKT
S102	1-570-598-11	s	SWITCH, DIP 4-CKT
S201	1-570-598-11	s	SWITCH, DIP 4-CKT
S202	1-570-598-11	s	SWITCH, DIP 4-CKT
S301	1-552-509-00	s	SWITCH, DIP 1-CKT
T501	1-433-326-11	s	TRANSFORMER, BIAS OSCILLATION
T601	1-433-326-11	s	TRANSFORMER, BIAS OSCILLATION

BF-28 BOARD

Ref. No. or Q'ty	Part No.	SP	Description
1pc	A-6713-273-A	o	MOUNTED CIRCUIT BOARD, BF-28
C51	1-126-162-11	s	ELECT 3.3uF 20% 50V
C52	1-126-162-11	s	ELECT 3.3uF 20% 50V
C53	1-126-162-11	s	ELECT 3.3uF 20% 50V
C54	1-126-162-11	s	ELECT 3.3uF 20% 50V
C502	1-124-257-00	s	ELECT 2.2uF 20% 50V
C503	1-124-257-00	s	ELECT 2.2uF 20% 50V
C506	1-135-156-21	s	TANTALUM 6.8uF 20% 6.3V
C602	1-124-257-00	s	ELECT 2.2uF 20% 50V
C603	1-124-257-00	s	ELECT 2.2uF 20% 50V
C606	1-135-156-21	s	TANTALUM 6.8uF 20% 6.3V
C702	1-124-257-00	s	ELECT 2.2uF 20% 50V
C703	1-124-257-00	s	ELECT 2.2uF 20% 50V
C706	1-135-156-21	s	TANTALUM 6.8uF 20% 6.3V
C802	1-124-257-00	s	ELECT 2.2uF 20% 50V
C803	1-124-257-00	s	ELECT 2.2uF 20% 50V
C806	1-135-156-21	s	TANTALUM 6.8uF 20% 6.3V
C903	1-124-229-00	s	ELECT 33uF 20% 10V
C904	1-124-229-00	s	ELECT 33uF 20% 10V
C905	1-124-229-00	s	ELECT 33uF 20% 10V
C906	1-124-229-00	s	ELECT 33uF 20% 10V
C908	1-163-023-00	s	CERAMIC, CHIP 0.015uF 5% 50V
CN531	1-506-475-11	s	CONNECTOR, 10P, MALE
CN532	1-506-475-11	s	CONNECTOR, 10P, MALE
CN533	1-506-470-11	s	CONNECTOR, 5P, MALE
CN534	1-506-472-11	s	CONNECTOR, 7P, MALE
CN535	1-506-473-11	s	CONNECTOR, 8P, MALE
CN536	1-506-473-11	s	CONNECTOR, 8P, MALE
CN537	1-506-473-11	s	CONNECTOR, 8P, MALE
CN538	1-506-473-11	s	CONNECTOR, 8P, MALE
CN539	1-506-473-11	s	CONNECTOR, 8P, MALE
CN540	1-506-477-11	s	CONNECTOR, 12P, MALE
CN541	1-506-469-11	s	CONNECTOR, 4P, MALE
CN542	1-506-475-11	o	CONNECTOR, 10P, MALE
CN543	1-506-469-11	s	CONNECTOR, 4P, MALE
D51	8-719-104-34	s	DIODE 1S2835
D52	8-719-104-34	s	DIODE 1S2835
D53	8-719-104-34	s	DIODE 1S2835
D54	8-719-104-34	s	DIODE 1S2835
D55	8-719-104-34	s	DIODE 1S2835
D56	8-719-104-34	s	DIODE 1S2835
D501	8-719-800-76	s	DIODE 1SS226
D502	8-719-800-76	s	DIODE 1SS226
D503	8-719-400-18	s	DIODE MA152WK
D505	8-719-800-76	s	DIODE 1SS226
D506	8-719-800-76	s	DIODE 1SS226
D601	8-719-800-76	s	DIODE 1SS226
D602	8-719-800-76	s	DIODE 1SS226
D603	8-719-400-18	s	DIODE MA152WK
D605	8-719-800-76	s	DIODE 1SS226
D606	8-719-800-76	s	DIODE 1SS226
D701	8-719-800-76	s	DIODE 1SS226
D702	8-719-800-76	s	DIODE 1SS226
D703	8-719-400-18	s	DIODE MA152WK
D705	8-719-800-76	s	DIODE 1SS226

NOTE: Please see pages 19-51 and 19-52 for the parts that are not listed in the part list.

(BF-28 BOARD)

Ref. No. or Q'ty	Part No.	SP	Description
D706	8-719-800-76	s	DIODE 1SS226
D801	8-719-800-76	s	DIODE 1SS226
D802	8-719-800-76	s	DIODE 1SS226
D803	8-719-400-18	s	DIODE MA152WK
D805	8-719-800-76	s	DIODE 1SS226
D806	8-719-800-76	s	DIODE 1SS226
D901	8-719-104-34	s	DIODE 1S2835
D902	8-719-800-76	s	DIODE 1SS226
IC1	8-759-208-12	s	IC TC4016BPHB
IC51	8-759-981-65	s	IC LM2903M
IC52	8-759-981-65	s	IC LM2903M
IC53	8-759-981-65	s	IC LM2903M
IC54	8-759-981-65	s	IC LM2903M
IC101	8-759-981-54	s	IC RC2041MD
IC201	8-759-981-54	s	IC RC2041MD
IC301	8-759-981-54	s	IC RC2041MD
IC401	8-759-981-54	s	IC RC2041MD
IC501	8-759-981-54	s	IC RC2041MD
IC502	8-759-981-54	s	IC RC2041MD
IC503	8-759-981-99	s	IC RC4560M
IC601	8-759-981-54	s	IC RC2041MD
IC602	8-759-981-54	s	IC RC2041MD
IC701	8-759-981-54	s	IC RC2041MD
IC702	8-759-981-54	s	IC RC2041MD
IC703	8-759-981-99	s	IC RC4560M
IC801	8-759-981-54	s	IC RC2041MD
IC802	8-759-981-54	s	IC RC2041MD
IC901	8-759-009-06	s	IC MC14052BF
IC902	8-759-981-54	s	IC RC2041MD
IC903	8-759-009-11	s	IC MC14070BF
IC904	8-759-981-99	s	IC RC4560M
Q1	8-729-901-06	s	TRANSISTOR DTA144EK
Q2	8-729-901-01	s	TRANSISTOR DTC144EK
Q51	8-729-901-06	s	TRANSISTOR DTA144EK
Q52	8-729-901-01	s	TRANSISTOR DTC144EK
Q53	8-729-901-06	s	TRANSISTOR DTA144EK
Q54	8-729-901-01	s	TRANSISTOR DTC144EK
Q55	8-729-901-06	s	TRANSISTOR DTA144EK
Q56	8-729-901-01	s	TRANSISTOR DTC144EK
Q57	8-729-901-01	s	TRANSISTOR DTC144EK
Q58	8-729-202-38	s	TRANSISTOR 2SC3326N
Q501	8-729-202-38	s	TRANSISTOR 2SC3326N
Q601	8-729-202-38	s	TRANSISTOR 2SC3326N
Q701	8-729-202-38	s	TRANSISTOR 2SC3326N
Q801	8-729-202-38	s	TRANSISTOR 2SC3326N
Q901	8-729-905-53	s	TRANSISTOR 2SD1055-R
Q902	8-729-205-95	s	TRANSISTOR 2SB822-R
#Q903	8-729-801-46	s	TRANSISTOR 2SC3064
R51	1-216-696-11	s	METAL, CHIP 75K 0.5% 1/10W
R56	1-216-696-11	s	METAL, CHIP 75K 0.5% 1/10W
R78	1-216-685-11	s	METAL, CHIP 27K 0.5% 1/10W
R79	1-216-675-11	s	METAL, CHIP 10K 0.5% 1/10W
R503	1-216-686-11	s	METAL, CHIP 30K 0.5% 1/10W
R504	1-216-686-11	s	METAL, CHIP 30K 0.5% 1/10W
R505	1-216-686-11	s	METAL, CHIP 30K 0.5% 1/10W

(BF-28 BOARD)

Ref. No. or Q'ty	Part No.	SP	Description
R506	1-216-679-11	s	METAL, CHIP 15K 0.5% 1/10W
R507	1-216-686-11	s	METAL, CHIP 30K 0.5% 1/10W
R509	1-216-693-11	s	METAL, CHIP 56K 0.5% 1/10W
R510	1-216-748-11	s	METAL, CHIP 39K 1% 1/10W
R512	1-216-685-11	s	METAL, CHIP 27K 0.5% 1/10W
R513	1-216-689-11	s	METAL, CHIP 39K 0.5% 1/10W
R516	1-216-677-11	s	METAL, CHIP 12K 0.5% 1/10W
R521	1-216-675-11	s	METAL, CHIP 10K 0.5% 1/10W
R522	1-216-686-11	s	METAL, CHIP 30K 0.5% 1/10W
R603	1-216-686-11	s	METAL, CHIP 30K 0.5% 1/10W
R604	1-216-686-11	s	METAL, CHIP 30K 0.5% 1/10W
R605	1-216-686-11	s	METAL, CHIP 30K 0.5% 1/10W
R606	1-216-679-11	s	METAL, CHIP 15K 0.5% 1/10W
R607	1-216-686-11	s	METAL, CHIP 30K 0.5% 1/10W
R609	1-216-693-11	s	METAL, CHIP 56K 0.5% 1/10W
R610	1-216-748-11	s	METAL, CHIP 39K 1% 1/10W
R612	1-216-685-11	s	METAL, CHIP 27K 0.5% 1/10W
R613	1-216-689-11	s	METAL, CHIP 39K 0.5% 1/10W
R616	1-216-677-11	s	METAL, CHIP 12K 0.5% 1/10W
R621	1-216-675-11	s	METAL, CHIP 10K 0.5% 1/10W
R622	1-216-686-11	s	METAL, CHIP 30K 0.5% 1/10W
R703	1-216-686-11	s	METAL, CHIP 30K 0.5% 1/10W
R704	1-216-686-11	s	METAL, CHIP 30K 0.5% 1/10W
R705	1-216-686-11	s	METAL, CHIP 30K 0.5% 1/10W
R706	1-216-679-11	s	METAL, CHIP 15K 0.5% 1/10W
R707	1-216-686-11	s	METAL, CHIP 30K 0.5% 1/10W
R709	1-216-693-11	s	METAL, CHIP 56K 0.5% 1/10W
R710	1-216-748-11	s	METAL, CHIP 39K 1% 1/10W
R712	1-216-685-11	s	METAL, CHIP 27K 0.5% 1/10W
R713	1-216-689-11	s	METAL, CHIP 39K 0.5% 1/10W
R716	1-216-677-11	s	METAL, CHIP 12K 0.5% 1/10W
R721	1-216-675-11	s	METAL, CHIP 10K 0.5% 1/10W
R722	1-216-686-11	s	METAL, CHIP 30K 0.5% 1/10W
R803	1-216-686-11	s	METAL, CHIP 30K 0.5% 1/10W
R804	1-216-686-11	s	METAL, CHIP 30K 0.5% 1/10W
R805	1-216-686-11	s	METAL, CHIP 30K 0.5% 1/10W
R806	1-216-679-11	s	METAL, CHIP 15K 0.5% 1/10W
R807	1-216-686-11	s	METAL, CHIP 30K 0.5% 1/10W
R809	1-216-693-11	s	METAL, CHIP 56K 0.5% 1/10W
R810	1-216-748-11	s	METAL, CHIP 39K 1% 1/10W
R812	1-216-685-11	s	METAL, CHIP 27K 0.5% 1/10W
R813	1-216-689-11	s	METAL, CHIP 39K 0.5% 1/10W
R816	1-216-677-11	s	METAL, CHIP 12K 0.5% 1/10W
R821	1-216-675-11	s	METAL, CHIP 10K 0.5% 1/10W
R822	1-216-686-11	s	METAL, CHIP 30K 0.5% 1/10W
R921	1-216-686-11	s	METAL, CHIP 30K 0.5% 1/10W
R922	1-216-686-11	s	METAL, CHIP 30K 0.5% 1/10W
R923	1-216-686-11	s	METAL, CHIP 30K 0.5% 1/10W
R924	1-216-679-11	s	METAL, CHIP 15K 0.5% 1/10W
R925	1-216-686-11	s	METAL, CHIP 30K 0.5% 1/10W
RV101	1-237-502-21	s	RES, ADJ, METAL 5K
RV102	1-237-502-21	s	RES, ADJ, METAL 5K
RV201	1-237-502-21	s	RES, ADJ, METAL 5K
RV202	1-237-502-21	s	RES, ADJ, METAL 5K
RV301	1-237-502-21	s	RES, ADJ, METAL 5K
RV302	1-237-502-21	s	RES, ADJ, METAL 5K

NOTE: Please see pages 19-51 and 19-52 for the parts that are not listed in the part list.

(BF-28 BOARD)

Ref. No. or Q'ty	Part No.	SP	Description
RV401	1-237-502-21	s	RES, ADJ, METAL 5K
RV402	1-237-502-21	s	RES, ADJ, METAL 5K
RV501	1-237-518-21	s	RES, ADJ, METAL 10K
RV601	1-237-518-21	s	RES, ADJ, METAL 10K
RV701	1-237-518-21	s	RES, ADJ, METAL 10K
RV801	1-237-518-21	s	RES, ADJ, METAL 10K
RV901	1-237-519-21	s	RES, ADJ, METAL 20K
RV902	1-237-517-21	s	RES, ADJ, METAL 5K
RV903	1-237-518-21	s	RES, ADJ, METAL 10K

CCM-2 BOARD

Ref. No. or Q'ty	Part No.	SP	Description
1pc	1-623-198-11	o	PRINTED CIRCUIT BOARD, CCM-2
CN1	1-506-467-11	s	CONNECTOR, 2P, MALE
M008	1-541-376-11	s	MOTOR, DC MNR-7400A

CF-36P BOARD

Ref. No. or Q'ty	Part No.	SP	Description
This board is included in DEC-42P board.			
1pc	1-625-948-11	o	PRINTED CIRCUIT BOARD, CF-36
C647	1-130-483-00	s	MYLAR 0.01uF 5% 50V
C650	1-130-479-00	s	MYLAR 0.0047uF 5% 50V
C651	1-130-479-00	s	MYLAR 0.0047uF 5% 50V
C653	1-130-479-00	s	MYLAR 0.0047uF 5% 50V
C654	1-130-484-00	s	MYLAR 0.012uF 5% 50V
C655	1-130-479-00	s	MYLAR 0.0047uF 5% 50V
C659	1-126-154-11	s	ELECT 47uF 20% 6.3V
C680	1-162-714-11	s	CERAMIC 150PF 1% 50V
C681	1-162-708-11	s	CERAMIC 82PF 5% 50V
C739	1-135-159-21	s	TANTALUM, CHIP 10uF 10% 20V
C741	1-135-159-21	s	TANTALUM, CHIP 10uF 10% 20V
C742	1-135-159-21	s	TANTALUM, CHIP 10uF 10% 20V
C744	1-135-159-21	s	TANTALUM, CHIP 10uF 10% 20V
C745	1-135-159-21	s	TANTALUM, CHIP 10uF 10% 20V
CN501	1-563-889-11	o	CONNECTOR, 14P, FEMALE
CN502	1-565-061-11	o	CONNECTOR, 16P, FEMALE
D507	8-719-104-34	s	DIODE 1S2835
D550	8-719-911-19	s	DIODE 1SS119
D551	8-719-911-19	s	DIODE 1SS119
DL500	1-415-538-11	s	DELAY LINE 100ns
DL501	1-415-541-11	s	DELAY LINE 200ns
FB506	1-535-178-00	s	BEAD, FERRITE
FL500	1-236-091-11	s	FILTER, LOW-PASS
IC516	8-759-907-81	s	IC SN74LS221NS
IC517	8-759-907-81	s	IC SN74LS221NS
IC518	8-759-907-81	s	IC SN74LS221NS
IC519	8-759-009-07	s	IC MC14053BF
IC522	8-759-907-81	s	IC SN74LS221NS
IC523	8-759-930-57	s	IC SN74LS164NS
IC527	8-759-925-90	s	IC SN74HC74NS
IC528	8-759-907-81	s	IC SN74LS221NS
IC529	8-759-925-90	s	IC SN74HC74NS
IC530	8-759-941-27	s	IC MB4002PF
IC531	8-759-941-27	s	IC MB4002PF
IC549	8-759-927-46	s	IC SN74HC00NS
IC550	8-759-925-76	s	IC SN74HC08NS
IC551	8-759-925-90	s	IC SN74HC74NS
IC552	8-759-927-46	s	IC SN74HC00NS
L600	1-408-416-00	s	INDUCTOR 39uH
L601	1-408-416-00	s	INDUCTOR 39uH
Q514	8-729-202-38	s	TRANSISTOR 2SC3326N
Q515	8-729-271-22	s	TRANSISTOR 2SC2712-G
Q516	8-729-271-22	s	TRANSISTOR 2SC2712-G
Q517	8-729-271-22	s	TRANSISTOR 2SC2712-G
R633	1-216-671-11	s	METAL, CHIP 6.8K 0.5% 1/10W
R638	1-216-680-11	s	METAL, CHIP 16K 0.5% 1/10W
R640	1-216-680-11	s	METAL, CHIP 16K 0.5% 1/10W
R646	1-216-666-11	s	METAL, CHIP 4.3K 0.5% 1/10W
R647	1-216-675-11	s	METAL, CHIP 10K 0.5% 1/10W
R660	1-216-657-11	s	METAL, CHIP 1.8K 0.5% 1/10W

NOTE: Please see pages 19-51 and 19-52 for the parts that are not listed in the part list.

(CF-36P BOARD)

Ref. No. or Q'ty	Part No.	SP	Description
R663	1-216-653-11	s	METAL, CHIP 1.2K 0.5% 1/10W
R665	1-215-445-00	s	METAL 10K 1% 1/6W
R668	1-216-667-11	s	METAL, CHIP 4.7K 0.5% 1/10W
R673	1-216-667-11	s	METAL, CHIP 4.7K 0.5% 1/10W
R675	1-216-667-11	s	METAL, CHIP 4.7K 0.5% 1/10W
R678	1-216-683-11	s	METAL, CHIP 22K 0.5% 1/10W
R683	1-216-644-11	s	METAL, CHIP 510 0.5% 1/10W
R684	1-216-644-11	s	METAL, CHIP 510 0.5% 1/10W
R690	1-216-694-11	s	METAL, CHIP 62K 0.5% 1/10W
RV506	1-230-522-11	s	RES, ADJ, METAL 4.7K
RV507	1-230-522-11	s	RES, ADJ, METAL 4.7K
RV508	1-230-521-11	s	RES, ADJ, METAL 2.2K
RV509	1-230-522-11	s	RES, ADJ, METAL 4.7K
RV510	1-230-522-11	s	RES, ADJ, METAL 4.7K

CL-14 BOARD

Ref. No. or Q'ty	Part No.	SP	Description
1pc	1-622-602-11	o	PRINTED CIRCUIT BOARD, CL-14
1pc	1-559-265-11	o	WIRE, FLEXIBLE CARD
C1	1-161-051-00	s	CERAMIC 0.01uF 10% 50V
CN331	1-506-491-11	s	CONNECTOR, 12P, MALE
CN332	1-563-969-11	o	CONNECTOR, F.P.C 7P
CN333	1-506-482-11	s	CONNECTOR, 3P, MALE
CN334	1-506-482-11	s	CONNECTOR, 3P, MALE
CN335	1-506-485-11	s	CONNECTOR, 6P, MALE
CN336	1-506-482-11	s	CONNECTOR, 3P, MALE

CL-24 BOARD

Ref. No. or Q'ty	Part No.	SP	Description
1pc	A-6724-835-A	s	MOUNTED CIRCUIT BOARD, CL-24
1pc	1-635-029-11	o	PRINTED CIRCUIT BOARD, CL-24
D1	8-719-820-27	s	LED TLY-256, YEL
D2	8-719-820-27	s	LED TLY-256, YEL
D3	8-719-820-27	s	LED TLY-256, YEL
D4	8-719-820-27	s	LED TLY-256, YEL
D5	8-719-820-27	s	LED TLY-256, YEL
D6	8-719-820-27	s	LED TLY-256, YEL
R1	1-247-702-11	s	CARBON 150 5% 1/4W
R2	1-247-702-11	s	CARBON 150 5% 1/4W
R3	1-247-702-11	s	CARBON 150 5% 1/4W

NOTE: Please see pages 19-51 and 19-52 for the parts that are not listed in the part list.

CP-101P BOARD

Ref. No. or Q'ty	Part No.	SP	Description
1pc	A-6729-736-A	o	MOUNTED CIRCUIT BOARD, CP-101P
C2	1-161-055-00	s	CERAMIC 0.022uF 10% 50V
C3	1-161-055-00	s	CERAMIC 0.022uF 10% 50V
C5	1-161-055-00	s	CERAMIC 0.022uF 10% 50V
C6	1-161-055-00	s	CERAMIC 0.022uF 10% 50V
C7	1-161-055-00	s	CERAMIC 0.022uF 10% 50V
C9	1-161-055-00	s	CERAMIC 0.022uF 10% 50V
C51	1-161-055-00	s	CERAMIC 0.022uF 10% 50V
C53	1-161-055-00	s	CERAMIC 0.022uF 10% 50V
C101	1-124-910-11	s	ELECT 47uF 20% 50V
C102	1-130-471-00	s	MYLAR 0.001uF 5% 50V
C103	1-124-910-11	s	ELECT 47uF 20% 50V
C104	1-124-141-00	s	ELECT 330uF 20% 10V
C105	1-107-159-00	s	MICA 33PF 5% 500V
C106	1-107-159-00	s	MICA 33PF 5% 500V
C201	1-124-910-11	s	ELECT 47uF 20% 50V
C202	1-130-471-00	s	MYLAR 0.001uF 5% 50V
C203	1-124-910-11	s	ELECT 47uF 20% 50V
C204	1-124-141-00	s	ELECT 330uF 20% 10V
C205	1-107-159-00	s	MICA 33PF 5% 500V
C206	1-107-159-00	s	MICA 33PF 5% 500V
C301	1-124-910-11	s	ELECT 47uF 20% 50V
C302	1-130-471-00	s	MYLAR 0.001uF 5% 50V
C303	1-124-910-11	s	ELECT 47uF 20% 50V
C304	1-124-141-00	s	ELECT 330uF 20% 10V
C305	1-107-159-00	s	MICA 33PF 5% 500V
C306	1-107-159-00	s	MICA 33PF 5% 500V
C401	1-124-910-11	s	ELECT 47uF 20% 50V
C402	1-130-471-00	s	MYLAR 0.001uF 5% 50V
C403	1-124-910-11	s	ELECT 47uF 20% 50V
C404	1-124-141-00	s	ELECT 330uF 20% 10V
C405	1-107-159-00	s	MICA 33PF 5% 500V
C406	1-107-159-00	s	MICA 33PF 5% 500V
C421	1-126-103-11	s	ELECT 470uF 20% 16V
C422	1-126-103-11	s	ELECT 470uF 20% 16V
C423	1-126-103-11	s	ELECT 470uF 20% 16V
C424	1-126-103-11	s	ELECT 470uF 20% 16V
C425	1-130-491-00	s	MYLAR 0.047uF 5% 50V
C426	1-130-491-00	s	MYLAR 0.047uF 5% 50V
C427	1-102-106-00	s	CERAMIC 100PF 10% 50V
C428	1-102-106-00	s	CERAMIC 100PF 10% 50V
CN441	1-506-486-11	s	CONNECTOR, 7P, MALE
CN442	1-506-483-21	s	CONNECTOR, 4P, MALE
CN443	1-506-487-11	s	CONNECTOR, 8P, MALE
CN444	1-506-482-11	s	CONNECTOR, 3P, MALE
D101	8-719-910-95	s	DIODE HZ9B2L
D102	8-719-910-95	s	DIODE HZ9B2L
D103	8-719-910-95	s	DIODE HZ9B2L
D104	8-719-910-95	s	DIODE HZ9B2L
D201	8-719-910-95	s	DIODE HZ9B2L
D202	8-719-910-95	s	DIODE HZ9B2L
D203	8-719-910-95	s	DIODE HZ9B2L
D204	8-719-910-95	s	DIODE HZ9B2L
D301	8-719-910-95	s	DIODE HZ9B2L
D302	8-719-910-95	s	DIODE HZ9B2L

(CP-101P BOARD)

Ref. No. or Q'ty	Part No.	SP	Description
D303	8-719-910-95	s	DIODE HZ9B2L
D304	8-719-910-95	s	DIODE HZ9B2L
D401	8-719-910-95	s	DIODE HZ9B2L
D402	8-719-910-95	s	DIODE HZ9B2L
D403	8-719-910-95	s	DIODE HZ9B2L
D404	8-719-910-95	s	DIODE HZ9B2L
FB1	1-535-178-00	s	BEAD, FERRITE
FB2	1-535-178-00	s	BEAD, FERRITE
FB3	1-535-178-00	s	BEAD, FERRITE
FB4	1-535-178-00	s	BEAD, FERRITE
FB5	1-535-178-00	s	BEAD, FERRITE
FB6	1-535-178-00	s	BEAD, FERRITE
IC1	8-752-015-81	s	IC CX20158
IC2	8-752-015-81	s	IC CX20158
IC101	8-759-900-72	s	IC NE5532P
IC102	8-759-900-72	s	IC NE5532P
IC201	8-759-900-72	s	IC NE5532P
IC301	8-759-900-72	s	IC NE5532P
IC302	8-759-900-72	s	IC NE5532P
IC401	8-759-900-72	s	IC NE5532P
Q401	8-729-905-53	s	TRANSISTOR 2SD1055-R
Q402	8-729-205-95	s	TRANSISTOR 2SB822-R
R1	1-215-394-00	s	METAL 75 1% 1/6W
R4	1-215-393-00	s	METAL 68 1% 1/6W
R5	1-215-394-00	s	METAL 75 1% 1/6W
R8	1-215-393-00	s	METAL 68 1% 1/6W
R9	1-215-394-00	s	METAL 75 1% 1/6W
R101	1-215-424-00	s	METAL 1.3K 1% 1/6W
R102	1-215-423-00	s	METAL 1.2K 1% 1/6W
R103	1-215-438-00	s	METAL 5.1K 1% 1/6W
R104	1-215-438-00	s	METAL 5.1K 1% 1/6W
R105	1-215-407-00	s	METAL 270 1% 1/6W
R106	1-215-412-00	s	METAL 430 1% 1/6W
R107	1-215-416-00	s	METAL 620 1% 1/6W
R108	1-215-442-00	s	METAL 7.5K 1% 1/6W
R109	1-215-433-00	s	METAL 3.3K 1% 1/6W
R110	1-215-469-00	s	METAL 100K 1% 1/6W
R111	1-215-469-00	s	METAL 100K 1% 1/6W
R112	1-215-375-00	s	METAL 12 1% 1/6W
R113	1-215-387-00	s	METAL 39 1% 1/6W
R114	1-215-432-00	s	METAL 3K 1% 1/6W
R115	1-215-433-00	s	METAL 3.3K 1% 1/6W
R116	1-215-433-00	s	METAL 3.3K 1% 1/6W
R117	1-215-437-00	s	METAL 4.7K 1% 1/6W
R118	1-215-437-00	s	METAL 4.7K 1% 1/6W
R119	1-215-437-00	s	METAL 4.7K 1% 1/6W
R120	1-215-437-00	s	METAL 4.7K 1% 1/6W
R121	1-215-469-00	s	METAL 100K 1% 1/6W
R201	1-215-424-00	s	METAL 1.3K 1% 1/6W
R202	1-215-423-00	s	METAL 1.2K 1% 1/6W
R203	1-215-438-00	s	METAL 5.1K 1% 1/6W
R204	1-215-438-00	s	METAL 5.1K 1% 1/6W
R205	1-215-407-00	s	METAL 270 1% 1/6W
R206	1-215-412-00	s	METAL 430 1% 1/6W

NOTE: Please see pages 19-51 and 19-52 for the parts that are not listed in the part list.

(CP-101P BOARD)

Ref. No. or Q'ty	Part No.	SP	Description
R207	1-215-416-00	s	METAL 620 1% 1/6W
R208	1-215-442-00	s	METAL 7.5K 1% 1/6W
R209	1-215-433-00	s	METAL 3.3K 1% 1/6W
R210	1-215-469-00	s	METAL 100K 1% 1/6W
R211	1-215-469-00	s	METAL 100K 1% 1/6W
R212	1-215-375-00	s	METAL 12 1% 1/6W
R213	1-215-387-00	s	METAL 39 1% 1/6W
R214	1-215-432-00	s	METAL 3K 1% 1/6W
R215	1-215-433-00	s	METAL 3.3K 1% 1/6W
R216	1-215-433-00	s	METAL 3.3K 1% 1/6W
R217	1-215-437-00	s	METAL 4.7K 1% 1/6W
R218	1-215-437-00	s	METAL 4.7K 1% 1/6W
R219	1-215-437-00	s	METAL 4.7K 1% 1/6W
R220	1-215-437-00	s	METAL 4.7K 1% 1/6W
R221	1-215-469-00	s	METAL 100K 1% 1/6W
R301	1-215-424-00	s	METAL 1.3K 1% 1/6W
R302	1-215-423-00	s	METAL 1.2K 1% 1/6W
R303	1-215-438-00	s	METAL 5.1K 1% 1/6W
R304	1-215-438-00	s	METAL 5.1K 1% 1/6W
R305	1-215-407-00	s	METAL 270 1% 1/6W
R306	1-215-412-00	s	METAL 430 1% 1/6W
R307	1-215-416-00	s	METAL 620 1% 1/6W
R308	1-215-442-00	s	METAL 7.5K 1% 1/6W
R309	1-215-433-00	s	METAL 3.3K 1% 1/6W
R310	1-215-469-00	s	METAL 100K 1% 1/6W
R311	1-215-469-00	s	METAL 100K 1% 1/6W
R312	1-215-375-00	s	METAL 12 1% 1/6W
R313	1-215-387-00	s	METAL 39 1% 1/6W
R314	1-215-432-00	s	METAL 3K 1% 1/6W
R315	1-215-433-00	s	METAL 3.3K 1% 1/6W
R316	1-215-433-00	s	METAL 3.3K 1% 1/6W
R317	1-215-437-00	s	METAL 4.7K 1% 1/6W
R318	1-215-437-00	s	METAL 4.7K 1% 1/6W
R319	1-215-437-00	s	METAL 4.7K 1% 1/6W
R320	1-215-437-00	s	METAL 4.7K 1% 1/6W
R321	1-215-469-00	s	METAL 100K 1% 1/6W
R401	1-215-424-00	s	METAL 1.3K 1% 1/6W
R402	1-215-423-00	s	METAL 1.2K 1% 1/6W
R403	1-215-438-00	s	METAL 5.1K 1% 1/6W
R404	1-215-438-00	s	METAL 5.1K 1% 1/6W
R405	1-215-407-00	s	METAL 270 1% 1/6W
R406	1-215-412-00	s	METAL 430 1% 1/6W
R407	1-215-416-00	s	METAL 620 1% 1/6W
R408	1-215-442-00	s	METAL 7.5K 1% 1/6W
R409	1-215-433-00	s	METAL 3.3K 1% 1/6W
R410	1-215-469-00	s	METAL 100K 1% 1/6W
R411	1-215-469-00	s	METAL 100K 1% 1/6W
R412	1-215-375-00	s	METAL 12 1% 1/6W
R413	1-215-387-00	s	METAL 39 1% 1/6W
R414	1-215-432-00	s	METAL 3K 1% 1/6W
R415	1-215-433-00	s	METAL 3.3K 1% 1/6W
R416	1-215-433-00	s	METAL 3.3K 1% 1/6W
R417	1-215-437-00	s	METAL 4.7K 1% 1/6W
R418	1-215-437-00	s	METAL 4.7K 1% 1/6W
R419	1-215-437-00	s	METAL 4.7K 1% 1/6W
R420	1-215-437-00	s	METAL 4.7K 1% 1/6W

(CP-101P BOARD)

Ref. No. or Q'ty	Part No.	SP	Description
R421	1-215-469-00	s	METAL 100K 1% 1/6W
R422	1-247-745-11	s	CARBON 330 5% 1/2W
R423	1-247-745-11	s	CARBON 330 5% 1/2W
S1	1-570-157-21	s	SWITCH, SLIDE
S2	1-570-157-21	s	SWITCH, SLIDE
S3	1-554-958-11	s	SWITCH, SLIDE
S4	1-554-377-00	s	SWITCH, SLIDE
S101	1-554-958-11	s	SWITCH, SLIDE
S102	1-571-062-11	s	SWITCH, SLIDE
S201	1-554-958-11	s	SWITCH, SLIDE
S202	1-571-062-11	s	SWITCH, SLIDE
S301	1-554-958-11	s	SWITCH, SLIDE
S302	1-571-062-11	s	SWITCH, SLIDE
S401	1-554-958-11	s	SWITCH, SLIDE
S402	1-571-062-11	s	SWITCH, SLIDE

NOTE: Please see pages 19-51 and 19-52 for the parts that are not listed in the part list.

CP-103P BOARD

Ref. No. or Q'ty	Part No.	SP	Description
1pc	A-6717-470-A	o	MOUNTED CIRCUIT BOARD, CP-103P
C1	1-124-234-00	s	ELECT 22uF 20% 16V
C2	1-161-055-00	s	CERAMIC 0.022uF 10% 50V
C3	1-124-234-00	s	ELECT 22uF 20% 16V
C4	1-161-055-00	s	CERAMIC 0.022uF 10% 50V
CN501	1-559-264-11	o	CABLE, FLAT 30P
IC1	8-759-009-07	s	IC MC14053BF
L1	1-410-470-31	s	INDUCTOR 10uH
L2	1-410-470-31	s	INDUCTOR 10uH
Q1	8-729-901-05	s	TRANSISTOR DTA124EK
R6	1-215-458-00	s	METAL 36K 1% 1/6W
R7	1-215-428-00	s	METAL 2K 1% 1/6W
RV1	1-237-696-11	s	RES, VAR, CARBON 5K
RV2	1-237-696-11	s	RES, VAR, CARBON 5K
RV3	1-237-696-11	s	RES, VAR, CARBON 5K
RV4	1-237-695-11	s	RES, VAR, CARBON 5K
RV6	1-237-696-11	s	RES, VAR, CARBON 5K
RV7	1-237-695-11	s	RES, VAR, CARBON 5K
RV8	1-237-696-11	s	RES, VAR, CARBON 5K
S1	1-570-157-51	s	SWITCH, SLIDE
S2	1-570-157-51	s	SWITCH, SLIDE
S3	1-570-157-51	s	SWITCH, SLIDE
S4	1-570-157-51	s	SWITCH, SLIDE
S6	1-571-061-11	s	SWITCH, SLIDE
S7	1-570-157-51	s	SWITCH, SLIDE
S8	1-570-157-51	s	SWITCH, SLIDE
S9	1-570-157-51	s	SWITCH, SLIDE
S10	1-570-157-51	s	SWITCH, SLIDE
S11	1-570-157-51	s	SWITCH, SLIDE
S12	1-570-157-51	s	SWITCH, SLIDE
S15	1-554-949-11	s	SWITCH, SLIDE

CP-153 BOARD

Ref. No. or Q'ty	Part No.	SP	Description
1pc	A-6725-874-A	o	MOUNTED CIRCUIT BOARD, CP-153
C5	1-124-446-11	s	ELECT 47uF 20% 10V
C6	1-124-446-11	s	ELECT 47uF 20% 10V
CN1	1-506-477-11	s	CONNECTOR, 12P, MALE
CN2	1-506-475-11	o	CONNECTOR, 10P, MALE
CN3	1-506-469-11	s	CONNECTOR, 4P, MALE
CN4	1-506-471-11	s	CONNECTOR, 6P, MALE
CN5	1-506-469-11	s	CONNECTOR, 4P, MALE
CN6	1-563-142-11	s	CONNECTOR,D-SUB 25P FEMALE
IC1	8-759-904-76	s	IC AM26LS31CN
IC2	8-759-942-37	s	IC SN75179BP
IC3	8-759-916-20	s	IC SN74HC14N
R1	1-216-667-11	s	METAL, CHIP 4.7K 0.5% 1/10W
R2	1-216-667-11	s	METAL, CHIP 4.7K 0.5% 1/10W
R3	1-216-667-11	s	METAL, CHIP 4.7K 0.5% 1/10W
R4	1-216-667-11	s	METAL, CHIP 4.7K 0.5% 1/10W
R5	1-216-667-11	s	METAL, CHIP 4.7K 0.5% 1/10W
R6	1-216-699-11	s	METAL, CHIP 100K 0.5% 1/10W
R7	1-216-699-11	s	METAL, CHIP 100K 0.5% 1/10W
R8	1-216-679-11	s	METAL, CHIP 15K 0.5% 1/10W
R9	1-216-679-11	s	METAL, CHIP 15K 0.5% 1/10W
R10	1-216-635-11	s	METAL, CHIP 220 0.5% 1/10W
R11	1-216-635-11	s	METAL, CHIP 220 0.5% 1/10W

C810	1-126-103-11	s	ELECT 470uF 20% 16V
C813	1-126-103-11	s	ELECT 470uF 20% 16V
D601	8-719-800-76	s	DIODE 1SS226
D602	8-719-800-76	s	DIODE 1SS226

NOTE: Please see pages 19-51 and 19-52 for the parts that are not listed in the part list.

CP-154 BOARD

Ref. No. or Q'ty	Part No.	SP	Description
1pc	A-6713-393-A	o	MOUNTED CIRCUIT BOARD, CP-154
#C15	1-124-119-00	s	ELECT 330uF 20% 16V
#C16	1-124-119-00	s	ELECT 330uF 20% 16V
C101	1-124-910-11	s	ELECT 47uF 20% 50V
C102	1-124-910-11	s	ELECT 47uF 20% 50V
C106	1-124-910-11	s	ELECT 47uF 20% 50V
C201	1-124-910-11	s	ELECT 47uF 20% 50V
C202	1-124-910-11	s	ELECT 47uF 20% 50V
C206	1-124-910-11	s	ELECT 47uF 20% 50V
CN5	1-568-006-11	s	CONNECTOR, XLR 3P, FEMALE
CN6	1-568-006-11	s	CONNECTOR, XLR 3P, FEMALE
CN471	1-506-470-11	s	CONNECTOR, 5P, MALE
CN472	1-506-470-11	s	CONNECTOR, 5P, MALE
CN473	1-506-467-11	s	CONNECTOR, 2P, MALE
CN474	1-506-467-11	s	CONNECTOR, 2P, MALE
D101	8-719-800-76	s	DIODE 1SS226
D102	8-719-800-76	s	DIODE 1SS226
D201	8-719-800-76	s	DIODE 1SS226
D202	8-719-800-76	s	DIODE 1SS226
IC101	8-759-900-72	s	IC NE5532P
IC102	8-759-900-72	s	IC NE5532P
IC201	8-759-900-72	s	IC NE5532P
Q11	8-729-807-16	s	TRANSISTOR 2SD1621
Q12	8-729-805-25	s	TRANSISTOR 2SB1121
R103	1-216-667-11	s	METAL, CHIP 4.7K 0.5% 1/10W
R104	1-216-667-11	s	METAL, CHIP 4.7K 0.5% 1/10W
R105	1-216-660-11	s	METAL, CHIP 2.4K 0.5% 1/10W
R106	1-216-699-11	s	METAL, CHIP 100K 0.5% 1/10W
R107	1-216-699-11	s	METAL, CHIP 100K 0.5% 1/10W
R108	1-216-663-11	s	METAL, CHIP 3.3K 0.5% 1/10W
R109	1-216-663-11	s	METAL, CHIP 3.3K 0.5% 1/10W
R110	1-216-667-11	s	METAL, CHIP 4.7K 0.5% 1/10W
R111	1-216-667-11	s	METAL, CHIP 4.7K 0.5% 1/10W
R112	1-216-667-11	s	METAL, CHIP 4.7K 0.5% 1/10W
R113	1-216-667-11	s	METAL, CHIP 4.7K 0.5% 1/10W
R203	1-216-667-11	s	METAL, CHIP 4.7K 0.5% 1/10W
R204	1-216-667-11	s	METAL, CHIP 4.7K 0.5% 1/10W
R205	1-216-660-11	s	METAL, CHIP 2.4K 0.5% 1/10W
R206	1-216-699-11	s	METAL, CHIP 100K 0.5% 1/10W
R207	1-216-699-11	s	METAL, CHIP 100K 0.5% 1/10W
R208	1-216-663-11	s	METAL, CHIP 3.3K 0.5% 1/10W
R209	1-216-663-11	s	METAL, CHIP 3.3K 0.5% 1/10W
R210	1-216-667-11	s	METAL, CHIP 4.7K 0.5% 1/10W
R211	1-216-667-11	s	METAL, CHIP 4.7K 0.5% 1/10W
R212	1-216-667-11	s	METAL, CHIP 4.7K 0.5% 1/10W
R213	1-216-667-11	s	METAL, CHIP 4.7K 0.5% 1/10W

CP-161 BOARD

Ref. No. or Q'ty	Part No.	SP	Description
1pc	A-6713-392-A	o	MOUNTED CIRCUIT BOARD, CP-161
C1	1-126-103-11	s	ELECT 470uF 20% 16V
C101	1-126-396-11	s	ELECT, CHIP 47uF 20% 16V
C106	1-126-394-11	s	ELECT, CHIP 10uF 20% 16V
C107	1-126-394-11	s	ELECT, CHIP 10uF 20% 16V
C108	1-126-394-11	s	ELECT, CHIP 10uF 20% 16V
C109	1-126-394-11	s	ELECT, CHIP 10uF 20% 16V
C110	1-126-103-11	s	ELECT 470uF 20% 16V
C111	1-126-103-11	s	ELECT 470uF 20% 16V
C201	1-126-396-11	s	ELECT, CHIP 47uF 20% 16V
C206	1-126-394-11	s	ELECT, CHIP 10uF 20% 16V
C207	1-126-394-11	s	ELECT, CHIP 10uF 20% 16V
C208	1-126-394-11	s	ELECT, CHIP 10uF 20% 16V
C209	1-126-394-11	s	ELECT, CHIP 10uF 20% 16V
C210	1-126-103-11	s	ELECT 470uF 20% 16V
C211	1-126-103-11	s	ELECT 470uF 20% 16V
C301	1-126-396-11	s	ELECT, CHIP 47uF 20% 16V
C306	1-126-394-11	s	ELECT, CHIP 10uF 20% 16V
C307	1-126-394-11	s	ELECT, CHIP 10uF 20% 16V
C308	1-126-394-11	s	ELECT, CHIP 10uF 20% 16V
C309	1-126-394-11	s	ELECT, CHIP 10uF 20% 16V
C310	1-126-103-11	s	ELECT 470uF 20% 16V
C311	1-126-103-11	s	ELECT 470uF 20% 16V
C401	1-126-396-11	s	ELECT, CHIP 47uF 20% 16V
C406	1-126-394-11	s	ELECT, CHIP 10uF 20% 16V
C407	1-126-394-11	s	ELECT, CHIP 10uF 20% 16V
C408	1-126-394-11	s	ELECT, CHIP 10uF 20% 16V
C409	1-126-394-11	s	ELECT, CHIP 10uF 20% 16V
C410	1-126-103-11	s	ELECT 470uF 20% 16V
C411	1-126-103-11	s	ELECT 470uF 20% 16V
C501	1-126-396-11	s	ELECT, CHIP 47uF 20% 16V
C506	1-126-394-11	s	ELECT, CHIP 10uF 20% 16V
C507	1-126-394-11	s	ELECT, CHIP 10uF 20% 16V
C508	1-126-394-11	s	ELECT, CHIP 10uF 20% 16V
C509	1-126-394-11	s	ELECT, CHIP 10uF 20% 16V
C510	1-126-103-11	s	ELECT 470uF 20% 16V
C511	1-126-103-11	s	ELECT 470uF 20% 16V
C601	1-126-396-11	s	ELECT, CHIP 47uF 20% 16V
C606	1-126-394-11	s	ELECT, CHIP 10uF 20% 16V
C607	1-126-394-11	s	ELECT, CHIP 10uF 20% 16V
C608	1-126-394-11	s	ELECT, CHIP 10uF 20% 16V
C609	1-126-394-11	s	ELECT, CHIP 10uF 20% 16V
C610	1-126-103-11	s	ELECT 470uF 20% 16V
C611	1-126-103-11	s	ELECT 470uF 20% 16V
C701	1-126-396-11	s	ELECT, CHIP 47uF 20% 16V
C702	1-126-396-11	s	ELECT, CHIP 47uF 20% 16V
C706	1-124-234-00	s	ELECT 22uF 20% 16V
C708	1-124-234-00	s	ELECT 22uF 20% 16V
C711	1-126-103-11	s	ELECT 470uF 20% 16V
C712	1-126-103-11	s	ELECT 470uF 20% 16V
C716	1-126-096-11	s	ELECT 10uF 20% 35V
C801	1-126-103-11	s	ELECT 470uF 20% 16V
C802	1-126-103-11	s	ELECT 470uF 20% 16V
C804	1-126-103-11	s	ELECT 470uF 20% 16V
C806	1-126-103-11	s	ELECT 470uF 20% 16V
C809	1-126-103-11	s	ELECT 470uF 20% 16V

NOTE: Please see pages 19-51 and 19-52 for the parts that are not listed in the part list.

(CP-161 BOARD)

Ref. No. or Q'ty	Part No.	SP	Description
C810	1-126-103-11	s	ELECT 470uF 20% 16V
C813	1-126-103-11	s	ELECT 470uF 20% 16V
C814	1-126-103-11	s	ELECT 470uF 20% 16V
C817	1-126-103-11	s	ELECT 470uF 20% 16V
C818	1-126-103-11	s	ELECT 470uF 20% 16V
C821	1-126-103-11	s	ELECT 470uF 20% 16V
C822	1-126-103-11	s	ELECT 470uF 20% 16V
CN407	1-506-470-11	s	CONNECTOR, 5P, MALE
CN408	1-506-473-11	s	CONNECTOR, 8P, MALE
CN409	1-506-469-11	s	CONNECTOR, 4P, MALE
CN410	1-506-471-11	s	CONNECTOR, 6P, MALE
CN411	1-506-469-11	s	CONNECTOR, 4P, MALE
CN412	1-506-471-11	s	CONNECTOR, 6P, MALE
CN413	1-506-468-11	s	CONNECTOR, 3P, MALE
CN414	1-506-469-11	s	CONNECTOR, 4P, MALE
CN415	1-506-470-11	s	CONNECTOR, 5P, MALE
CN416	1-506-475-11	s	CONNECTOR, 10P, MALE
D1	8-719-200-02	s	DIODE 10E2
D2	8-719-200-02	s	DIODE 10E2
D101	8-719-800-76	s	DIODE 1SS226
D102	8-719-800-76	s	DIODE 1SS226
D103	8-719-800-76	s	DIODE 1SS226
D104	8-719-800-76	s	DIODE 1SS226
D105	8-719-104-34	s	DIODE 1S2835
D106	8-719-104-34	s	DIODE 1S2835
D107	8-719-104-34	s	DIODE 1S2835
D108	8-719-104-34	s	DIODE 1S2835
D201	8-719-800-76	s	DIODE 1SS226
D202	8-719-800-76	s	DIODE 1SS226
D203	8-719-800-76	s	DIODE 1SS226
D204	8-719-800-76	s	DIODE 1SS226
D205	8-719-104-34	s	DIODE 1S2835
D206	8-719-104-34	s	DIODE 1S2835
D207	8-719-104-34	s	DIODE 1S2835
D208	8-719-104-34	s	DIODE 1S2835
D301	8-719-800-76	s	DIODE 1SS226
D302	8-719-800-76	s	DIODE 1SS226
D303	8-719-800-76	s	DIODE 1SS226
D304	8-719-800-76	s	DIODE 1SS226
D305	8-719-104-34	s	DIODE 1S2835
D306	8-719-104-34	s	DIODE 1S2835
D307	8-719-104-34	s	DIODE 1S2835
D308	8-719-104-34	s	DIODE 1S2835
D401	8-719-800-76	s	DIODE 1SS226
D402	8-719-800-76	s	DIODE 1SS226
D403	8-719-800-76	s	DIODE 1SS226
D404	8-719-800-76	s	DIODE 1SS226
D405	8-719-104-34	s	DIODE 1S2835
D406	8-719-104-34	s	DIODE 1S2835
D407	8-719-104-34	s	DIODE 1S2835
D408	8-719-104-34	s	DIODE 1S2835
D501	8-719-800-76	s	DIODE 1SS226
D502	8-719-800-76	s	DIODE 1SS226
D503	8-719-800-76	s	DIODE 1SS226
D504	8-719-800-76	s	DIODE 1SS226
D505	8-719-104-34	s	DIODE 1S2835

(CP-161 BOARD)

Ref. No. or Q'ty	Part No.	SP	Description
D506	8-719-104-34	s	DIODE 1S2835
D507	8-719-104-34	s	DIODE 1S2835
D508	8-719-104-34	s	DIODE 1S2835
D601	8-719-800-76	s	DIODE 1SS226
D602	8-719-800-76	s	DIODE 1SS226
D603	8-719-800-76	s	DIODE 1SS226
D604	8-719-800-76	s	DIODE 1SS226
D605	8-719-104-34	s	DIODE 1S2835
D606	8-719-104-34	s	DIODE 1S2835
D607	8-719-104-34	s	DIODE 1S2835
D608	8-719-104-34	s	DIODE 1S2835
D701	8-719-400-18	s	DIODE MA152WK
D702	8-719-400-18	s	DIODE MA152WK
D703	8-719-800-76	s	DIODE 1SS226
D704	8-719-800-76	s	DIODE 1SS226
D705	8-719-800-76	s	DIODE 1SS226
D706	8-719-800-76	s	DIODE 1SS226
D707	8-719-800-76	s	DIODE 1SS226
D708	8-719-800-76	s	DIODE 1SS226
D709	8-719-400-18	s	DIODE MA152WK
D710	8-719-400-18	s	DIODE MA152WK
D711	8-719-400-18	s	DIODE MA152WK
D712	8-719-400-18	s	DIODE MA152WK
IC101	8-759-109-70	s	IC UPC4560G2
IC102	8-759-109-70	s	IC UPC4560G2
IC201	8-759-109-70	s	IC UPC4560G2
IC202	8-759-109-70	s	IC UPC4560G2
IC301	8-759-109-70	s	IC UPC4560G2
IC302	8-759-109-70	s	IC UPC4560G2
IC401	8-759-109-70	s	IC UPC4560G2
IC402	8-759-109-70	s	IC UPC4560G2
IC501	8-759-109-70	s	IC UPC4560G2
IC502	8-759-109-70	s	IC UPC4560G2
IC602	8-759-109-70	s	IC UPC4560G2
IC701	8-759-109-70	s	IC UPC4560G2
IC702	8-759-109-70	s	IC UPC4560G2
IC703	8-759-109-70	s	IC UPC4560G2
IC704	8-759-109-70	s	IC UPC4560G2
IC705	8-759-109-70	s	IC UPC4560G2
IC706	8-759-109-70	s	IC UPC4560G2
IC707	8-759-109-70	s	IC UPC4560G2
IC708	8-759-109-70	s	IC UPC4560G2
IC709	8-759-109-70	s	IC UPC4560G2
IC710	8-759-109-70	s	IC UPC4560G2
IC711	8-759-109-70	s	IC UPC4560G2
IC712	8-759-008-85	s	IC MC14016BF
IC713	8-759-008-85	s	IC MC14016BF
IC715	8-759-008-85	s	IC MC14016BF
IC716	8-759-008-85	s	IC MC14016BF
IC717	8-759-982-23	s	IC TA78L008AP
IC718	8-759-982-46	s	IC RC79L08A
Q1	8-729-216-22	s	TRANSISTOR 2SA1162
Q51	8-766-001-49	s	TRANSISTOR TX429M
Q52	8-729-901-01	s	TRANSISTOR DTC144EK
Q53	8-729-901-06	s	TRANSISTOR DTA144EK
Q101	8-729-202-38	s	TRANSISTOR 2SC3326N

NOTE: Please see pages 19-51 and 19-52 for the parts that are not listed in the part list.

(CP-161 BOARD)

Ref. No. or Q'ty	Part No.	SP	Description
Q102	8-729-202-38	s	TRANSISTOR 2SC3326N
Q103	8-729-202-38	s	TRANSISTOR 2SC3326N
Q104	8-729-202-38	s	TRANSISTOR 2SC3326N
Q105	8-729-180-93	s	TRANSISTOR 2SD809
Q106	8-729-173-13	s	TRANSISTOR 2SB731
Q107	8-729-180-93	s	TRANSISTOR 2SD809
Q108	8-729-173-13	s	TRANSISTOR 2SB731
Q109	8-729-271-22	s	TRANSISTOR 2SC2712-G
Q110	8-729-216-22	s	TRANSISTOR 2SA1162
Q111	8-729-271-22	s	TRANSISTOR 2SC2712-G
Q112	8-729-216-22	s	TRANSISTOR 2SA1162
Q201	8-729-202-38	s	TRANSISTOR 2SC3326N
Q202	8-729-202-38	s	TRANSISTOR 2SC3326N
Q203	8-729-202-38	s	TRANSISTOR 2SC3326N
Q204	8-729-202-38	s	TRANSISTOR 2SC3326N
Q205	8-729-180-93	s	TRANSISTOR 2SD809
Q206	8-729-173-13	s	TRANSISTOR 2SB731
Q207	8-729-180-93	s	TRANSISTOR 2SD809
Q208	8-729-173-13	s	TRANSISTOR 2SB731
Q209	8-729-271-22	s	TRANSISTOR 2SC2712-G
Q210	8-729-216-22	s	TRANSISTOR 2SA1162
Q211	8-729-271-22	s	TRANSISTOR 2SC2712-G
Q212	8-729-216-22	s	TRANSISTOR 2SA1162
Q301	8-729-202-38	s	TRANSISTOR 2SC3326N
Q302	8-729-202-38	s	TRANSISTOR 2SC3326N
Q303	8-729-202-38	s	TRANSISTOR 2SC3326N
Q304	8-729-202-38	s	TRANSISTOR 2SC3326N
Q305	8-729-180-93	s	TRANSISTOR 2SD809
Q306	8-729-173-13	s	TRANSISTOR 2SB731
Q307	8-729-180-93	s	TRANSISTOR 2SD809
Q308	8-729-173-13	s	TRANSISTOR 2SB731
Q309	8-729-271-22	s	TRANSISTOR 2SC2712-G
Q310	8-729-216-22	s	TRANSISTOR 2SA1162
Q311	8-729-271-22	s	TRANSISTOR 2SC2712-G
Q312	8-729-216-22	s	TRANSISTOR 2SA1162
Q401	8-729-202-38	s	TRANSISTOR 2SC3326N
Q402	8-729-202-38	s	TRANSISTOR 2SC3326N
Q403	8-729-202-38	s	TRANSISTOR 2SC3326N
Q404	8-729-202-38	s	TRANSISTOR 2SC3326N
Q405	8-729-180-93	s	TRANSISTOR 2SD809
Q406	8-729-173-13	s	TRANSISTOR 2SB731
Q407	8-729-180-93	s	TRANSISTOR 2SD809
Q408	8-729-173-13	s	TRANSISTOR 2SB731
Q409	8-729-271-22	s	TRANSISTOR 2SC2712-G
Q410	8-729-216-22	s	TRANSISTOR 2SA1162
Q411	8-729-271-22	s	TRANSISTOR 2SC2712-G
Q412	8-729-216-22	s	TRANSISTOR 2SA1162
Q501	8-729-202-38	s	TRANSISTOR 2SC3326N
Q502	8-729-202-38	s	TRANSISTOR 2SC3326N
Q503	8-729-202-38	s	TRANSISTOR 2SC3326N
Q504	8-729-202-38	s	TRANSISTOR 2SC3326N
Q505	8-729-180-93	s	TRANSISTOR 2SD809
Q506	8-729-173-13	s	TRANSISTOR 2SB731
Q507	8-729-180-93	s	TRANSISTOR 2SD809
Q508	8-729-173-13	s	TRANSISTOR 2SB731
Q509	8-729-271-22	s	TRANSISTOR 2SC2712-G

(CP-161 BOARD)

Ref. No. or Q'ty	Part No.	SP	Description
Q510	8-729-216-22	s	TRANSISTOR 2SA1162
Q511	8-729-271-22	s	TRANSISTOR 2SC2712-G
Q512	8-729-216-22	s	TRANSISTOR 2SA1162
Q601	8-729-202-38	s	TRANSISTOR 2SC3326N
Q602	8-729-202-38	s	TRANSISTOR 2SC3326N
Q603	8-729-202-38	s	TRANSISTOR 2SC3326N
Q604	8-729-202-38	s	TRANSISTOR 2SC3326N
Q605	8-729-180-93	s	TRANSISTOR 2SD809
Q606	8-729-173-13	s	TRANSISTOR 2SB731
Q607	8-729-180-93	s	TRANSISTOR 2SD809
Q608	8-729-173-13	s	TRANSISTOR 2SB731
Q609	8-729-271-22	s	TRANSISTOR 2SC2712-G
Q610	8-729-216-22	s	TRANSISTOR 2SA1162
Q611	8-729-271-22	s	TRANSISTOR 2SC2712-G
Q612	8-729-216-22	s	TRANSISTOR 2SA1162
Q701	8-729-901-01	s	TRANSISTOR DTC144EK
Q702	8-729-901-06	s	TRANSISTOR DTA144EK
Q703	8-729-901-01	s	TRANSISTOR DTC144EK
Q704	8-729-901-06	s	TRANSISTOR DTA144EK
Q705	8-729-901-01	s	TRANSISTOR DTC144EK
Q706	8-729-901-06	s	TRANSISTOR DTA144EK
Q707	8-729-901-01	s	TRANSISTOR DTC144EK
Q708	8-729-901-06	s	TRANSISTOR DTA144EK
Q709	8-729-901-06	s	TRANSISTOR DTA144EK
Q710	8-729-901-01	s	TRANSISTOR DTC144EK
Q711	8-729-901-06	s	TRANSISTOR DTA144EK
Q712	8-729-901-01	s	TRANSISTOR DTC144EK
Q713	8-729-208-87	s	TRANSISTOR 2SJ106-Y
Q714	8-729-205-38	s	TRANSISTOR 2SK208-Y
Q715	8-729-205-38	s	TRANSISTOR 2SK208-Y
Q716	8-729-208-87	s	TRANSISTOR 2SJ106-Y
Q717	8-729-901-06	s	TRANSISTOR DTA144EK
Q718	8-729-901-01	s	TRANSISTOR DTC144EK
Q719	8-729-202-38	s	TRANSISTOR 2SC3326N
Q720	8-729-901-01	s	TRANSISTOR DTC144EK
Q721	8-729-901-01	s	TRANSISTOR DTC144EK
Q722	8-729-901-01	s	TRANSISTOR DTC144EK
Q723	8-729-216-22	s	TRANSISTOR 2SA1162
Q724	8-729-216-22	s	TRANSISTOR 2SA1162
Q725	8-729-202-38	s	TRANSISTOR 2SC3326N
Q726	8-729-202-38	s	TRANSISTOR 2SC3326N
Q801	8-729-905-53	s	TRANSISTOR 2SD1055-R
Q802	8-729-205-95	s	TRANSISTOR 2SB822-R
Q803	8-729-905-53	s	TRANSISTOR 2SD1055-R
Q804	8-729-205-95	s	TRANSISTOR 2SB822-R
Q805	8-729-905-53	s	TRANSISTOR 2SD1055-R
Q806	8-729-205-95	s	TRANSISTOR 2SB822-R
R101	1-216-660-11	s	METAL, CHIP 2.4K 0.5% 1/10W
R102	1-216-628-11	s	METAL, CHIP 110 0.5% 1/10W
R103	1-216-654-11	s	METAL, CHIP 1.3K 0.5% 1/10W
R104	1-216-662-11	s	METAL, CHIP 3K 0.5% 1/10W
R105	1-216-659-11	s	METAL, CHIP 2.2K 0.5% 1/10W
R106	1-216-679-11	s	METAL, CHIP 15K 0.5% 1/10W
R107	1-216-661-11	s	METAL, CHIP 2.7K 0.5% 1/10W
R109	1-216-667-11	s	METAL, CHIP 4.7K 0.5% 1/10W
R110	1-216-667-11	s	METAL, CHIP 4.7K 0.5% 1/10W

NOTE: Please see pages 19-51 and 19-52 for the parts that are not listed in the part list. .

(CP-161 BOARD)

Ref. No. or Q'ty	Part No.	SP	Description
R111	1-216-667-11	s	METAL, CHIP 4.7K 0.5% 1/10W
R112	1-216-667-11	s	METAL, CHIP 4.7K 0.5% 1/10W
R114	1-216-679-11	s	METAL, CHIP 15K 0.5% 1/10W
R116	1-216-679-11	s	METAL, CHIP 15K 0.5% 1/10W
R131	1-249-389-11	s	CARBON 4.7 5% 1/4W
R132	1-216-679-11	s	METAL, CHIP 15K 0.5% 1/10W
R133	1-249-389-11	s	CARBON 4.7 5% 1/4W
R135	1-216-631-11	s	METAL, CHIP 150 0.5% 1/10W
R136	1-216-679-11	s	METAL, CHIP 15K 0.5% 1/10W
R138	1-216-631-11	s	METAL, CHIP 150 0.5% 1/10W
R201	1-216-660-11	s	METAL, CHIP 2.4K 0.5% 1/10W
R202	1-216-628-11	s	METAL, CHIP 110 0.5% 1/10W
R203	1-216-654-11	s	METAL, CHIP 1.3K 0.5% 1/10W
R204	1-216-662-11	s	METAL, CHIP 3K 0.5% 1/10W
R205	1-216-659-11	s	METAL, CHIP 2.2K 0.5% 1/10W
R206	1-216-679-11	s	METAL, CHIP 15K 0.5% 1/10W
R207	1-216-661-11	s	METAL, CHIP 2.7K 0.5% 1/10W
R209	1-216-667-11	s	METAL, CHIP 4.7K 0.5% 1/10W
R210	1-216-667-11	s	METAL, CHIP 4.7K 0.5% 1/10W
R211	1-216-667-11	s	METAL, CHIP 4.7K 0.5% 1/10W
R212	1-216-667-11	s	METAL, CHIP 4.7K 0.5% 1/10W
R214	1-216-679-11	s	METAL, CHIP 15K 0.5% 1/10W
R216	1-216-679-11	s	METAL, CHIP 15K 0.5% 1/10W
R231	1-249-389-11	s	CARBON 4.7 5% 1/4W
R232	1-216-679-11	s	METAL, CHIP 15K 0.5% 1/10W
R233	1-249-389-11	s	CARBON 4.7 5% 1/4W
R235	1-216-631-11	s	METAL, CHIP 150 0.5% 1/10W
R236	1-216-679-11	s	METAL, CHIP 15K 0.5% 1/10W
R238	1-216-631-11	s	METAL, CHIP 150 0.5% 1/10W
R301	1-216-660-11	s	METAL, CHIP 2.4K 0.5% 1/10W
R302	1-216-628-11	s	METAL, CHIP 110 0.5% 1/10W
R303	1-216-654-11	s	METAL, CHIP 1.3K 0.5% 1/10W
R304	1-216-662-11	s	METAL, CHIP 3K 0.5% 1/10W
R305	1-216-659-11	s	METAL, CHIP 2.2K 0.5% 1/10W
R306	1-216-679-11	s	METAL, CHIP 15K 0.5% 1/10W
R307	1-216-661-11	s	METAL, CHIP 2.7K 0.5% 1/10W
R309	1-216-667-11	s	METAL, CHIP 4.7K 0.5% 1/10W
R310	1-216-667-11	s	METAL, CHIP 4.7K 0.5% 1/10W
R311	1-216-667-11	s	METAL, CHIP 4.7K 0.5% 1/10W
R312	1-216-667-11	s	METAL, CHIP 4.7K 0.5% 1/10W
R314	1-216-679-11	s	METAL, CHIP 15K 0.5% 1/10W
R316	1-216-679-11	s	METAL, CHIP 15K 0.5% 1/10W
R331	1-249-389-11	s	CARBON 4.7 5% 1/4W
R332	1-216-679-11	s	METAL, CHIP 15K 0.5% 1/10W
R333	1-249-389-11	s	CARBON 4.7 5% 1/4W
R335	1-216-631-11	s	METAL, CHIP 150 0.5% 1/10W
R336	1-216-679-11	s	METAL, CHIP 15K 0.5% 1/10W
R338	1-216-631-11	s	METAL, CHIP 150 0.5% 1/10W
R401	1-216-660-11	s	METAL, CHIP 2.4K 0.5% 1/10W
R402	1-216-628-11	s	METAL, CHIP 110 0.5% 1/10W
R403	1-216-654-11	s	METAL, CHIP 1.3K 0.5% 1/10W
R404	1-216-662-11	s	METAL, CHIP 3K 0.5% 1/10W
R405	1-216-659-11	s	METAL, CHIP 2.2K 0.5% 1/10W
R406	1-216-679-11	s	METAL, CHIP 15K 0.5% 1/10W
R407	1-216-661-11	s	METAL, CHIP 2.7K 0.5% 1/10W
R409	1-216-667-11	s	METAL, CHIP 4.7K 0.5% 1/10W

(CP-161 BOARD)

Ref. No. or Q'ty	Part No.	SP	Description
R410	1-216-667-11	s	METAL, CHIP 4.7K 0.5% 1/10W
R411	1-216-667-11	s	METAL, CHIP 4.7K 0.5% 1/10W
R412	1-216-667-11	s	METAL, CHIP 4.7K 0.5% 1/10W
R414	1-216-679-11	s	METAL, CHIP 15K 0.5% 1/10W
R416	1-216-679-11	s	METAL, CHIP 15K 0.5% 1/10W
R431	1-249-389-11	s	CARBON 4.7 5% 1/4W
R432	1-216-679-11	s	METAL, CHIP 15K 0.5% 1/10W
R433	1-249-389-11	s	CARBON 4.7 5% 1/4W
R435	1-216-631-11	s	METAL, CHIP 150 0.5% 1/10W
R436	1-216-679-11	s	METAL, CHIP 15K 0.5% 1/10W
R438	1-216-631-11	s	METAL, CHIP 150 0.5% 1/10W
R501	1-216-660-11	s	METAL, CHIP 2.4K 0.5% 1/10W
R502	1-216-628-11	s	METAL, CHIP 110 0.5% 1/10W
R503	1-216-654-11	s	METAL, CHIP 1.3K 0.5% 1/10W
R504	1-216-662-11	s	METAL, CHIP 3K 0.5% 1/10W
R505	1-216-659-11	s	METAL, CHIP 2.2K 0.5% 1/10W
R506	1-216-679-11	s	METAL, CHIP 15K 0.5% 1/10W
R507	1-216-661-11	s	METAL, CHIP 2.7K 0.5% 1/10W
R509	1-216-667-11	s	METAL, CHIP 4.7K 0.5% 1/10W
R510	1-216-667-11	s	METAL, CHIP 4.7K 0.5% 1/10W
R511	1-216-667-11	s	METAL, CHIP 4.7K 0.5% 1/10W
R512	1-216-667-11	s	METAL, CHIP 4.7K 0.5% 1/10W
R514	1-216-679-11	s	METAL, CHIP 15K 0.5% 1/10W
R516	1-216-679-11	s	METAL, CHIP 15K 0.5% 1/10W
R531	1-249-389-11	s	CARBON 4.7 5% 1/4W
R532	1-216-679-11	s	METAL, CHIP 15K 0.5% 1/10W
R533	1-249-389-11	s	CARBON 4.7 5% 1/4W
R535	1-216-631-11	s	METAL, CHIP 150 0.5% 1/10W
R536	1-216-679-11	s	METAL, CHIP 15K 0.5% 1/10W
R538	1-216-631-11	s	METAL, CHIP 150 0.5% 1/10W
R601	1-216-660-11	s	METAL, CHIP 2.4K 0.5% 1/10W
R602	1-216-628-11	s	METAL, CHIP 110 0.5% 1/10W
R603	1-216-654-11	s	METAL, CHIP 1.3K 0.5% 1/10W
R604	1-216-662-11	s	METAL, CHIP 3K 0.5% 1/10W
R605	1-216-659-11	s	METAL, CHIP 2.2K 0.5% 1/10W
R606	1-216-679-11	s	METAL, CHIP 15K 0.5% 1/10W
R607	1-216-661-11	s	METAL, CHIP 2.7K 0.5% 1/10W
R609	1-216-667-11	s	METAL, CHIP 4.7K 0.5% 1/10W
R610	1-216-667-11	s	METAL, CHIP 4.7K 0.5% 1/10W
R611	1-216-667-11	s	METAL, CHIP 4.7K 0.5% 1/10W
R612	1-216-667-11	s	METAL, CHIP 4.7K 0.5% 1/10W
R614	1-216-679-11	s	METAL, CHIP 15K 0.5% 1/10W
R616	1-216-679-11	s	METAL, CHIP 15K 0.5% 1/10W
R631	1-249-389-11	s	CARBON 4.7 5% 1/4W
R632	1-216-679-11	s	METAL, CHIP 15K 0.5% 1/10W
R633	1-249-389-11	s	CARBON 4.7 5% 1/4W
R635	1-216-631-11	s	METAL, CHIP 150 0.5% 1/10W
R636	1-216-679-11	s	METAL, CHIP 15K 0.5% 1/10W
R638	1-216-631-11	s	METAL, CHIP 150 0.5% 1/10W
#R739	1-216-121-00	s	METAL, CHIP 1M 5% 1/10W
#R740	1-216-121-00	s	METAL, CHIP 1M 5% 1/10W
#R744	1-216-121-00	s	METAL, CHIP 1M 5% 1/10W
#R745	1-216-121-00	s	METAL, CHIP 1M 5% 1/10W
R747	1-216-659-11	s	METAL, CHIP 2.2K 0.5% 1/10W
R750	1-216-659-11	s	METAL, CHIP 2.2K 0.5% 1/10W
R752	1-216-659-11	s	METAL, CHIP 2.2K 0.5% 1/10W

NOTE: Please see pages 19-51 and 19-52 for the parts that are not listed in the part list.

(CP-161 BOARD)

Ref. No. or Q'ty	Part No.	SP	Description
R801	1-249-411-11	s	CARBON 330 5% 1/4W
R802	1-249-411-11	s	CARBON 330 5% 1/4W
R803	1-249-411-11	s	CARBON 330 5% 1/4W
R804	1-249-411-11	s	CARBON 330 5% 1/4W
R805	1-249-411-11	s	CARBON 330 5% 1/4W
R806	1-249-411-11	s	CARBON 330 5% 1/4W
RV101	1-230-522-11	s	RES, ADJ, METAL 4.7K
RV201	1-230-522-11	s	RES, ADJ, METAL 4.7K
RV301	1-230-522-11	s	RES, ADJ, METAL 4.7K
RV401	1-230-522-11	s	RES, ADJ, METAL 4.7K
RV501	1-230-522-11	s	RES, ADJ, METAL 4.7K
RV601	1-230-522-11	s	RES, ADJ, METAL 4.7K

DE-15 BOARD

Ref. No. or Q'ty	Part No.	SP	Description
1pc	1-622-606-11	o	PRINTED CIRCUIT BOARD, DE-15
1pc	1-559-907-11	s	WIRE, FLEXIBLE CARD 13P
1pc	1-807-683-11	s	RESISTOR ELEMENT

DEC-42P BOARD

Ref. No. or Q'ty	Part No.	SP	Description
1pc	A-6711-982-A	o	MOUNTED CIRCUIT BOARD, DEC-42P

This board includes CF-36P board.
See "CF-36P BOARD" for details of it.

4pcs	7-622-207-05	s	N 2.6, TYPE 2
4pcs	7-628-254-30	s	SCREW +PS 2.6X10
C1	1-130-491-00	s	MYLAR 0.047uF 5% 50V
C2	1-130-483-00	s	MYLAR 0.01uF 5% 50V
C4	1-163-023-00	s	CERAMIC, CHIP 0.015uF 5% 50V
C9	1-162-198-31	s	CERAMIC 8.2PF 10% 50V
C10	1-107-049-00	s	MICA 8.2PF 500V
C11	1-131-368-00	s	TANTALUM 3.3uF 10% 16V
C14	1-130-491-00	s	MYLAR 0.047uF 5% 50V
C15	1-130-483-00	s	MYLAR 0.01uF 5% 50V
C17	1-163-023-00	s	CERAMIC, CHIP 0.015uF 5% 50V
C20	1-131-345-00	s	TANTALUM 0.47uF 10% 35V
C21	1-131-345-00	s	TANTALUM 0.47uF 10% 35V
C22	1-162-198-31	s	CERAMIC 8.2PF 10% 50V
C23	1-107-049-00	s	MICA 8.2PF 500V
C24	1-131-368-00	s	TANTALUM 3.3uF 10% 16V
C27	1-130-479-00	s	MYLAR 0.0047uF 5% 50V
C33	1-130-479-00	s	MYLAR 0.0047uF 5% 50V
C100	1-126-103-11	s	ELECT 470uF 20% 16V
C101	1-126-103-11	s	ELECT 470uF 20% 16V
C102	1-126-103-11	s	ELECT 470uF 20% 16V
C103	1-126-103-11	s	ELECT 470uF 20% 16V
C106	1-126-103-11	s	ELECT 470uF 20% 16V
C112	1-126-103-11	s	ELECT 470uF 20% 16V
C114	1-126-103-11	s	ELECT 470uF 20% 16V
C205	1-107-042-00	s	MICA 2.2PF 500V
C206	1-107-210-00	s	MICA 22PF 5% 500V
C214	1-107-210-00	s	MICA 22PF 5% 500V
C230	1-163-083-00	s	CERAMIC, CHIP 1PF 50V
C231	1-163-091-00	s	CERAMIC, CHIP 8PF 50V
C232	1-131-367-00	s	TANTALUM 22uF 10% 20V
C234	1-163-083-00	s	CERAMIC, CHIP 1PF 50V
C235	1-163-091-00	s	CERAMIC, CHIP 8PF 50V
C236	1-131-367-00	s	TANTALUM 22uF 10% 20V
C247	1-131-347-00	s	TANTALUM 1uF 10% 35V
C248	1-163-103-00	s	CERAMIC, CHIP 27PF 5% 50V
C300	1-126-103-11	s	ELECT 470uF 20% 16V
C302	1-124-472-11	s	ELECT 470uF 20% 10V
C406	1-131-363-00	s	TANTALUM 4.7uF 10% 20V
C408	1-131-341-00	s	TANTALUM 0.1uF 10% 35V
C413	1-107-042-00	s	MICA 2.2PF 500V
C418	1-107-211-00	s	MICA 24PF 5% 500V
C419	1-162-716-11	s	CERAMIC 180PF 1% 50V
C422	1-107-209-00	s	MICA 20PF 5% 500V
C428	1-107-043-00	s	MICA 2.7PF 500V
C435	1-131-343-00	s	TANTALUM 0.22uF 10% 35V
C436	1-131-343-00	s	TANTALUM 0.22uF 10% 35V
C502	1-126-176-11	s	ELECT 220uF 20% 10V
C504	1-126-176-11	s	ELECT 220uF 20% 10V
C506	1-124-472-11	s	ELECT 470uF 20% 10V
C515	1-124-472-11	s	ELECT 470uF 20% 10V
C524	1-126-176-11	s	ELECT 220uF 20% 10V

NOTE: Please see pages 19-51 and 19-52 for the parts that are not listed in the part list.

(DEC-42P BOARD)

Ref. No. or Q'ty	Part No.	SP	Description
C526	1-124-472-11	s	ELECT 470uF 20% 10V
C530	1-124-472-11	s	ELECT 470uF 20% 10V
C601	1-131-347-00	s	TANTALUM 1uF 10% 35V
C602	1-130-491-00	s	MYLAR 0.047uF 5% 50V
C603	1-162-888-11	s	CERAMIC 560PF 5% 50V
C622	1-135-145-11	s	TANTALUM, CHIP 0.47uF 10% 35V
C641	1-131-341-00	s	TANTALUM 0.1uF 10% 35V
C642	1-130-491-00	s	MYLAR 0.047uF 5% 50V
C643	1-162-888-11	s	CERAMIC 560PF 5% 50V
C666	1-135-145-11	s	TANTALUM, CHIP 0.47uF 10% 35V
C673	1-135-159-21	s	TANTALUM, CHIP 10uF 10% 20V
C691	1-163-127-00	s	CERAMIC, CHIP 270PF 5% 50V
C692	1-163-127-00	s	CERAMIC, CHIP 270PF 5% 50V
C693	1-135-070-00	s	TANTALUM, CHIP 0.1uF 10% 35V
C700	1-126-176-11	s	ELECT 220uF 20% 10V
C751	1-107-158-00	s	MICA 30PF 5% 500V
C752	1-107-158-00	s	MICA 30PF 5% 500V
C803	1-163-019-00	s	CERAMIC, CHIP 0.0068uF 10% 50V
C810	1-130-483-00	s	MYLAR 0.01uF 5% 50V
C901	1-130-476-00	s	MYLAR 0.0027uF 5% 50V
CN112	1-506-746-11	s	CONNECTOR, DIN 48P, MALE
CN113	1-506-748-11	s	CONNECTOR, DIN 96P, MALE
CN501	1-564-988-11	o	CONNECTOR, 14P, MALE
CN502	1-565-060-11	o	CONNECTOR, 16P, MALE
CV401	1-141-260-00	s	CAP, TRIMMER 50PF
CV402	1-141-227-00	o	CAP, TRIMMER 20PF
CV403	1-141-227-00	o	CAP, TRIMMER 20PF
D4	8-719-911-19	s	DIODE 1SS119
D101	8-719-110-22	s	DIODE RD11ES-B2
D201	8-759-908-15	s	IC TL431CLP
D202	8-759-908-15	s	IC TL431CLP
D203	8-719-105-58	s	DIODE RD3.9M-B2
D204	8-719-800-76	s	DIODE 1SS226
D400	8-719-104-10	s	DIODE 1SS99
#D401	8-719-981-01	s	DIODE ERA81-004
D505	8-719-400-18	s	DIODE MA152WK
D506	8-719-400-18	s	DIODE MA152WK
D509	8-719-400-18	s	DIODE MA152WK
D700	8-719-400-18	s	DIODE MA152WK
D701	8-719-104-10	s	DIODE 1SS99
D802	8-719-915-30	s	DIODE, VARICAP FC53M
D804	8-719-400-18	s	DIODE MA152WK
D805	8-719-105-46	s	DIODE RD3.3M-B2
D807	8-719-400-18	s	DIODE MA152WK
D808	8-719-400-18	s	DIODE MA152WK
D809	8-719-400-18	s	DIODE MA152WK
FB500	1-535-178-00	s	BEAD, FERRITE
FB701	1-535-178-00	s	BEAD, FERRITE
FL1	1-235-758-11	s	FILTER, LOW-PASS
FL2	1-235-758-11	s	FILTER, LOW-PASS
FL201	1-236-230-11	s	FILTER, LOW-PASS
FL202	1-236-230-11	s	FILTER, LOW-PASS
FL203	1-236-162-11	s	FILTER, LOW-PASS
FL401	1-236-070-11	s	FILTER, LOW-PASS

(DEC-42P BOARD)

Ref. No. or Q'ty	Part No.	SP	Description
IC1	8-759-981-51	s	IC RC1496M
IC2	8-759-009-06	s	IC MC14052BF
IC3	8-759-981-51	s	IC RC1496M
IC4	8-759-908-92	s	IC TL084CNS
IC5	8-759-908-92	s	IC TL084CNS
IC6	8-759-101-12	s	IC UPC311G2
IC7	8-759-009-07	s	IC MC14053BF
IC8	8-759-930-56	s	IC SN74LS163ANS
IC9	8-759-012-02	s	IC MC10H124M
IC10	8-759-012-03	s	IC MC10H131M
IC11	8-759-011-98	s	IC MC10H113M
IC101	8-759-982-25	s	IC RC78L09A
IC200	8-759-908-18	s	IC TL607CPS
IC201	8-752-006-12	s	IC CX20061
IC202	8-752-006-12	s	IC CX20061
IC203	8-759-908-18	s	IC TL607CPS
IC204	8-752-006-12	s	IC CX20061
IC205	8-752-006-12	s	IC CX20061
IC206	8-749-901-45	s	IC SBX4002-01
IC207	8-749-901-45	s	IC SBX4002-01
IC208	8-752-032-55	s	IC CXA1096M
IC209	8-752-032-55	s	IC CXA1096M
IC210	8-752-329-28	s	IC CXD1151Q
#IC211	8-759-508-58	s	IC MB40778H
IC212	8-759-908-17	s	IC TL082CPS
IC213	8-759-925-76	s	IC SN74HC08NS
IC214	8-759-908-18	s	IC TL607CPS
IC400	8-752-006-12	s	IC CX20061
IC401	8-752-006-12	s	IC CX20061
IC402	8-759-009-07	s	IC MC14053BF
IC403	1-808-743-11	s	IC BX6389
IC404	8-759-908-92	s	IC TL084CNS
IC405	8-759-009-06	s	IC MC14052BF
IC406	1-808-743-11	s	IC BX6389
IC407	8-759-982-44	s	IC RC79L05A
IC408	8-759-982-44	s	IC RC79L05A
IC409	8-759-982-25	s	IC RC78L09A
IC410	8-759-982-25	s	IC RC78L09A
IC411	8-752-015-81	s	IC CX20158
IC500	8-759-201-47	s	IC TA7357AP
IC502	8-759-920-14	s	IC S-8053ALR
IC509	8-757-993-01	s	IC CX7993A
IC510	8-759-941-27	s	IC MB4002PF
IC511	8-759-632-99	s	IC M5215TL
IC512	8-759-101-12	s	IC UPC311G2
IC513	8-759-201-47	s	IC TA7357AP
IC514	8-759-907-81	s	IC SN74LS221NS
IC515	8-759-941-27	s	IC MB4002PF
IC522	8-759-907-81	s	IC SN74LS221NS
IC523	8-759-907-81	s	IC SN74LS221NS
IC524	8-759-907-81	s	IC SN74LS221NS
IC525	8-759-902-88	s	IC SN74LS123NS
IC526	8-759-925-90	s	IC SN74HC74NS
IC533	8-759-907-81	s	IC SN74LS221NS
IC534	8-759-907-81	s	IC SN74LS221NS
IC541	8-759-925-85	s	IC SN74HC32NS

NOTE: Please see pages 19-51 and 19-52 for the parts that are not listed in the part list.

(DEC-42P BOARD)

Ref. No. or Q'ty	Part No.	SP	Description
IC542	8-759-009-11	s	IC MC14070BF
IC543	8-759-927-46	s	IC SN74HC00NS
IC544	8-759-927-46	s	IC SN74HC00NS
IC545	8-759-927-46	s	IC SN74HC00NS
IC546	8-759-925-76	s	IC SN74HC08NS
IC547	8-759-925-85	s	IC SN74HC32NS
IC548	8-759-925-76	s	IC SN74HC08NS
IC550	8-759-925-76	s	IC SN74HC08NS
IC700	8-759-982-25	s	IC RC78L09A
IC801	8-749-901-21	s	IC BX1461
IC802	8-759-908-17	s	IC TL082CPS
IC803	8-759-012-13	s	IC MC10H125M
IC804	8-759-230-23	s	IC CXD1045AQ
IC805	8-759-941-17	s	IC SN74LS06NS
IC901	8-759-907-81	s	IC SN74LS221NS
IC902	8-759-925-90	s	IC SN74HC74NS
L100	1-459-155-00	s	COIL 45uH
L101	1-459-155-00	s	COIL 45uH
L102	1-459-155-00	s	COIL 45uH
L103	1-459-155-00	s	COIL 45uH
L110	1-459-155-00	s	COIL 45uH
L203	1-408-408-00	s	INDUCTOR 8.2uH
L204	1-408-408-00	s	INDUCTOR 8.2uH
L700	1-459-155-00	s	COIL 45uH
L801	1-410-459-11	s	INDUCTOR 1.2uH
LV400	1-407-574-00	s	COIL, VAR 68uH
LV401	1-407-575-00	s	COIL, VAR 100uH
LV801	1-407-563-00	s	COIL, VAR 1uH
Q1	8-729-271-22	s	TRANSISTOR 2SC2712-G
Q2	8-729-271-22	s	TRANSISTOR 2SC2712-G
Q3	8-729-271-22	s	TRANSISTOR 2SC2712-G
Q4	8-729-271-22	s	TRANSISTOR 2SC2712-G
Q6	8-729-216-22	s	TRANSISTOR 2SA1162
Q7	8-729-216-22	s	TRANSISTOR 2SA1162
Q8	8-729-109-44	s	TRANSISTOR 2SK94
Q9	8-729-203-23	s	TRANSISTOR 2SK389-V
Q10	8-729-271-22	s	TRANSISTOR 2SC2712-G
Q11	8-729-271-22	s	TRANSISTOR 2SC2712-G
Q12	8-729-271-22	s	TRANSISTOR 2SC2712-G
Q14	8-729-216-22	s	TRANSISTOR 2SA1162
Q15	8-729-216-22	s	TRANSISTOR 2SA1162
Q16	8-729-109-44	s	TRANSISTOR 2SK94
Q17	8-729-203-23	s	TRANSISTOR 2SK389-V
Q18	8-729-122-63	s	TRANSISTOR 2SA1226
Q200	8-729-271-22	s	TRANSISTOR 2SC2712-G
Q201	8-729-271-22	s	TRANSISTOR 2SC2712-G
Q202	8-729-271-22	s	TRANSISTOR 2SC2712-G
Q203	8-729-271-22	s	TRANSISTOR 2SC2712-G
Q204	8-729-216-22	s	TRANSISTOR 2SA1162
Q208	8-729-271-22	s	TRANSISTOR 2SC2712-G
Q209	8-729-271-22	s	TRANSISTOR 2SC2712-G
Q210	8-729-271-22	s	TRANSISTOR 2SC2712-G
Q211	8-729-271-22	s	TRANSISTOR 2SC2712-G
Q212	8-729-216-22	s	TRANSISTOR 2SA1162
Q219	8-729-177-33	s	TRANSISTOR 2SD773-4

(DEC-42P BOARD)

Ref. No. or Q'ty	Part No.	SP	Description
Q220	8-729-177-33	s	TRANSISTOR 2SD773-4
Q221	8-729-106-60	s	TRANSISTOR 2SB1115A
Q222	8-729-271-22	s	TRANSISTOR 2SC2712-G
Q223	8-729-109-44	s	TRANSISTOR 2SK94
Q224	8-729-271-22	s	TRANSISTOR 2SC2712-G
Q225	8-729-271-22	s	TRANSISTOR 2SC2712-G
Q226	8-729-271-22	s	TRANSISTOR 2SC2712-G
Q227	8-729-216-22	s	TRANSISTOR 2SA1162
Q400	8-729-271-22	s	TRANSISTOR 2SC2712-G
Q403	8-729-271-22	s	TRANSISTOR 2SC2712-G
Q404	8-729-271-22	s	TRANSISTOR 2SC2712-G
Q405	8-729-271-22	s	TRANSISTOR 2SC2712-G
Q406	8-729-122-63	s	TRANSISTOR 2SA1226
Q407	8-729-109-44	s	TRANSISTOR 2SK94
Q408	8-729-203-23	s	TRANSISTOR 2SK389-V
Q409	8-729-203-23	s	TRANSISTOR 2SK389-V
Q410	8-729-271-22	s	TRANSISTOR 2SC2712-G
Q411	8-729-271-22	s	TRANSISTOR 2SC2712-G
Q412	8-729-271-22	s	TRANSISTOR 2SC2712-G
Q413	8-729-271-22	s	TRANSISTOR 2SC2712-G
Q414	8-729-271-22	s	TRANSISTOR 2SC2712-G
Q415	8-729-271-22	s	TRANSISTOR 2SC2712-G
Q416	8-729-190-12	s	TRANSISTOR 2SC2901
Q417	8-729-271-22	s	TRANSISTOR 2SC2712-G
Q418	8-729-190-12	s	TRANSISTOR 2SC2901
Q419	8-729-271-22	s	TRANSISTOR 2SC2712-G
Q420	8-729-271-22	s	TRANSISTOR 2SC2712-G
Q421	8-729-271-22	s	TRANSISTOR 2SC2712-G
Q422	8-729-271-22	s	TRANSISTOR 2SC2712-G
Q423	8-729-271-22	s	TRANSISTOR 2SC2712-G
Q424	8-729-271-22	s	TRANSISTOR 2SC2712-G
Q425	8-729-271-22	s	TRANSISTOR 2SC2712-G
Q426	8-729-271-22	s	TRANSISTOR 2SC2712-G
Q427	8-729-271-22	s	TRANSISTOR 2SC2712-G
Q428	8-729-271-22	s	TRANSISTOR 2SC2712-G
Q430	8-729-271-22	s	TRANSISTOR 2SC2712-G
Q431	8-729-202-38	s	TRANSISTOR 2SC3326N
Q500	8-729-102-07	s	TRANSISTOR 2SC2223-F13
Q501	8-729-271-22	s	TRANSISTOR 2SC2712-G
Q502	8-729-102-07	s	TRANSISTOR 2SC2223-F13
Q503	8-729-901-01	s	TRANSISTOR DTC144EK
Q801	8-729-175-72	s	TRANSISTOR 2SC2757-T33
Q802	8-729-901-01	s	TRANSISTOR DTC144EK
R16	1-216-651-11	s	METAL, CHIP 1K 0.5% 1/10W
R18	1-216-651-11	s	METAL, CHIP 1K 0.5% 1/10W
R47	1-216-651-11	s	METAL, CHIP 1K 0.5% 1/10W
R49	1-216-651-11	s	METAL, CHIP 1K 0.5% 1/10W
R73	1-216-679-11	s	METAL, CHIP 15K 0.5% 1/10W
R74	1-216-679-11	s	METAL, CHIP 15K 0.5% 1/10W
R97	1-216-667-11	s	METAL, CHIP 4.7K 0.5% 1/10W
R99	1-216-667-11	s	METAL, CHIP 4.7K 0.5% 1/10W
R110	1-249-401-11	s	CARBON 47 5% 1/4W
R111	1-249-397-11	s	CARBON 22 5% 1/4W
R200	1-215-395-00	s	METAL 82 1% 1/6W
R209	1-216-643-11	s	METAL, CHIP 470 0.5% 1/10W
R210	1-216-643-11	s	METAL, CHIP 470 0.5% 1/10W

NOTE: Please see pages 19-51 and 19-52 for the parts that are not listed in the part list.

(DEC-42P BOARD)

Ref. No. or Q'ty	Part No.	SP	Description
R215	1-215-394-00	s	METAL 75 1% 1/6W
R221	1-215-395-00	s	METAL 82 1% 1/6W
R230	1-216-643-11	s	METAL, CHIP 470 0.5% 1/10W
R231	1-216-643-11	s	METAL, CHIP 470 0.5% 1/10W
R234	1-216-643-11	s	METAL, CHIP 470 0.5% 1/10W
R236	1-215-394-00	s	METAL 75 1% 1/6W
R240	1-216-649-11	s	METAL, CHIP 820 0.5% 1/10W
R241	1-216-649-11	s	METAL, CHIP 820 0.5% 1/10W
R244	1-216-679-11	s	METAL, CHIP 15K 0.5% 1/10W
R245	1-216-679-11	s	METAL, CHIP 15K 0.5% 1/10W
R250	1-216-639-11	s	METAL, CHIP 330 0.5% 1/10W
R251	1-216-677-11	s	METAL, CHIP 12K 0.5% 1/10W
R253	1-216-653-11	s	METAL, CHIP 1.2K 0.5% 1/10W
R258	1-216-639-11	s	METAL, CHIP 330 0.5% 1/10W
R259	1-216-677-11	s	METAL, CHIP 12K 0.5% 1/10W
R261	1-216-653-11	s	METAL, CHIP 1.2K 0.5% 1/10W
R266	1-249-484-11	s	CARBON 6.8 5% 1/2W
R269	1-216-675-11	s	METAL, CHIP 10K 0.5% 1/10W
R270	1-216-675-11	s	METAL, CHIP 10K 0.5% 1/10W
R271	1-216-663-11	s	METAL, CHIP 3.3K 0.5% 1/10W
R272	1-216-669-11	s	METAL, CHIP 5.6K 0.5% 1/10W
R274	1-216-660-11	s	METAL, CHIP 2.4K 0.5% 1/10W
R275	1-216-670-11	s	METAL, CHIP 6.2K 0.5% 1/10W
R276	1-247-735-11	s	CARBON 47 5% 1/2W
R277	1-216-675-11	s	METAL, CHIP 10K 0.5% 1/10W
R278	1-216-675-11	s	METAL, CHIP 10K 0.5% 1/10W
R279	1-216-662-11	s	METAL, CHIP 3K 0.5% 1/10W
R280	1-216-677-11	s	METAL, CHIP 12K 0.5% 1/10W
R282	1-216-639-11	s	METAL, CHIP 330 0.5% 1/10W
R283	1-216-639-11	s	METAL, CHIP 330 0.5% 1/10W
R285	1-216-667-11	s	METAL, CHIP 4.7K 0.5% 1/10W
R286	1-216-659-11	s	METAL, CHIP 2.2K 0.5% 1/10W
R288	1-216-655-11	s	METAL, CHIP 1.5K 0.5% 1/10W
R298	1-216-679-11	s	METAL, CHIP 15K 0.5% 1/10W
R310	1-216-660-11	s	METAL, CHIP 2.4K 0.5% 1/10W
R311	1-216-670-11	s	METAL, CHIP 6.2K 0.5% 1/10W
R312	1-216-659-11	s	METAL, CHIP 2.2K 0.5% 1/10W
R313	1-216-659-11	s	METAL, CHIP 2.2K 0.5% 1/10W
R400	1-215-394-00	s	METAL 75 1% 1/6W
R406	1-216-651-11	s	METAL, CHIP 1K 0.5% 1/10W
R407	1-216-651-11	s	METAL, CHIP 1K 0.5% 1/10W
R430	1-215-390-00	s	METAL 51 1% 1/6W
R433	1-216-640-11	s	METAL, CHIP 360 0.5% 1/10W
R437	1-249-397-11	s	CARBON 22 5% 1/4W
R438	1-215-394-00	s	METAL 75 1% 1/6W
R441	1-216-638-11	s	METAL, CHIP 300 0.5% 1/10W
R444	1-216-658-11	s	METAL, CHIP 2K 0.5% 1/10W
R445	1-216-658-11	s	METAL, CHIP 2K 0.5% 1/10W
R446	1-216-651-11	s	METAL, CHIP 1K 0.5% 1/10W
R449	1-216-658-11	s	METAL, CHIP 2K 0.5% 1/10W
R450	1-216-658-11	s	METAL, CHIP 2K 0.5% 1/10W
R451	1-216-651-11	s	METAL, CHIP 1K 0.5% 1/10W
R460	1-216-642-11	s	METAL, CHIP 430 0.5% 1/10W
R465	1-215-390-00	s	METAL 51 1% 1/6W
R477	1-216-651-11	s	METAL, CHIP 1K 0.5% 1/10W
R484	1-216-689-11	s	METAL, CHIP 39K 0.5% 1/10W

(DEC-42P BOARD)

Ref. No. or Q'ty	Part No.	SP	Description
R485	1-216-689-11	s	METAL, CHIP 39K 0.5% 1/10W
R487	1-215-401-11	s	METAL 150 1% 1/6W
R489	1-215-390-00	s	METAL 51 1% 1/6W
R506	1-216-651-11	s	METAL, CHIP 1K 0.5% 1/10W
R507	1-216-661-11	s	METAL, CHIP 2.7K 0.5% 1/10W
R560	1-216-667-11	s	METAL, CHIP 4.7K 0.5% 1/10W
R561	1-216-651-11	s	METAL, CHIP 1K 0.5% 1/10W
R563	1-216-665-11	s	METAL, CHIP 3.9K 0.5% 1/10W
R570	1-216-679-11	s	METAL, CHIP 15K 0.5% 1/10W
R572	1-216-681-11	s	METAL, CHIP 18K 0.5% 1/10W
R616	1-216-681-11	s	METAL, CHIP 18K 0.5% 1/10W
R623	1-216-677-11	s	METAL, CHIP 12K 0.5% 1/10W
R632	1-216-684-11	s	METAL, CHIP 24K 0.5% 1/10W
R634	1-216-651-11	s	METAL, CHIP 1K 0.5% 1/10W
R635	1-216-651-11	s	METAL, CHIP 1K 0.5% 1/10W
R636	1-216-657-11	s	METAL, CHIP 1.8K 0.5% 1/10W
R701	1-215-399-00	s	METAL 120 1% 1/6W
R702	1-215-401-11	s	METAL 150 1% 1/6W
R801	1-216-682-11	s	METAL, CHIP 20K 0.5% 1/10W
R803	1-216-677-11	s	METAL, CHIP 12K 0.5% 1/10W
R804	1-216-667-11	s	METAL, CHIP 4.7K 0.5% 1/10W
RV1	1-237-519-21	s	RES, ADJ, METAL 20K
RV2	1-237-515-21	s	RES, ADJ, METAL 1K
RV3	1-237-519-21	s	RES, ADJ, METAL 20K
RV4	1-237-519-21	s	RES, ADJ, METAL 20K
RV5	1-237-515-21	s	RES, ADJ, METAL 1K
RV6	1-237-519-21	s	RES, ADJ, METAL 20K
RV7	1-237-517-21	s	RES, ADJ, METAL 5K
RV8	1-237-517-21	s	RES, ADJ, METAL 5K
RV200	1-237-515-21	s	RES, ADJ, METAL 1K
RV201	1-237-515-21	s	RES, ADJ, METAL 1K
RV202	1-237-515-21	s	RES, ADJ, METAL 1K
RV203	1-237-514-21	s	RES, ADJ, METAL 500
RV204	1-237-514-21	s	RES, ADJ, METAL 500
RV205	1-237-515-21	s	RES, ADJ, METAL 1K
RV206	1-237-516-21	s	RES, ADJ, METAL 2K
RV207	1-237-516-21	s	RES, ADJ, METAL 2K
RV208	1-237-515-21	s	RES, ADJ, METAL 1K
RV209	1-237-515-21	s	RES, ADJ, METAL 1K
RV402	1-237-516-21	s	RES, ADJ, METAL 2K
RV403	1-237-518-21	s	RES, ADJ, METAL 10K
RV404	1-237-517-21	s	RES, ADJ, METAL 5K
RV405	1-237-517-21	s	RES, ADJ, METAL 5K
RV406	1-237-512-21	s	RES, ADJ, METAL 100
RV407	1-237-513-21	s	RES, VAR METAL 200
RV408	1-237-519-21	s	RES, ADJ, METAL 20K
RV410	1-237-524-21	s	RES, ADJ, METAL 1M
RV411	1-237-519-21	s	RES, ADJ, METAL 20K
RV412	1-237-515-21	s	RES, ADJ, METAL 1K
RV502	1-237-519-21	s	RES, ADJ, METAL 20K
RV503	1-237-519-21	s	RES, ADJ, METAL 20K
RV504	1-237-517-21	s	RES, ADJ, METAL 5K
RV505	1-237-519-21	s	RES, ADJ, METAL 20K
RV511	1-237-517-21	s	RES, ADJ, METAL 5K
RV512	1-237-517-21	s	RES, ADJ, METAL 5K

NOTE: Please see pages 19-51 and 19-52 for the parts that are not listed in the part list.

(DEC-42P BOARD)

Ref. No. or Q'ty	Part No.	SP	Description
S500	1-570-857-11	s	SWITCH, SLIDE
TH1	1-800-202-XX	s	THERMISTOR S-10K
TH2	1-800-202-XX	s	THERMISTOR S-10K
#X1	1-579-103-21	s	VCO, 17.734475MHz
X501	1-567-863-11	s	CRYSTAL, 10.664135MHz

DEC-46P BOARD

Ref. No. or Q'ty	Part No.	SP	Description
1pc	A-6727-067-A	o	MOUNTED CIRCUIT BOARD, DEC-46P
2pcs	7-622-207-05	s	N 2.6, TYPE 2
2pcs	7-628-254-30	s	SCREW +PS 2.6X10
C3	1-126-177-11	s	ELECT 100uF 20% 10V
C6	1-126-177-11	s	ELECT 100uF 20% 10V
C9	1-130-483-00	s	MYLAR 0.01uF 5% 50V
C10	1-107-204-00	s	MICA 12PF 5% 500V
C26	1-131-341-00	s	TANTALUM 0.1uF 10% 35V
C37	1-107-086-00	s	MICA 110PF 5% 50V
C38	1-131-341-00	s	TANTALUM 0.1uF 10% 35V
C39	1-130-491-00	s	MYLAR 0.047uF 5% 50V
C40	1-162-888-11	s	CERAMIC 560PF 5% 50V
C41	1-162-888-11	s	CERAMIC 560PF 5% 50V
C44	1-130-472-00	s	MYLAR 0.0012uF 5% 50V
C45	1-162-724-11	s	CERAMIC 390PF 1% 50V
C46	1-130-479-00	s	MYLAR 0.0047uF 5% 50V
C47	1-130-483-00	s	MYLAR 0.01uF 5% 50V
C48	1-126-103-11	s	ELECT 470uF 20% 16V
C49	1-126-103-11	s	ELECT 470uF 20% 16V
C50	1-126-103-11	s	ELECT 470uF 20% 16V
C65	1-107-206-00	s	MICA 15PF 5% 500V
C102	1-130-487-00	s	MYLAR 0.022uF 5% 50V
C103	1-130-487-00	s	MYLAR 0.022uF 5% 50V
C104	1-130-487-00	s	MYLAR 0.022uF 5% 50V
C105	1-126-103-11	s	ELECT 470uF 20% 16V
C108	1-102-074-00	s	CERAMIC 0.001uF 10% 50V
C112	1-131-347-00	s	TANTALUM 1uF 10% 35V
C113	1-131-347-00	s	TANTALUM 1uF 10% 35V
C114	1-130-487-00	s	MYLAR 0.022uF 5% 50V
C115	1-130-495-00	s	MYLAR 0.1uF 5% 50V
C117	1-124-638-11	s	ELECT 22uF 20% 10V
C118	1-124-638-11	s	ELECT 22uF 20% 10V
C123	1-126-177-11	s	ELECT 100uF 20% 10V
C125	1-131-347-00	s	TANTALUM 1uF 10% 35V
C127	1-131-347-00	s	TANTALUM 1uF 10% 35V
C128	1-131-347-00	s	TANTALUM 1uF 10% 35V
C129	1-131-347-00	s	TANTALUM 1uF 10% 35V
C134	1-124-257-00	s	ELECT 2.2uF 20% 50V
C135	1-131-341-00	s	TANTALUM 0.1uF 10% 35V
C140	1-131-343-00	s	TANTALUM 0.22uF 10% 35V
C141	1-131-343-00	s	TANTALUM 0.22uF 10% 35V
C142	1-131-341-00	s	TANTALUM 0.1uF 10% 35V
C143	1-126-177-11	s	ELECT 100uF 20% 10V
C145	1-126-177-11	s	ELECT 100uF 20% 10V
C147	1-107-042-00	s	MICA 2.2PF 500V
C150	1-130-471-00	s	MYLAR 0.001uF 5% 50V
C151	1-107-049-00	s	MICA 8.2PF 500V
C152	1-107-157-00	s	MICA 27PF 5% 500V
C153	1-131-347-00	s	TANTALUM 1uF 10% 35V
C155	1-131-347-00	s	TANTALUM 1uF 10% 35V
C156	1-131-341-00	s	TANTALUM 0.1uF 10% 35V
C157	1-126-103-11	s	ELECT 470uF 20% 16V
C159	1-126-103-11	s	ELECT 470uF 20% 16V
C163	1-107-158-00	s	MICA 30PF 5% 500V
C164	1-107-206-00	s	MICA 15PF 5% 500V
C165	1-126-177-11	s	ELECT 100uF 20% 10V

NOTE: Please see pages 19-51 and 19-52 for the parts that are not listed in the part list.

(DEC-46P BOARD)

Ref. No. or Q'ty	Part No.	SP	Description
C166	1-131-345-00	s	TANTALUM 0.47uF 10% 35V
C169	1-107-208-00	s	MICA 18PF 5% 500V
C170	1-107-206-00	s	MICA 15PF 5% 500V
C171	1-107-158-00	s	MICA 30PF 5% 500V
C172	1-107-204-00	s	MICA 12PF 5% 500V
C173	1-107-158-00	s	MICA 30PF 5% 500V
C174	1-109-541-00	s	MICA 200PF 5% 100V
C175	1-126-176-11	s	ELECT 220uF 20% 10V
C177	1-130-495-00	s	MYLAR 0.1uF 5% 50V
C182	1-107-208-00	s	MICA 18PF 5% 500V
C201	1-126-177-11	s	ELECT 100uF 20% 10V
C205	1-126-177-11	s	ELECT 100uF 20% 10V
C208	1-163-100-00	s	CERAMIC, CHIP 20PF 5% 50V
CN105	1-506-748-11	s	CONNECTOR, DIN 96P, MALE
CV1	1-141-245-00	s	CAP, TRIMMER 30PF
CV101	1-141-245-00	s	CAP, TRIMMER 30PF
D1	8-719-110-08	s	DIODE RD8.2ES-B2
D2	8-719-400-18	s	DIODE MA152WK
D4	8-719-400-18	s	DIODE MA152WK
D11	8-719-907-19	s	DIODE, VARICAP FC52M-5
D12	8-719-907-19	s	DIODE, VARICAP FC52M-5
D13	8-719-101-97	s	DIODE 1SS97-1
D14	8-719-101-97	s	DIODE 1SS97-1
D15	8-719-400-18	s	DIODE MA152WK
D16	8-719-101-97	s	DIODE 1SS97-1
D17	8-719-101-97	s	DIODE 1SS97-1
D18	8-719-400-18	s	DIODE MA152WK
DL1	1-415-404-31	s	DELAY LINE 226ns
DL2	1-415-404-31	s	DELAY LINE 226ns
DL3	1-415-404-11	s	DELAY LINE 226nS
DL4	1-415-309-00	s	DELAY LINE 350nS
DL5	1-415-309-00	s	DELAY LINE 350nS
IC1	8-752-030-81	s	IC CXA1040M
IC2	8-752-030-80	s	IC CXA1039M
IC3	8-759-009-07	s	IC MC14053BF
IC4	8-759-907-81	s	IC SN74LS221NS
IC5	8-759-907-81	s	IC SN74LS221NS
IC6	8-759-907-81	s	IC SN74LS221NS
IC7	8-759-925-90	s	IC SN74HC74NS
IC8	8-759-201-47	s	IC TA7357AP
IC9	8-759-982-34	s	IC RC78M09FA
IC11	8-759-982-52	s	IC RC79M05FA
IC13	8-759-400-06	s	IC AN608P
IC14	8-759-400-06	s	IC AN608P
IC15	8-759-402-33	s	IC AN607P
IC16	8-752-201-30	s	IC CX22013
IC17	8-752-030-30	s	IC CXA1020P
IC18	8-759-402-33	s	IC AN607P
IC19	8-759-632-99	s	IC M5215TL
IC20	8-759-969-13	s	IC SN16913P
IC21	8-759-008-67	s	IC MC14066BF
IC22	8-759-632-99	s	IC M5215TL
IC23	8-759-908-17	s	IC TL082CPS
IC24	1-808-743-11	s	IC BX6389

(DEC-46P BOARD)

Ref. No. or Q'ty	Part No.	SP	Description
IC201	8-759-941-27	s	IC MB4002PF
IC202	8-759-941-27	s	IC MB4002PF
IC203	8-759-925-76	s	IC SN74HC08NS
L10	1-410-471-11	s	INDUCTOR 12uH
L11	1-459-155-00	s	COIL 45uH
L12	1-459-155-00	s	COIL 45uH
L13	1-459-155-00	s	COIL 45uH
L14	1-410-116-11	s	INDUCTOR 560UH
L15	1-408-419-00	s	INDUCTOR 68uH
L22	1-410-471-11	s	INDUCTOR 12uH
L30	1-408-408-00	s	INDUCTOR 8.2uH
L31	1-410-468-11	s	INDUCTOR 6.8uH
L32	1-408-408-00	s	INDUCTOR 8.2uH
L37	1-408-406-00	s	INDUCTOR 5.6uH
L38	1-408-408-00	s	INDUCTOR 8.2uH
L205	1-408-411-00	s	INDUCTOR 15uH
LV1	1-407-575-00	s	COIL, VAR 100uH
Q1	8-729-271-23	s	TRANSISTOR 2SC2712
Q2	8-729-271-23	s	TRANSISTOR 2SC2712
Q3	8-729-271-23	s	TRANSISTOR 2SC2712
Q4	8-729-271-23	s	TRANSISTOR 2SC2712
Q5	8-729-271-23	s	TRANSISTOR 2SC2712
Q6	8-729-216-22	s	TRANSISTOR 2SA1162
Q7	8-729-271-23	s	TRANSISTOR 2SC2712
Q8	8-729-271-23	s	TRANSISTOR 2SC2712
Q9	8-729-271-23	s	TRANSISTOR 2SC2712
Q10	8-729-271-23	s	TRANSISTOR 2SC2712
Q11	8-729-271-23	s	TRANSISTOR 2SC2712
Q12	8-729-271-23	s	TRANSISTOR 2SC2712
Q13	8-729-271-23	s	TRANSISTOR 2SC2712
Q14	8-729-271-23	s	TRANSISTOR 2SC2712
Q15	8-729-271-23	s	TRANSISTOR 2SC2712
Q16	8-729-216-22	s	TRANSISTOR 2SA1162
Q17	8-729-271-23	s	TRANSISTOR 2SC2712
Q18	8-729-271-23	s	TRANSISTOR 2SC2712
Q19	8-729-271-23	s	TRANSISTOR 2SC2712
Q21	8-729-271-23	s	TRANSISTOR 2SC2712
Q22	8-729-190-12	s	TRANSISTOR 2SC2901
Q23	8-729-271-23	s	TRANSISTOR 2SC2712
Q24	8-729-271-23	s	TRANSISTOR 2SC2712
Q25	8-729-271-23	s	TRANSISTOR 2SC2712
Q26	8-729-216-22	s	TRANSISTOR 2SA1162
Q27	8-729-271-23	s	TRANSISTOR 2SC2712
Q28	8-729-271-23	s	TRANSISTOR 2SC2712
Q29	8-729-216-22	s	TRANSISTOR 2SA1162
Q30	8-729-216-22	s	TRANSISTOR 2SA1162
Q31	8-729-271-23	s	TRANSISTOR 2SC2712
Q32	8-729-216-22	s	TRANSISTOR 2SA1162
Q33	8-729-271-23	s	TRANSISTOR 2SC2712
Q34	8-729-271-23	s	TRANSISTOR 2SC2712
Q35	8-729-271-23	s	TRANSISTOR 2SC2712
Q36	8-729-271-23	s	TRANSISTOR 2SC2712
Q37	8-729-271-23	s	TRANSISTOR 2SC2712
Q38	8-729-271-23	s	TRANSISTOR 2SC2712
Q39	8-729-122-63	s	TRANSISTOR 2SA1226

NOTE: Please see pages 19-51 and 19-52 for the parts that are not listed in the part list.

(DEC-46P BOARD)

Ref. No. or Q'ty	Part No.	SP	Description
Q40	8-729-271-23	s	TRANSISTOR 2SC2712
Q41	8-729-122-63	s	TRANSISTOR 2SA1226
Q46	8-729-102-07	s	TRANSISTOR 2SC2223-F13
Q47	8-729-901-01	s	TRANSISTOR DTC144EK
Q201	8-729-201-26	s	TRANSISTOR 2SC2715
Q202	8-729-201-26	s	TRANSISTOR 2SC2715
Q203	8-729-201-26	s	TRANSISTOR 2SC2715
R1	1-216-619-11	s	METAL, CHIP 47 0.5% 1/10W
R2	1-216-641-11	s	METAL, CHIP 390 0.5% 1/10W
R4	1-216-677-11	s	METAL, CHIP 12K 0.5% 1/10W
R5	1-216-680-11	s	METAL, CHIP 16K 0.5% 1/10W
R9	1-216-660-11	s	METAL, CHIP 2.4K 0.5% 1/10W
R10	1-216-660-11	s	METAL, CHIP 2.4K 0.5% 1/10W
R14	1-216-631-11	s	METAL, CHIP 150 0.5% 1/10W
R17	1-216-648-11	s	METAL, CHIP 750 0.5% 1/10W
R18	1-216-675-11	s	METAL, CHIP 10K 0.5% 1/10W
R19	1-216-673-11	s	METAL, CHIP 8.2K 0.5% 1/10W
R20	1-216-666-11	s	METAL, CHIP 4.3K 0.5% 1/10W
R21	1-216-687-11	s	METAL, CHIP 33K 0.5% 1/10W
R22	1-216-670-11	s	METAL, CHIP 6.2K 0.5% 1/10W
R25	1-216-655-11	s	METAL, CHIP 1.5K 0.5% 1/10W
R26	1-216-655-11	s	METAL, CHIP 1.5K 0.5% 1/10W
R31	1-216-635-11	s	METAL, CHIP 220 0.5% 1/10W
R32	1-216-635-11	s	METAL, CHIP 220 0.5% 1/10W
R38	1-216-643-11	s	METAL, CHIP 470 0.5% 1/10W
R41	1-216-643-11	s	METAL, CHIP 470 0.5% 1/10W
R47	1-216-645-11	s	METAL, CHIP 560 0.5% 1/10W
R51	1-216-652-11	s	METAL, CHIP 1.1K 0.5% 1/10W
R52	1-216-660-11	s	METAL, CHIP 2.4K 0.5% 1/10W
R65	1-216-661-11	s	METAL, CHIP 2.7K 0.5% 1/10W
R66	1-216-651-11	s	METAL, CHIP 1K 0.5% 1/10W
R104	1-216-635-11	s	METAL, CHIP 220 0.5% 1/10W
R105	1-216-635-11	s	METAL, CHIP 220 0.5% 1/10W
R108	1-216-635-11	s	METAL, CHIP 220 0.5% 1/10W
R109	1-216-635-11	s	METAL, CHIP 220 0.5% 1/10W
R111	1-216-687-11	s	METAL, CHIP 33K 0.5% 1/10W
R112	1-216-687-11	s	METAL, CHIP 33K 0.5% 1/10W
R113	1-216-643-11	s	METAL, CHIP 470 0.5% 1/10W
R114	1-216-650-11	s	METAL, CHIP 910 0.5% 1/10W
R125	1-215-390-00	s	METAL 51 1% 1/6W
R134	1-216-643-11	s	METAL, CHIP 470 0.5% 1/10W
R136	1-215-390-00	s	METAL 51 1% 1/6W
R138	1-216-683-11	s	METAL, CHIP 22K 0.5% 1/10W
R139	1-216-679-11	s	METAL, CHIP 15K 0.5% 1/10W
R149	1-216-634-11	s	METAL, CHIP 200 0.5% 1/10W
R150	1-216-634-11	s	METAL, CHIP 200 0.5% 1/10W
R154	1-216-639-11	s	METAL, CHIP 330 0.5% 1/10W
R155	1-216-651-11	s	METAL, CHIP 1K 0.5% 1/10W
R156	1-216-634-11	s	METAL, CHIP 200 0.5% 1/10W
R157	1-216-682-11	s	METAL, CHIP 20K 0.5% 1/10W
R159	1-216-651-11	s	METAL, CHIP 1K 0.5% 1/10W
R162	1-216-643-11	s	METAL, CHIP 470 0.5% 1/10W
R163	1-216-649-11	s	METAL, CHIP 820 0.5% 1/10W
R165	1-216-634-11	s	METAL, CHIP 200 0.5% 1/10W
R166	1-216-634-11	s	METAL, CHIP 200 0.5% 1/10W
R169	1-216-651-11	s	METAL, CHIP 1K 0.5% 1/10W

(DEC-46P BOARD)

Ref. No. or Q'ty	Part No.	SP	Description
R175	1-216-644-11	s	METAL, CHIP 510 0.5% 1/10W
R177	1-216-649-11	s	METAL, CHIP 820 0.5% 1/10W
R180	1-216-675-11	s	METAL, CHIP 10K 0.5% 1/10W
R182	1-216-672-11	s	METAL, CHIP 7.5K 0.5% 1/10W
R183	1-216-651-11	s	METAL, CHIP 1K 0.5% 1/10W
R184	1-216-639-11	s	METAL, CHIP 330 0.5% 1/10W
R185	1-216-635-11	s	METAL, CHIP 220 0.5% 1/10W
R195	1-216-651-11	s	METAL, CHIP 1K 0.5% 1/10W
R196	1-216-684-11	s	METAL, CHIP 24K 0.5% 1/10W
R205	1-216-637-11	s	METAL, CHIP 270 0.5% 1/10W
R206	1-216-651-11	s	METAL, CHIP 1K 0.5% 1/10W
R207	1-216-658-11	s	METAL, CHIP 2K 0.5% 1/10W
R208	1-216-682-11	s	METAL, CHIP 20K 0.5% 1/10W
R209	1-216-679-11	s	METAL, CHIP 15K 0.5% 1/10W
R212	1-216-663-11	s	METAL, CHIP 3.3K 0.5% 1/10W
R213	1-216-651-11	s	METAL, CHIP 1K 0.5% 1/10W
R214	1-216-663-11	s	METAL, CHIP 3.3K 0.5% 1/10W
R215	1-216-651-11	s	METAL, CHIP 1K 0.5% 1/10W
R216	1-216-644-11	s	METAL, CHIP 510 0.5% 1/10W
R217	1-216-644-11	s	METAL, CHIP 510 0.5% 1/10W
R220	1-216-692-11	s	METAL, CHIP 51K 0.5% 1/10W
R221	1-216-633-11	s	METAL, CHIP 180 0.5% 1/10W
RV1	1-237-514-21	s	RES, ADJ, METAL 500
RV2	1-237-515-21	s	RES, ADJ, METAL 1K
RV4	1-237-515-21	s	RES, ADJ, METAL 1K
RV5	1-237-515-21	s	RES, ADJ, METAL 1K
RV6	1-237-516-21	s	RES, ADJ, METAL 2K
RV7	1-237-517-21	s	RES, ADJ, METAL 5K
RV8	1-237-520-21	s	RES, ADJ, METAL 50K
RV11	1-237-515-21	s	RES, ADJ, METAL 1K
RV12	1-237-517-21	s	RES, ADJ, METAL 5K
RV13	1-237-515-21	s	RES, ADJ, METAL 1K
RV14	1-237-515-21	s	RES, ADJ, METAL 1K
RV15	1-237-501-21	s	RES, ADJ, METAL 2K
RV16	1-237-515-21	s	RES, ADJ, METAL 1K
RV201	1-237-514-21	s	RES, ADJ, METAL 500
RV202	1-237-514-21	s	RES, ADJ, METAL 500
S1	1-570-857-11	s	SWITCH, SLIDE
TH1	1-800-198-XX	s	THERMISTOR S-1K
TH2	1-800-202-XX	s	THERMISTOR S-10K
TH3	1-800-198-XX	s	THERMISTOR S-1K
TH4	1-800-198-XX	s	THERMISTOR S-1K
TH5	1-800-202-XX	s	THERMISTOR S-10K

NOTE: Please see pages 19-51 and 19-52 for the parts that are not listed in the part list.

DM-56PC BOARD

Ref. No. or Q'ty	Part No.	SP	Description
1pc	A-6727-225-A	o	MOUNTED CIRCUIT BOARD, DM-56PC
This board includes DUS-259, DUS-269, DUS-288, DUS-345, EQ-26 and EQ-28 boards. See "DUS-259 BOARD", "DUS-269 BOARD", and "EQ-28 BOARD" for detailes of them.			
1pc	7-621-759-45	s	+PSW, 2.6X6
4pcs	7-622-207-05	s	N 2.6, TYPE 2
4pcs	7-628-254-30	s	SCREW +PS 2.6X10
C1	1-124-443-00	s	ELECT 100uF 20% 10V
C3	1-124-443-00	s	ELECT 100uF 20% 10V
C15	1-107-206-00	s	MICA 15PF 5% 500V
C17	1-124-443-00	s	ELECT 100uF 20% 10V
C19	1-124-443-00	s	ELECT 100uF 20% 10V
C33	1-107-163-00	s	MICA 47PF 5% 500V
C38	1-124-443-00	s	ELECT 100uF 20% 10V
C46	1-124-443-00	s	ELECT 100uF 20% 10V
C114	1-123-875-11	s	ELECT 10uF 20% 50V
C121	1-124-443-00	s	ELECT 100uF 20% 10V
C123	1-107-206-00	s	MICA 15PF 5% 500V
C124	1-107-206-00	s	MICA 15PF 5% 500V
C125	1-107-044-00	s	MICA 3.3PF 500V
C132	1-107-158-00	s	MICA 30PF 5% 500V
C135	1-107-049-00	s	MICA 8.2PF 500V
C136	1-107-210-00	s	MICA 22PF 5% 500V
C137	1-107-085-00	s	MICA 100PF 5% 50V
C138	1-107-043-00	s	MICA 2.7PF 500V
C139	1-107-204-00	s	MICA 12PF 5% 500V
C140	1-107-204-00	s	MICA 12PF 5% 500V
C142	1-124-443-00	s	ELECT 100uF 20% 10V
C210	1-124-443-00	s	ELECT 100uF 20% 10V
C212	1-130-483-00	s	MYLAR 0.01uF 5% 50V
C217	1-124-443-00	s	ELECT 100uF 20% 10V
C219	1-130-471-00	s	MYLAR 0.001uF 5% 50V
C301	1-124-472-11	s	ELECT 470uF 20% 10V
C308	1-107-205-00	s	MICA 13PF 5% 500V
C310	1-124-443-00	s	ELECT 100uF 20% 10V
C312	1-107-339-11	s	MICA 630.8PF 0.25% 100V
C314	1-124-472-11	s	ELECT 470uF 20% 10V
C316	1-124-472-11	s	ELECT 470uF 20% 10V
C318	1-124-472-11	s	ELECT 470uF 20% 10V
C321	1-126-176-11	s	ELECT 220uF 20% 10V
C322	1-124-446-11	s	ELECT 47uF 20% 10V
C324	1-126-176-11	s	ELECT 220uF 20% 10V
C325	1-124-443-00	s	ELECT 100uF 20% 10V
C327	1-124-443-00	s	ELECT 100uF 20% 10V
C332	1-130-475-00	s	MYLAR 0.0022uF 5% 50V
C334	1-124-472-11	s	ELECT 470uF 20% 10V
C337	1-124-472-11	s	ELECT 470uF 20% 10V
C340	1-124-443-00	s	ELECT 100uF 20% 10V
C342	1-163-111-00	s	CERAMIC, CHIP 56PF 5% 50V
C348	1-107-157-00	s	MICA 27PF 5% 500V
C350	1-107-168-00	s	MICA 91PF 5% 500V
#C351	1-107-049-00	s	MICA 8.2PF 500V
C401	1-124-472-11	s	ELECT 470uF 20% 10V
C403	1-124-472-11	s	ELECT 470uF 20% 10V
C405	1-126-176-11	s	ELECT 220uF 20% 10V

(DM-56PC BOARD)

Ref. No. or Q'ty	Part No.	SP	Description
C406	1-124-472-11	s	ELECT 470uF 20% 10V
C409	1-107-202-00	s	MICA 10PF 5% 500V
C421	1-124-120-11	s	ELECT 220uF 20% 25V
C425	1-107-046-00	s	MICA 4.7PF 500V
C431	1-135-155-21	s	TANTAL CHIP 4.7uF 10% 16V
C432	1-135-159-21	s	TANTALUM, CHIP 10uF 10% 20V
C436	1-135-159-21	s	TANTALUM, CHIP 10uF 10% 20V
C437	1-130-483-00	s	MYLAR 0.01uF 5% 50V
C444	1-107-202-00	s	MICA 10PF 5% 500V
C445	1-126-176-11	s	ELECT 220uF 20% 10V
C446	1-126-176-11	s	ELECT 220uF 20% 10V
C503	1-124-443-00	s	ELECT 100uF 20% 10V
C507	1-124-443-00	s	ELECT 100uF 20% 10V
C514	1-124-443-00	s	ELECT 100uF 20% 10V
C518	1-124-443-00	s	ELECT 100uF 20% 10V
C527	1-124-443-00	s	ELECT 100uF 20% 10V
C528	1-162-716-11	s	CERAMIC 180PF 1% 50V
C529	1-162-728-11	s	CERAMIC 560PF 1% 50V
C552	1-123-875-11	s	ELECT 10uF 20% 50V
C604	1-107-159-00	s	MICA 33PF 5% 500V
C607	1-124-443-00	s	ELECT 100uF 20% 10V
C613	1-130-483-00	s	MYLAR 0.01uF 5% 50V
C619	1-124-443-00	s	ELECT 100uF 20% 10V
C621	1-130-471-00	s	MYLAR 0.001uF 5% 50V
C628	1-107-049-00	s	MICA 8.2PF 500V
C629	1-107-047-00	s	MICA 5.6PF 500V
C630	1-124-443-00	s	ELECT 100uF 20% 10V
C633	1-107-047-00	s	MICA 5.6PF 500V
C704	1-124-472-11	s	ELECT 470uF 20% 10V
C708	1-107-211-00	s	MICA 24PF 5% 500V
C711	1-124-443-00	s	ELECT 100uF 20% 10V
C713	1-124-472-11	s	ELECT 470uF 20% 10V
C714	1-107-340-11	s	MICA 651.2PF 0.25% 100V
C715	1-126-176-11	s	ELECT 220uF 20% 10V
C717	1-124-472-11	s	ELECT 470uF 20% 10V
C719	1-126-176-11	s	ELECT 220uF 20% 10V
C721	1-124-472-11	s	ELECT 470uF 20% 10V
C723	1-124-472-11	s	ELECT 470uF 20% 10V
C724	1-126-176-11	s	ELECT 220uF 20% 10V
C801	1-124-472-11	s	ELECT 470uF 20% 10V
C803	1-124-472-11	s	ELECT 470uF 20% 10V
C805	1-124-472-11	s	ELECT 470uF 20% 10V
C810	1-126-176-11	s	ELECT 220uF 20% 10V
C822	1-126-176-11	s	ELECT 220uF 20% 10V
C823	1-130-487-00	s	MYLAR 0.022uF 5% 50V
C827	1-126-176-11	s	ELECT 220uF 20% 10V
C828	1-126-176-11	s	ELECT 220uF 20% 10V
C903	1-124-443-00	s	ELECT 100uF 20% 10V
C912	1-124-443-00	s	ELECT 100uF 20% 10V
C914	1-124-472-11	s	ELECT 470uF 20% 10V
C917	1-124-471-00	s	ELECT 1000uF 20% 6.3V
C918	1-126-103-11	s	ELECT 470uF 20% 16V
C919	1-124-472-11	s	ELECT 470uF 20% 10V
C920	1-124-471-00	s	ELECT 1000uF 20% 6.3V
C921	1-124-471-00	s	ELECT 1000uF 20% 6.3V
C926	1-124-446-11	s	ELECT 47uF 20% 10V

NOTE: Please see pages 19-51 and 19-52 for the parts that are not listed in the part list.

(DM-56PC BOARD)

Ref. No. or Q'ty	Part No.	SP	Description
C927	1-126-154-11	s	ELECT 47uF 20% 6.3V
C928	1-124-471-00	s	ELECT 1000uF 20% 6.3V
C929	1-126-103-11	s	ELECT 470uF 20% 16V
C933	1-126-154-11	s	ELECT 47uF 20% 6.3V
CN110	1-506-746-11	s	CONNECTOR, DIN 48P, MALE
CN111	1-506-748-11	s	CONNECTOR, DIN 96P, MALE
CV347	1-141-298-11	s	CAP, TRIMMER 10PF
D101	8-719-109-94	s	DIODE RD6.2ES-B3
D102	8-719-911-19	s	DIODE 1SS119
D201	8-719-800-76	s	DIODE 1SS226
D202	8-719-800-76	s	DIODE 1SS226
D301	8-719-109-85	s	DIODE RD5.1ES-B2
D302	8-719-800-76	s	DIODE 1SS226
D303	8-719-800-76	s	DIODE 1SS226
D304	8-719-109-94	s	DIODE RD6.2ES-B3
D305	8-719-109-94	s	DIODE RD6.2ES-B3
D401	8-719-800-76	s	DIODE 1SS226
D500	8-719-104-10	s	DIODE 1SS99
D601	8-719-800-76	s	DIODE 1SS226
D701	8-719-109-85	s	DIODE RD5.1ES-B2
D702	8-719-800-76	s	DIODE 1SS226
D703	8-719-109-94	s	DIODE RD6.2ES-B3
D704	8-719-109-94	s	DIODE RD6.2ES-B3
D801	8-719-800-76	s	DIODE 1SS226
D802	8-719-800-76	s	DIODE 1SS226
D901	8-719-800-76	s	DIODE 1SS226
D902	8-719-800-76	s	DIODE 1SS226
DL1	1-415-154-00	s	DELAY LINE 35nS
DL501	1-415-162-21	s	DELAY LINE 50nS
FB301	1-535-178-00	s	BEAD, FERRITE
FB509	1-535-178-00	s	BEAD, FERRITE
FB701	1-535-178-00	s	BEAD, FERRITE
FB901	1-535-178-00	s	BEAD, FERRITE
FB902	1-535-178-00	s	BEAD, FERRITE
FB903	1-535-178-00	s	BEAD, FERRITE
FB904	1-535-178-00	s	BEAD, FERRITE
FL301	1-236-092-12	s	FILTER, LOW-PASS
FL302	1-236-024-11	s	FILTER, LOW-PASS
FL303	1-235-321-11	s	FILTER, LOW-PASS
FL304	1-235-546-11	s	FILTER, BANDELIMINATION 4.43MHz
FL701	1-236-185-11	s	FILTER, LOW-PASS
IC1	8-752-015-81	s	IC CX20158
IC2	8-752-015-81	s	IC CX20158
IC3	8-759-112-53	s	IC UPC1663G
IC4	8-759-112-53	s	IC UPC1663G
IC5	8-752-015-81	s	IC CX20158
IC6	8-729-801-46	s	TRANSISTOR 2SC3064F-6B-TJ
IC101	8-766-001-49	s	TRANSISTOR TX429M
IC102	8-759-969-13	s	IC SN16913P
IC103	8-759-981-92	s	IC RC4558M
IC104	1-464-602-31	s	CIRCUIT UNIT, HF
IC105	8-752-006-12	s	IC CX20061
IC201	8-759-981-51	s	IC RC1496M
IC202	8-759-908-17	s	IC TL082CPS

(DM-56PC BOARD)

Ref. No. or Q'ty	Part No.	SP	Description
IC203	8-759-947-09	s	IC SN75107ANS
IC204	8-759-908-17	s	IC TL082CPS
IC205	8-759-009-07	s	IC MC14053BF
IC207	8-749-920-42	s	IC BX-1098L
IC301	8-759-012-00	s	IC MC10H116M
IC302	8-759-001-98	s	IC MC10198L
IC303	8-752-015-81	s	IC CX20158
IC304	8-752-015-81	s	IC CX20158
IC305	8-759-112-53	s	IC UPC1663G
IC306	8-752-006-12	s	IC CX20061
IC401	8-752-030-80	s	IC CXA1039M
IC402	8-741-154-01	s	IC SBX1540-31
IC403	8-752-015-81	s	IC CX20158
IC501	8-752-015-81	s	IC CX20158
IC502	8-759-112-53	s	IC UPC1663G
IC503	8-752-015-81	s	IC CX20158
IC504	8-759-112-53	s	IC UPC1663G
IC505	8-752-015-81	s	IC CX20158
IC506	8-729-801-46	s	TRANSISTOR 2SC3064F-6B-TJ
IC507	8-759-969-13	s	IC SN16913P
IC508	8-759-981-92	s	IC RC4558M
IC509	8-766-001-49	s	TRANSISTOR TX429M
IC601	8-759-981-51	s	IC RC1496M
IC602	8-759-908-17	s	IC TL082CPS
IC603	8-759-947-09	s	IC SN75107ANS
IC604	1-464-602-21	s	CIRCUIT UNIT, HF
IC605	8-752-006-12	s	IC CX20061
IC701	8-759-012-00	s	IC MC10H116M
IC702	8-759-001-98	s	IC MC10198L
IC703	8-759-112-53	s	IC UPC1663G
IC704	8-752-015-81	s	IC CX20158
IC801	8-741-154-00	s	IC SBX1540-21
IC802	8-752-015-81	s	IC CX20158
IC901	8-759-008-36	s	IC MC74HC4049F
IC902	8-759-008-36	s	IC MC74HC4049F
IC903	8-759-925-76	s	IC SN74HC08NS
IC904	8-759-925-76	s	IC SN74HC08NS
IC905	8-759-008-37	s	IC MC74HC4050F
IC906	8-759-925-76	s	IC SN74HC08NS
IC907	8-759-941-17	s	IC SN74LS06NS
IC908	8-759-982-10	s	IC RC7809FA
IC909	8-759-982-05	s	IC RC7805FA
L104	1-408-408-00	s	INDUCTOR 8.2uH
L107	1-410-464-11	s	INDUCTOR 3.3uH
L108	1-408-408-00	s	INDUCTOR 8.2uH
L109	1-410-473-11	s	INDUCTOR 18uH
L202	1-408-404-00	s	INDUCTOR 3.9uH
L313	1-408-404-00	s	INDUCTOR 3.9uH
L406	1-410-461-41	s	INDUCTOR 1.8uH
L507	1-408-429-00	s	INDUCTOR 470uH
L508	1-408-429-00	s	INDUCTOR 470uH
L602	1-410-468-11	s	INDUCTOR 6.8uH
L607	1-410-468-11	s	INDUCTOR 6.8uH
L608	1-410-471-11	s	INDUCTOR 12uH
L902	1-459-155-00	s	COIL 45uH
L903	1-459-155-00	s	COIL 45uH

NOTE: Please see pages 19-51 and 19-52 for the parts that are not listed in the part list.

(DM-56PC BOARD)

Ref. No. or Q'ty	Part No.	SP	Description
L904	1-459-155-00	s	COIL 45uH
L905	1-459-155-00	s	COIL 45uH
L906	1-459-155-00	s	COIL 45uH
LV1	1-408-634-00	s	INDUCTOR 10.7uH
Q1	8-729-101-25	s	TRANSISTOR 2SC1009A
Q2	8-729-101-25	s	TRANSISTOR 2SC1009A
Q3	8-729-101-25	s	TRANSISTOR 2SC1009A
Q4	8-729-101-25	s	TRANSISTOR 2SC1009A
Q5	8-729-101-25	s	TRANSISTOR 2SC1009A
Q6	8-729-101-25	s	TRANSISTOR 2SC1009A
Q7	8-729-900-53	s	TRANSISTOR DTC114EK
Q9	8-729-101-25	s	TRANSISTOR 2SC1009A
Q10	8-729-101-25	s	TRANSISTOR 2SC1009A
Q11	8-729-101-25	s	TRANSISTOR 2SC1009A
Q12	8-729-101-25	s	TRANSISTOR 2SC1009A
Q13	8-729-101-25	s	TRANSISTOR 2SC1009A
Q15	8-729-900-36	s	TRANSISTOR DTC124ES
Q16	8-729-101-25	s	TRANSISTOR 2SC1009A
Q18	8-729-102-07	s	TRANSISTOR 2SC2223-F13
Q19	8-729-202-38	s	TRANSISTOR 2SC3326N
Q20	8-729-122-63	s	TRANSISTOR 2SA1226
Q21	8-729-202-38	s	TRANSISTOR 2SC3326N
Q22	8-729-202-38	s	TRANSISTOR 2SC3326N
Q23	8-729-202-38	s	TRANSISTOR 2SC3326N
Q24	8-729-202-38	s	TRANSISTOR 2SC3326N
Q25	8-729-101-25	s	TRANSISTOR 2SC1009A
Q26	8-729-101-25	s	TRANSISTOR 2SC1009A
Q27	8-729-101-25	s	TRANSISTOR 2SC1009A
Q28	8-729-101-25	s	TRANSISTOR 2SC1009A
Q101	8-729-101-25	s	TRANSISTOR 2SC1009A
Q102	8-729-101-25	s	TRANSISTOR 2SC1009A
Q103	8-729-101-25	s	TRANSISTOR 2SC1009A
Q104	8-729-101-25	s	TRANSISTOR 2SC1009A
Q105	8-729-101-25	s	TRANSISTOR 2SC1009A
Q106	8-729-101-25	s	TRANSISTOR 2SC1009A
Q107	8-729-101-25	s	TRANSISTOR 2SC1009A
Q108	8-729-101-25	s	TRANSISTOR 2SC1009A
Q109	8-729-101-25	s	TRANSISTOR 2SC1009A
Q110	8-729-101-25	s	TRANSISTOR 2SC1009A
Q111	8-729-101-25	s	TRANSISTOR 2SC1009A
Q112	8-729-101-25	s	TRANSISTOR 2SC1009A
Q113	8-729-101-25	s	TRANSISTOR 2SC1009A
Q114	8-729-101-25	s	TRANSISTOR 2SC1009A
Q115	8-729-101-25	s	TRANSISTOR 2SC1009A
Q116	8-729-101-25	s	TRANSISTOR 2SC1009A
Q117	8-729-102-07	s	TRANSISTOR 2SC2223-F13
Q118	8-729-102-07	s	TRANSISTOR 2SC2223-F13
Q119	8-729-102-07	s	TRANSISTOR 2SC2223-F13
Q201	8-729-101-25	s	TRANSISTOR 2SC1009A
Q202	8-729-101-25	s	TRANSISTOR 2SC1009A
Q203	8-729-101-25	s	TRANSISTOR 2SC1009A
Q204	8-729-202-38	s	TRANSISTOR 2SC3326N
Q205	8-729-202-38	s	TRANSISTOR 2SC3326N
Q206	8-729-202-38	s	TRANSISTOR 2SC3326N
Q207	8-729-202-38	s	TRANSISTOR 2SC3326N

(DM-56PC BOARD)

Ref. No. or Q'ty	Part No.	SP	Description
Q208	8-729-101-25	s	TRANSISTOR 2SC1009A
Q301	8-729-122-63	s	TRANSISTOR 2SA1226
Q302	8-729-122-63	s	TRANSISTOR 2SA1226
Q303	8-729-102-07	s	TRANSISTOR 2SC2223-F13
Q304	8-729-101-25	s	TRANSISTOR 2SC1009A
Q305	8-729-101-25	s	TRANSISTOR 2SC1009A
Q306	8-729-101-25	s	TRANSISTOR 2SC1009A
Q307	8-729-101-25	s	TRANSISTOR 2SC1009A
Q308	8-729-101-25	s	TRANSISTOR 2SC1009A
Q309	8-729-101-25	s	TRANSISTOR 2SC1009A
Q310	8-729-101-25	s	TRANSISTOR 2SC1009A
Q311	8-729-101-25	s	TRANSISTOR 2SC1009A
Q312	8-729-101-25	s	TRANSISTOR 2SC1009A
Q313	8-729-202-38	s	TRANSISTOR 2SC3326N
Q314	8-729-102-07	s	TRANSISTOR 2SC2223-F13
Q315	8-729-101-25	s	TRANSISTOR 2SC1009A
Q316	8-729-101-25	s	TRANSISTOR 2SC1009A
Q317	8-729-101-25	s	TRANSISTOR 2SC1009A
Q318	8-729-101-25	s	TRANSISTOR 2SC1009A
Q403	8-729-101-25	s	TRANSISTOR 2SC1009A
Q404	8-729-101-25	s	TRANSISTOR 2SC1009A
Q409	8-729-101-25	s	TRANSISTOR 2SC1009A
Q410	8-729-101-25	s	TRANSISTOR 2SC1009A
Q411	8-729-101-25	s	TRANSISTOR 2SC1009A
Q412	8-729-101-25	s	TRANSISTOR 2SC1009A
Q413	8-729-101-25	s	TRANSISTOR 2SC1009A
Q414	8-729-101-25	s	TRANSISTOR 2SC1009A
Q415	8-729-101-25	s	TRANSISTOR 2SC1009A
Q416	8-729-101-25	s	TRANSISTOR 2SC1009A
Q417	8-729-900-36	s	TRANSISTOR DTC124ES
Q501	8-729-101-25	s	TRANSISTOR 2SC1009A
Q504	8-729-101-25	s	TRANSISTOR 2SC1009A
Q505	8-729-101-25	s	TRANSISTOR 2SC1009A
Q508	8-729-101-25	s	TRANSISTOR 2SC1009A
Q509	8-729-202-38	s	TRANSISTOR 2SC3326N
Q510	8-729-101-25	s	TRANSISTOR 2SC1009A
Q511	8-729-101-25	s	TRANSISTOR 2SC1009A
Q513	8-729-202-38	s	TRANSISTOR 2SC3326N
Q514	8-729-202-38	s	TRANSISTOR 2SC3326N
Q515	8-729-202-38	s	TRANSISTOR 2SC3326N
Q516	8-729-202-38	s	TRANSISTOR 2SC3326N
Q517	8-729-202-38	s	TRANSISTOR 2SC3326N
Q518	8-729-122-63	s	TRANSISTOR 2SA1226
Q519	8-729-101-25	s	TRANSISTOR 2SC1009A
Q520	8-729-101-25	s	TRANSISTOR 2SC1009A
Q521	8-729-101-25	s	TRANSISTOR 2SC1009A
Q522	8-729-101-25	s	TRANSISTOR 2SC1009A
Q524	8-729-101-25	s	TRANSISTOR 2SC1009A
Q525	8-729-101-25	s	TRANSISTOR 2SC1009A
Q526	8-729-101-25	s	TRANSISTOR 2SC1009A
Q601	8-729-101-25	s	TRANSISTOR 2SC1009A
Q602	8-729-101-25	s	TRANSISTOR 2SC1009A
Q603	8-729-101-25	s	TRANSISTOR 2SC1009A
Q604	8-729-202-38	s	TRANSISTOR 2SC3326N
Q605	8-729-202-38	s	TRANSISTOR 2SC3326N
Q606	8-729-202-38	s	TRANSISTOR 2SC3326N

NOTE: Please see pages 19-51 and 19-52 for the parts that are not listed in the part list.

(DM-56PC BOARD)

Ref. No. or Q'ty	Part No.	SP	Description
Q607	8-729-101-25	s	TRANSISTOR 2SC1009A
Q608	8-729-101-25	s	TRANSISTOR 2SC1009A
Q609	8-729-102-07	s	TRANSISTOR 2SC2223-F13
Q610	8-729-102-07	s	TRANSISTOR 2SC2223-F13
Q701	8-729-101-25	s	TRANSISTOR 2SC1009A
Q702	8-729-122-63	s	TRANSISTOR 2SA1226
Q703	8-729-122-63	s	TRANSISTOR 2SA1226
Q704	8-729-101-25	s	TRANSISTOR 2SC1009A
Q705	8-729-101-25	s	TRANSISTOR 2SC1009A
Q706	8-729-101-25	s	TRANSISTOR 2SC1009A
Q707	8-729-101-25	s	TRANSISTOR 2SC1009A
Q708	8-729-101-25	s	TRANSISTOR 2SC1009A
Q709	8-729-101-25	s	TRANSISTOR 2SC1009A
Q801	8-729-101-25	s	TRANSISTOR 2SC1009A
Q803	8-729-101-25	s	TRANSISTOR 2SC1009A
Q813	8-729-101-25	s	TRANSISTOR 2SC1009A
Q814	8-729-101-25	s	TRANSISTOR 2SC1009A
Q901	8-729-101-25	s	TRANSISTOR 2SC1009A
Q902	8-729-122-63	s	TRANSISTOR 2SA1226
R2	1-216-631-11	s	METAL, CHIP 150 0.5% 1/10W
R4	1-216-651-11	s	METAL, CHIP 1K 0.5% 1/10W
R5	1-216-651-11	s	METAL, CHIP 1K 0.5% 1/10W
R6	1-216-639-11	s	METAL, CHIP 330 0.5% 1/10W
R14	1-216-635-11	s	METAL, CHIP 220 0.5% 1/10W
R34	1-216-631-11	s	METAL, CHIP 150 0.5% 1/10W
R36	1-216-651-11	s	METAL, CHIP 1K 0.5% 1/10W
R37	1-216-651-11	s	METAL, CHIP 1K 0.5% 1/10W
R38	1-216-639-11	s	METAL, CHIP 330 0.5% 1/10W
R39	1-216-659-11	s	METAL, CHIP 2.2K 0.5% 1/10W
R40	1-216-659-11	s	METAL, CHIP 2.2K 0.5% 1/10W
R46	1-216-635-11	s	METAL, CHIP 220 0.5% 1/10W
R56	1-216-635-11	s	METAL, CHIP 220 0.5% 1/10W
R69	1-216-653-11	s	METAL, CHIP 1.2K 0.5% 1/10W
R70	1-216-643-11	s	METAL, CHIP 470 0.5% 1/10W
R71	1-216-646-11	s	METAL, CHIP 620 0.5% 1/10W
R73	1-216-635-11	s	METAL, CHIP 220 0.5% 1/10W
R74	1-216-635-11	s	METAL, CHIP 220 0.5% 1/10W
R90	1-216-687-11	s	METAL, CHIP 33K 0.5% 1/10W
R91	1-216-643-11	s	METAL, CHIP 470 0.5% 1/10W
R92	1-216-683-11	s	METAL, CHIP 22K 0.5% 1/10W
R93	1-216-642-11	s	METAL, CHIP 430 0.5% 1/10W
R94	1-216-627-11	s	METAL, CHIP 100 0.5% 1/10W
R95	1-216-651-11	s	METAL, CHIP 1K 0.5% 1/10W
R96	1-216-627-11	s	METAL, CHIP 100 0.5% 1/10W
R103	1-216-675-11	s	METAL, CHIP 10K 0.5% 1/10W
R104	1-216-675-11	s	METAL, CHIP 10K 0.5% 1/10W
R112	1-216-651-11	s	METAL, CHIP 1K 0.5% 1/10W
R114	1-216-687-11	s	METAL, CHIP 33K 0.5% 1/10W
R121	1-216-644-11	s	METAL, CHIP 510 0.5% 1/10W
R122	1-216-644-11	s	METAL, CHIP 510 0.5% 1/10W
R123	1-216-644-11	s	METAL, CHIP 510 0.5% 1/10W
R124	1-216-651-11	s	METAL, CHIP 1K 0.5% 1/10W
R125	1-216-651-11	s	METAL, CHIP 1K 0.5% 1/10W
R126	1-216-651-11	s	METAL, CHIP 1K 0.5% 1/10W
R127	1-216-651-11	s	METAL, CHIP 1K 0.5% 1/10W
R128	1-216-643-11	s	METAL, CHIP 470 0.5% 1/10W

(DM-56PC BOARD)

Ref. No. or Q'ty	Part No.	SP	Description
R129	1-216-651-11	s	METAL, CHIP 1K 0.5% 1/10W
R130	1-216-639-11	s	METAL, CHIP 330 0.5% 1/10W
R131	1-216-627-11	s	METAL, CHIP 100 0.5% 1/10W
R132	1-216-639-11	s	METAL, CHIP 330 0.5% 1/10W
R137	1-249-414-11	s	CARBON 560 5% 1/4W
R138	1-216-643-11	s	METAL, CHIP 470 0.5% 1/10W
R145	1-216-651-11	s	METAL, CHIP 1K 0.5% 1/10W
R156	1-215-493-00	s	METAL 1M 1% 1/6W
R202	1-216-647-11	s	METAL, CHIP 680 0.5% 1/10W
R204	1-216-657-11	s	METAL, CHIP 1.8K 0.5% 1/10W
R219	1-216-659-11	s	METAL, CHIP 2.2K 0.5% 1/10W
R225	1-216-690-11	s	METAL, CHIP 43K 0.5% 1/10W
R228	1-216-677-11	s	METAL, CHIP 12K 0.5% 1/10W
R229	1-216-669-11	s	METAL, CHIP 5.6K 0.5% 1/10W
R250	1-215-469-00	s	METAL 100K 1% 1/6W
R303	1-216-651-11	s	METAL, CHIP 1K 0.5% 1/10W
R304	1-216-651-11	s	METAL, CHIP 1K 0.5% 1/10W
R305	1-216-651-11	s	METAL, CHIP 1K 0.5% 1/10W
R306	1-216-651-11	s	METAL, CHIP 1K 0.5% 1/10W
R307	1-216-651-11	s	METAL, CHIP 1K 0.5% 1/10W
R308	1-216-651-11	s	METAL, CHIP 1K 0.5% 1/10W
R309	1-216-631-11	s	METAL, CHIP 150 0.5% 1/10W
R310	1-216-627-11	s	METAL, CHIP 100 0.5% 1/10W
R311	1-216-650-11	s	METAL, CHIP 910 0.5% 1/10W
R312	1-216-635-11	s	METAL, CHIP 220 0.5% 1/10W
R313	1-216-651-11	s	METAL, CHIP 1K 0.5% 1/10W
R314	1-216-651-11	s	METAL, CHIP 1K 0.5% 1/10W
R315	1-216-654-11	s	METAL, CHIP 1.3K 0.5% 1/10W
R316	1-216-619-11	s	METAL, CHIP 47 0.5% 1/10W
R317	1-216-619-11	s	METAL, CHIP 47 0.5% 1/10W
R318	1-216-627-11	s	METAL, CHIP 100 0.5% 1/10W
R319	1-216-627-11	s	METAL, CHIP 100 0.5% 1/10W
R320	1-216-651-11	s	METAL, CHIP 1K 0.5% 1/10W
R321	1-216-631-11	s	METAL, CHIP 150 0.5% 1/10W
R322	1-216-644-11	s	METAL, CHIP 510 0.5% 1/10W
R323	1-218-178-11	s	METAL, CHIP 1002 0.1% 1/16W
R324	1-218-176-11	s	METAL, CHIP 289 0.1% 1/16W
R327	1-216-651-11	s	METAL, CHIP 1K 0.5% 1/10W
R332	1-216-638-11	s	METAL, CHIP 300 0.5% 1/10W
R334	1-216-638-11	s	METAL, CHIP 300 0.5% 1/10W
R337	1-216-648-11	s	METAL, CHIP 750 0.5% 1/10W
R338	1-216-629-11	s	METAL, CHIP 120 0.5% 1/10W
R339	1-216-659-11	s	METAL, CHIP 2.2K 0.5% 1/10W
R340	1-216-643-11	s	METAL, CHIP 470 0.5% 1/10W
R342	1-216-643-11	s	METAL, CHIP 470 0.5% 1/10W
R343	1-216-659-11	s	METAL, CHIP 2.2K 0.5% 1/10W
R344	1-216-643-11	s	METAL, CHIP 470 0.5% 1/10W
R346	1-216-643-11	s	METAL, CHIP 470 0.5% 1/10W
R353	1-216-649-11	s	METAL, CHIP 820 0.5% 1/10W
R357	1-216-655-11	s	METAL, CHIP 1.5K 0.5% 1/10W
R359	1-216-627-11	s	METAL, CHIP 100 0.5% 1/10W
R365	1-216-643-11	s	METAL, CHIP 470 0.5% 1/10W
R366	1-216-655-11	s	METAL, CHIP 1.5K 0.5% 1/10W
R368	1-216-650-11	s	METAL, CHIP 910 0.5% 1/10W
R370	1-216-650-11	s	METAL, CHIP 910 0.5% 1/10W
R376	1-216-627-11	s	METAL, CHIP 100 0.5% 1/10W

NOTE: Please see pages 19-51 and 19-52 for the parts that are not listed in the part list.

(DM-56PC BOARD)

Ref. No. or Q'ty	Part No.	SP	Description
R377	1-216-675-11	s	METAL, CHIP 10K 0.5% 1/10W
R380	1-215-412-00	s	METAL 430 1% 1/6W
R390	1-215-421-00	s	METAL 1K 1% 1/6W
R401	1-216-679-11	s	METAL, CHIP 15K 0.5% 1/10W
R402	1-216-651-11	s	METAL, CHIP 1K 0.5% 1/10W
R403	1-216-650-11	s	METAL, CHIP 910 0.5% 1/10W
R420	1-216-651-11	s	METAL, CHIP 1K 0.5% 1/10W
R421	1-216-647-11	s	METAL, CHIP 680 0.5% 1/10W
R422	1-216-650-11	s	METAL, CHIP 910 0.5% 1/10W
R424	1-216-642-11	s	METAL, CHIP 430 0.5% 1/10W
R426	1-216-632-11	s	METAL, CHIP 160 0.5% 1/10W
R430	1-216-658-11	s	METAL, CHIP 2K 0.5% 1/10W
R432	1-216-637-11	s	METAL, CHIP 270 0.5% 1/10W
R434	1-216-691-11	s	METAL, CHIP 47K 0.5% 1/10W
R435	1-216-691-11	s	METAL, CHIP 47K 0.5% 1/10W
R441	1-216-624-11	s	METAL, CHIP 75 0.5% 1/10W
R448	1-216-638-11	s	METAL, CHIP 300 0.5% 1/10W
R449	1-216-624-11	s	METAL, CHIP 75 0.5% 1/10W
R450	1-216-623-11	s	METAL, CHIP 68 0.5% 1/10W
R452	1-216-651-11	s	METAL, CHIP 1K 0.5% 1/10W
R505	1-216-635-11	s	METAL, CHIP 220 0.5% 1/10W
R526	1-216-635-11	s	METAL, CHIP 220 0.5% 1/10W
R541	1-216-651-11	s	METAL, CHIP 1K 0.5% 1/10W
R544	1-216-651-11	s	METAL, CHIP 1K 0.5% 1/10W
R546	1-216-635-11	s	METAL, CHIP 220 0.5% 1/10W
R565	1-216-651-11	s	METAL, CHIP 1K 0.5% 1/10W
R566	1-216-643-11	s	METAL, CHIP 470 0.5% 1/10W
R567	1-216-651-11	s	METAL, CHIP 1K 0.5% 1/10W
R568	1-216-635-11	s	METAL, CHIP 220 0.5% 1/10W
R569	1-216-635-11	s	METAL, CHIP 220 0.5% 1/10W
R582	1-216-675-11	s	METAL, CHIP 10K 0.5% 1/10W
R583	1-216-675-11	s	METAL, CHIP 10K 0.5% 1/10W
R591	1-216-651-11	s	METAL, CHIP 1K 0.5% 1/10W
R593	1-216-687-11	s	METAL, CHIP 33K 0.5% 1/10W
R598	1-215-403-00	s	METAL 180 1% 1/6W
R599	1-215-403-00	s	METAL 180 1% 1/6W
R602	1-216-651-11	s	METAL, CHIP 1K 0.5% 1/10W
R606	1-216-643-11	s	METAL, CHIP 470 0.5% 1/10W
R618	1-216-659-11	s	METAL, CHIP 2.2K 0.5% 1/10W
R621	1-216-683-11	s	METAL, CHIP 22K 0.5% 1/10W
R622	1-216-690-11	s	METAL, CHIP 43K 0.5% 1/10W
R626	1-216-669-11	s	METAL, CHIP 5.6K 0.5% 1/10W
R635	1-216-643-11	s	METAL, CHIP 470 0.5% 1/10W
R636	1-216-646-11	s	METAL, CHIP 620 0.5% 1/10W
R641	1-216-650-11	s	METAL, CHIP 910 0.5% 1/10W
R642	1-216-651-11	s	METAL, CHIP 1K 0.5% 1/10W
R643	1-216-683-11	s	METAL, CHIP 22K 0.5% 1/10W
R644	1-216-646-11	s	METAL, CHIP 620 0.5% 1/10W
R645	1-216-644-11	s	METAL, CHIP 510 0.5% 1/10W
R646	1-216-635-11	s	METAL, CHIP 220 0.5% 1/10W
R647	1-216-648-11	s	METAL, CHIP 750 0.5% 1/10W
R690	1-215-493-00	s	METAL 1M 1% 1/6W
R691	1-215-419-00	s	METAL 820 1% 1/6W
R692	1-215-419-00	s	METAL 820 1% 1/6W
R693	1-215-403-00	s	METAL 180 1% 1/6W
R694	1-215-403-00	s	METAL 180 1% 1/6W

(DM-56PC BOARD)

Ref. No. or Q'ty	Part No.	SP	Description
R695	1-215-418-00	s	METAL 750 1% 1/6W
R702	1-216-651-11	s	METAL, CHIP 1K 0.5% 1/10W
R703	1-216-651-11	s	METAL, CHIP 1K 0.5% 1/10W
R704	1-216-651-11	s	METAL, CHIP 1K 0.5% 1/10W
R705	1-216-651-11	s	METAL, CHIP 1K 0.5% 1/10W
R706	1-216-651-11	s	METAL, CHIP 1K 0.5% 1/10W
R707	1-216-651-11	s	METAL, CHIP 1K 0.5% 1/10W
R708	1-216-631-11	s	METAL, CHIP 150 0.5% 1/10W
R709	1-216-627-11	s	METAL, CHIP 100 0.5% 1/10W
R710	1-216-650-11	s	METAL, CHIP 910 0.5% 1/10W
R711	1-216-635-11	s	METAL, CHIP 220 0.5% 1/10W
R712	1-216-649-11	s	METAL, CHIP 820 0.5% 1/10W
R713	1-216-619-11	s	METAL, CHIP 47 0.5% 1/10W
R714	1-216-619-11	s	METAL, CHIP 47 0.5% 1/10W
R715	1-216-627-11	s	METAL, CHIP 100 0.5% 1/10W
R716	1-216-627-11	s	METAL, CHIP 100 0.5% 1/10W
R717	1-216-639-11	s	METAL, CHIP 330 0.5% 1/10W
R718	1-216-627-11	s	METAL, CHIP 100 0.5% 1/10W
R719	1-216-649-11	s	METAL, CHIP 820 0.5% 1/10W
R720	1-218-177-11	s	METAL, CHIP 1001 0.1% 1/16W
R721	1-218-175-11	s	METAL, CHIP 267 0.1% 1/16W
R722	1-216-651-11	s	METAL, CHIP 1K 0.5% 1/10W
R723	1-216-654-11	s	METAL, CHIP 1.3K 0.5% 1/10W
R729	1-216-647-11	s	METAL, CHIP 680 0.5% 1/10W
R734	1-216-635-11	s	METAL, CHIP 220 0.5% 1/10W
R738	1-216-643-11	s	METAL, CHIP 470 0.5% 1/10W
R739	1-216-673-11	s	METAL, CHIP 8.2K 0.5% 1/10W
R740	1-216-679-11	s	METAL, CHIP 15K 0.5% 1/10W
R741	1-216-647-11	s	METAL, CHIP 680 0.5% 1/10W
R742	1-216-638-11	s	METAL, CHIP 300 0.5% 1/10W
R743	1-216-638-11	s	METAL, CHIP 300 0.5% 1/10W
R744	1-216-638-11	s	METAL, CHIP 300 0.5% 1/10W
R745	1-216-638-11	s	METAL, CHIP 300 0.5% 1/10W
R748	1-216-629-11	s	METAL, CHIP 120 0.5% 1/10W
R749	1-216-667-11	s	METAL, CHIP 4.7K 0.5% 1/10W
R750	1-216-659-11	s	METAL, CHIP 2.2K 0.5% 1/10W
R753	1-215-412-00	s	METAL 430 1% 1/6W
R760	1-249-393-11	s	CARBON 10 5% 1/4W
R761	1-249-393-11	s	CARBON 10 5% 1/4W
R803	1-216-650-11	s	METAL, CHIP 910 0.5% 1/10W
R804	1-216-651-11	s	METAL, CHIP 1K 0.5% 1/10W
R824	1-216-624-11	s	METAL, CHIP 75 0.5% 1/10W
R827	1-216-615-11	s	METAL, CHIP 33 0.5% 1/10W
R828	1-216-675-11	s	METAL, CHIP 10K 0.5% 1/10W
R835	1-216-624-11	s	METAL, CHIP 75 0.5% 1/10W
R836	1-216-623-11	s	METAL, CHIP 68 0.5% 1/10W
RB901	1-231-411-00	s	RESISTOR BLOCK 100Kx8
RV1	1-228-458-00	s	RES, ADJ, METAL 5K
RV2	1-228-457-00	s	RES, ADJ, METAL 2K
RV3	1-228-459-00	s	RES, ADJ, METAL 10K
RV4	1-228-456-00	s	RES, ADJ, METAL 1K
RV6	1-228-458-00	s	RES, ADJ, METAL 5K
RV7	1-228-457-00	s	RES, ADJ, METAL 2K
RV8	1-228-459-00	s	RES, ADJ, METAL 10K
RV15	1-228-456-00	s	RES, ADJ, METAL 1K

NOTE: Please see pages 19-51 and 19-52 for the parts that are not listed in the part list.

(DM-56PC BOARD)

Ref. No. or Q'ty	Part No.	SP	Description
RV101	1-228-458-00	s	RES, ADJ, METAL 5K
RV102	1-237-515-21	s	RES, ADJ, METAL 1K
RV103	1-237-515-21	s	RES, ADJ, METAL 1K
RV104	1-228-459-00	s	RES, ADJ, METAL 10K
RV105	1-228-456-00	s	RES, ADJ, METAL 1K
RV106	1-237-515-21	s	RES, ADJ, METAL 1K
RV107	1-237-515-21	s	RES, ADJ, METAL 1K
RV201	1-228-457-00	s	RES, ADJ, METAL 2K
RV202	1-228-454-00	s	RES, ADJ, CERMET 200
RV203	1-228-459-00	s	RES, ADJ, METAL 10K
RV204	1-228-462-00	s	RES, ADJ, METAL 100K
RV205	1-228-462-00	s	RES, ADJ, METAL 100K
RV206	1-228-459-00	s	RES, ADJ, METAL 10K
RV207	1-228-459-00	s	RES, ADJ, METAL 10K
RV301	1-228-459-00	s	RES, ADJ, METAL 10K
RV302	1-228-454-00	s	RES, ADJ, CERMET 200
RV303	1-228-456-00	s	RES, ADJ, METAL 1K
RV304	1-228-455-00	s	RES, ADJ, METAL 500
RV305	1-237-518-21	s	RES, ADJ, METAL 10K
RV306	1-228-458-00	s	RES, ADJ, METAL 5K
RV307	1-228-458-00	s	RES, ADJ, METAL 5K
RV308	1-228-456-00	s	RES, ADJ, METAL 1K
RV401	1-228-458-00	s	RES, ADJ, METAL 5K
RV405	1-228-462-00	s	RES, ADJ, METAL 100K
RV501	1-228-457-00	s	RES, ADJ, METAL 2K
RV502	1-228-459-00	s	RES, ADJ, METAL 10K
RV503	1-228-456-00	s	RES, ADJ, METAL 1K
RV504	1-228-457-00	s	RES, ADJ, METAL 2K
RV505	1-228-459-00	s	RES, ADJ, METAL 10K
RV512	1-228-457-00	s	RES, ADJ, METAL 2K
RV601	1-228-458-00	s	RES, ADJ, METAL 5K
RV602	1-228-455-00	s	RES, ADJ, METAL 500
RV603	1-228-459-00	s	RES, ADJ, METAL 10K
RV604	1-228-462-00	s	RES, ADJ, METAL 100K
RV605	1-228-460-00	s	RES, ADJ, METAL 20K
RV606	1-228-459-00	s	RES, ADJ, METAL 10K
RV701	1-228-460-00	s	RES, ADJ, METAL 20K
RV702	1-228-455-00	s	RES, ADJ, METAL 500
RV703	1-237-516-21	s	RES, ADJ, METAL 2K
RV704	1-228-456-00	s	RES, ADJ, METAL 1K
RV802	1-228-456-00	s	RES, ADJ, METAL 1K
S402	1-552-509-00	s	SWITCH, DIP 1-CKT
S403	1-552-509-00	s	SWITCH, DIP 1-CKT
S802	1-552-509-00	s	SWITCH, DIP 1-CKT
S901	1-552-509-00	s	SWITCH, DIP 1-CKT
SP101	1-566-388-11	s	CONNECTOR, 8P, MALE
SP102	1-566-388-11	s	CONNECTOR, 8P, MALE
SP301	1-566-388-11	s	CONNECTOR, 8P, MALE
SP402	1-566-388-11	s	CONNECTOR, 8P, MALE
SP501	1-566-388-11	s	CONNECTOR, 8P, MALE
SP502	1-566-388-11	s	CONNECTOR, 8P, MALE
SP701	1-566-388-11	s	CONNECTOR, 8P, MALE
SP801	1-566-388-11	s	CONNECTOR, 8P, MALE
SS101	1-565-413-11	o	PLUG, SHORTING
SS301	1-565-413-11	o	PLUG, SHORTING
Q201	8-729-119-78	s	TRANSISTOR 2SC2785-HFE

NOTE: Please see pages 19-51 and 19-52 for the parts that are not listed in the part list.

(DM-56PC BOARD)

Ref. No. or Q'ty	Part No.	SP	Description
SS402	1-565-413-11	o	PLUG, SHORTING
SS501	1-565-413-11	o	PLUG, SHORTING
SS701	1-565-413-11	o	PLUG, SHORTING
SS801	1-565-413-11	o	PLUG, SHORTING
TH301	1-800-202-XX	s	THERMISTOR S-10K
TH402	1-800-200-00	s	THERMISTOR S-3K
TH701	1-800-200-00	s	THERMISTOR S-3K

DP-72 BOARD

Ref. No. or Q'ty	Part No.	SP	Description
1pc	1-622-591-11	o	PRINTED CIRCUIT BOARD, DP-72
D1	8-719-820-27	s	LED TLY-256, YEL
D2	8-719-820-27	s	LED TLY-256, YEL

DP-73 BOARD

Ref. No. or Q'ty	Part No.	SP	Description
This board is included in DP-74 board.			
1pc	1-464-821-11	s	CONVERTER, DC-DC
C101	1-124-343-00	s	ELECT 2200uF 20% 16V
C102	1-130-491-00	s	MYLAR 0.047uF 5% 50V
C104	1-130-491-00	s	MYLAR 0.047uF 5% 50V
C105	1-124-910-11	s	ELECT 47uF 20% 50V
C106	1-130-491-00	s	MYLAR 0.047uF 5% 50V
C107	1-124-910-11	s	ELECT 47uF 20% 50V
C108	1-130-491-00	s	MYLAR 0.047uF 5% 50V
CN521	1-506-493-11	s	CONNECTOR, 14P, MALE
CN522	1-506-482-11	s	CONNECTOR, 3P, MALE
L101	1-459-155-00	s	COIL 45uH
L102	1-459-155-00	s	COIL 45uH
R101	1-207-620-00	s	WIREWOUND 1 10% 3W
R102	1-532-984-11	s	LINK, IC 2A
S101	1-571-258-11	s	SWITCH, SLIDE
S102	1-571-258-11	s	SWITCH, SLIDE

DP-74 BOARD

Ref. No. or Q'ty	Part No.	SP	Description
This board includes DP-73 board. See "DP-73 BOARD" for details of it.			
C5	1-124-225-00	s	ELECT 100uF 20% 6.3V
C6	1-124-248-00	s	ELECT 22uF 20% 35V
C13	1-126-160-11	s	ELECT 1uF 20% 50V
C14	1-126-154-11	s	ELECT 47uF 20% 6.3V
D1	8-719-109-66	s	DIODE RD3.3ES-B2
D2	8-719-400-18	s	DIODE MA152WK
D3	8-719-109-72	s	DIODE RD3.9ES-B2
D4	8-719-400-18	s	DIODE MA152WK
D5	8-719-400-18	s	DIODE MA152WK
E1	3-657-235-00	s	POINT, TEST
IC1	8-759-942-62	s	IC MB88515B-280M
IC2	8-759-904-71	s	IC MSL917RS
L103	1-408-417-00	s	INDUCTOR 47uH
Q1	8-729-901-06	s	TRANSISTOR DTA144EK
Q2	8-729-901-06	s	TRANSISTOR DTA144EK
Q3	8-729-901-06	s	TRANSISTOR DTA144EK
Q4	8-729-271-22	s	TRANSISTOR 2SC2712-G
Q5	8-729-271-22	s	TRANSISTOR 2SC2712-G
R51	1-249-426-11	s	CARBON 5.6K 5% 1/4W
R52	1-249-403-11	s	CARBON 68 5% 1/4W
RV1	1-228-471-00	s	RES, ADJ, METAL 1K
TP1	3-657-235-00	s	POINT, TEST
X1	1-567-143-00	s	RESONATOR, CERAMIC 6.00MHz

DP-121 BOARD

Ref. No. or Q'ty	Part No.	SP	Description
CN1	1-506-483-21	o	CONNECTOR, 4P, MALE
D1	8-719-820-28	s	LED TLG-256, GRN
D2	8-719-820-28	s	LED TLG-256, GRN
D3	8-719-939-39	s	LED GL5HD8, RED
D4	8-719-939-39	s	LED GL5HD8, RED
D5	8-719-820-28	s	LED TLG-256, GRN
D6	8-719-820-28	s	LED TLG-256, GRN
R1	1-249-410-11	s	CARBON 270 5% 1/4W
R2	1-249-413-11	s	CARBON 470 5% 1/4W
R3	1-249-410-11	s	CARBON 270 5% 1/4W

NOTE: Please see pages 19-51 and 19-52 for the parts that are not listed in the part list.

DP-136 BOARD

Ref. No. or Q'ty	Part No.	SP	Description
1pc	1-634-413-11	o	PRINTED CIRCUIT BOARD, DP-136
CN3	1-535-699-11	o	CABLE, JUMPER 23P
D60	8-719-942-19	s	LED LB402VK
D61	8-719-942-19	s	LED LB402VK
D62	8-719-942-19	s	LED LB402VK
D63	8-719-942-19	s	LED LB402VK
S29	1-552-539-00	s	SWITCH, TACTILE
S30	1-552-539-00	s	SWITCH, TACTILE
S31	1-552-539-00	s	SWITCH, TACTILE

DR-56 BOARD

Ref. No. or Q'ty	Part No.	SP	Description
1pc	1-622-561-11	o	PRINTED CIRCUIT BOARD, DR-56
CN841	1-506-477-11	s	CONNECTOR, 12P, MALE
CN842	1-506-469-11	s	CONNECTOR, 4P, MALE
CN843	1-506-473-11	s	CONNECTOR, 8P, MALE
Q1	8-729-376-84	s	TRANSISTOR 2SA768-G
Q2	8-729-402-12	s	TRANSISTOR 2SD1276A
Q3	8-729-402-12	s	TRANSISTOR 2SD1276A
Q4	8-729-402-12	s	TRANSISTOR 2SD1276A
Q5	8-729-402-12	s	TRANSISTOR 2SD1276A
Q6	8-729-402-12	s	TRANSISTOR 2SD1276A
Q7	8-729-402-12	s	TRANSISTOR 2SD1276A
Q8	8-729-376-84	s	TRANSISTOR 2SA768-G
Q9	8-729-102-57	s	TRANSISTOR 2SC3012
Q10	8-729-102-47	s	TRANSISTOR 2SA1141-Q
Q11	8-729-102-47	s	TRANSISTOR 2SA1141-Q
Q12	8-729-102-57	s	TRANSISTOR 2SC3012

DT-13PC BOARD

Ref. No. or Q'ty	Part No.	SP	Description
1pc	A-6715-359-A	s	MOUNTED CIRCUIT BOARD, DT-13PC
When this board is used in BVW-85P, perform the modificatio Please refer to Sec. 2-11-3.			
2pcs	7-622-207-05	s	N 2.6, TYPE 2
2pcs	7-628-254-30	s	SCREW +PS 2.6X10
C61	1-130-483-00	s	MYLAR 0.01uF 5% 50V
C62	1-130-483-00	s	MYLAR 0.01uF 5% 50V
C63	1-130-475-00	s	MYLAR 0.0022uF 5% 50V
C64	1-130-483-00	s	MYLAR 0.01uF 5% 50V
C65	1-130-475-00	s	MYLAR 0.0022uF 5% 50V
C203	1-130-483-00	s	MYLAR 0.01uF 5% 50V
C204	1-130-493-00	s	MYLAR 0.068uF 5% 50V
C217	1-130-471-00	s	MYLAR 0.001uF 5% 50V
C218	1-130-483-00	s	MYLAR 0.01uF 5% 50V
C219	1-107-210-00	s	MICA 22PF 5% 500V
C220	1-107-210-00	s	MICA 22PF 5% 500V
C223	1-130-471-00	s	MYLAR 0.001uF 5% 50V
C224	1-130-471-00	s	MYLAR 0.001uF 5% 50V
CN1	1-506-748-11	s	CONNECTOR, DIN 96P, MALE
D10	8-719-911-19	s	DIODE 1SS119
D12	8-719-911-19	s	DIODE 1SS119
D13	8-719-911-19	s	DIODE 1SS119
D201	8-719-911-19	s	DIODE 1SS119
D202	8-719-101-97	s	DIODE 1SS97-1
D203	8-719-911-19	s	DIODE 1SS119
D204	8-719-911-19	s	DIODE 1SS119
D205	8-719-911-19	s	DIODE 1SS119
D302	8-719-911-19	s	DIODE 1SS119
D303	8-719-911-19	s	DIODE 1SS119
D305	8-719-800-60	s	LED TLR214, RED
D306	8-719-101-97	s	DIODE 1SS97-1
IC1	8-759-945-58	s	IC UPC4558C
IC3	8-759-926-65	s	IC SN74HC368NS
IC4	8-759-945-58	s	IC UPC4558C
IC5	8-759-981-64	s	IC LM2903DQ
IC6	8-759-009-04	s	IC MC14050BF
IC7	8-759-009-11	s	IC MC14070BF
IC9	8-759-008-74	s	IC MC14001BF
IC10	8-759-009-19	s	IC MC14081BF
IC11	8-759-009-51	s	IC MC14538BF
IC15	8-759-914-74	s	IC MSM5204ARS
IC19	8-759-204-71	s	IC TC40H163F
IC20	8-759-208-86	s	IC TMPZ84C011AF-6
IC21	8-759-738-42	s	IC 2764-BVW85PV1.00DT
IC22	8-752-323-64	s	IC CXK5816M-12L
IC23	8-759-204-60	s	IC TC40H139F
IC24	8-759-201-63	s	IC TC40H032F
IC26	8-759-996-53	s	IC TMPZ84C30AP-6
IC27	8-759-925-90	s	IC SN74HC74NS
IC28	8-759-938-68	s	IC CXD1095Q
IC35	8-759-910-83	s	IC TL072ACP
IC37	8-759-009-07	s	IC MC14053BF
IC38	8-759-009-07	s	IC MC14053BF
IC40	8-759-945-58	s	IC UPC4558C

NOTE: Please see pages 19-51 and 19-52 for the parts that are not listed in the part list.

(DT-13PC BOARD)

Ref. No. or Q'ty	Part No.	SP	Description
IC42	8-759-205-78	s	IC TC504013BF
Q201	8-729-119-78	s	TRANSISTOR 2SC2785-HFE
Q306	8-729-119-78	s	TRANSISTOR 2SC2785-HFE
R151	1-247-895-00	s	CARBON 470K 5% 1/4W
R214	1-215-473-00	s	METAL 150K 1% 1/6W
R215	1-215-473-00	s	METAL 150K 1% 1/6W
R216	1-215-476-00	s	METAL 200K 1% 1/6W
R221	1-215-473-00	s	METAL 150K 1% 1/6W
R222	1-215-473-00	s	METAL 150K 1% 1/6W
R223	1-215-476-00	s	METAL 200K 1% 1/6W
R229	1-249-410-11	s	CARBON 270 5% 1/4W
R239	1-249-430-11	s	CARBON 12K 5% 1/4W
R280	1-215-478-00	s	METAL 240K 1% 1/6W
R281	1-215-486-00	s	METAL 510K 1% 1/6W
R283	1-215-478-00	s	METAL 240K 1% 1/6W
R284	1-215-486-00	s	METAL 510K 1% 1/6W
RB201	1-231-387-00	s	COMPOSITION CIRCUIT BLOCK
RB202	1-231-387-00	s	COMPOSITION CIRCUIT BLOCK
RB203	1-232-029-11	s	COMPOSITION CIRCUIT BLOCK
RB204	1-232-235-11	s	COMPOSITION CIRCUIT BLOCK
RB301	1-231-387-00	s	COMPOSITION CIRCUIT BLOCK
RB302	1-231-387-00	s	COMPOSITION CIRCUIT BLOCK
RV205	1-237-518-21	s	RES, ADJ, METAL 10K
RV206	1-237-518-21	s	RES, ADJ, METAL 10K
S201	1-553-572-00	s	SWITCH, DIP 4-CKT
S202	1-552-539-00	s	SWITCH, TACTILE
X201	1-567-865-11	s	CRYSTAL, 12.00MHz

DT-14PC BOARD

Ref. No. or Q'ty	Part No.	SP	Description
1pc	A-6715-444-A	o	MOUNTED CIRCUIT BOARD, DT-14PC
This board includes DUS-282 board. See "DUS-282 BOARD" for details of it.			
1pc	1-566-085-11	s	CONNECTOR, 20P, MALE
2pcs	7-622-207-05	s	N 2.6, TYPE 2
2pcs	7-628-254-30	s	SCREW +PS 2.6X10
C1	1-130-471-00	s	MYLAR 0.001uF 5% 50V
C2	1-107-085-00	s	MICA 100PF 5% 50V
C3	1-130-471-00	s	MYLAR 0.001uF 5% 50V
C4	1-130-471-00	s	MYLAR 0.001uF 5% 50V
C5	1-130-479-00	s	MYLAR 0.0047uF 5% 50V
C6	1-130-471-00	s	MYLAR 0.001uF 5% 50V
C7	1-130-475-00	s	MYLAR 0.0022uF 5% 50V
C8	1-130-471-00	s	MYLAR 0.001uF 5% 50V
C9	1-130-483-00	s	MYLAR 0.01uF 5% 50V
C10	1-162-710-11	s	CERAMIC 100PF 1% 50V
C11	1-130-495-00	s	MYLAR 0.1uF 5% 50V
C12	1-130-483-00	s	MYLAR 0.01uF 5% 50V
C13	1-130-497-00	s	MYLAR 0.15uF 5% 50V
C14	1-130-483-00	s	MYLAR 0.01uF 5% 50V
C15	1-130-479-00	s	MYLAR 0.0047uF 5% 50V
C16	1-130-485-00	s	MYLAR 0.015uF 5% 50V
C17	1-130-483-00	s	MYLAR 0.01uF 5% 50V
C19	1-162-722-11	s	CERAMIC 330PF 1% 50V
C20	1-130-487-00	s	MYLAR 0.022uF 5% 50V
C21	1-130-483-00	s	MYLAR 0.01uF 5% 50V
C22	1-130-483-00	s	MYLAR 0.01uF 5% 50V
C23	1-130-483-00	s	MYLAR 0.01uF 5% 50V
C24	1-162-710-11	s	CERAMIC 100PF 1% 50V
C25	1-130-483-00	s	MYLAR 0.01uF 5% 50V
C26	1-130-495-00	s	MYLAR 0.1uF 5% 50V
C27	1-130-497-00	s	MYLAR 0.15uF 5% 50V
C28	1-130-483-00	s	MYLAR 0.01uF 5% 50V
C29	1-130-479-00	s	MYLAR 0.0047uF 5% 50V
C30	1-130-485-00	s	MYLAR 0.015uF 5% 50V
C31	1-130-489-00	s	MYLAR 0.033uF 5% 50V
C32	1-130-491-00	s	MYLAR 0.047uF 5% 50V
C33	1-130-482-00	s	MYLAR 0.0082uF 5% 50V
C34	1-130-495-00	s	MYLAR 0.1uF 5% 50V
C35	1-130-489-00	s	MYLAR 0.033uF 5% 50V
C36	1-130-491-00	s	MYLAR 0.047uF 5% 50V
C37	1-130-482-00	s	MYLAR 0.0082uF 5% 50V
C38	1-130-478-00	s	MYLAR 0.0039uF 5% 50V
C39	1-130-478-00	s	MYLAR 0.0039uF 5% 50V
C40	1-130-483-00	s	MYLAR 0.01uF 5% 50V
C41	1-130-483-00	s	MYLAR 0.01uF 5% 50V
C42	1-130-483-00	s	MYLAR 0.01uF 5% 50V
C43	1-130-483-00	s	MYLAR 0.01uF 5% 50V
C45	1-130-495-00	s	MYLAR 0.1uF 5% 50V
C49	1-130-478-00	s	MYLAR 0.0039uF 5% 50V
C50	1-130-478-00	s	MYLAR 0.0039uF 5% 50V
C51	1-130-483-00	s	MYLAR 0.01uF 5% 50V
C52	1-130-483-00	s	MYLAR 0.01uF 5% 50V
C53	1-130-483-00	s	MYLAR 0.01uF 5% 50V
C54	1-130-483-00	s	MYLAR 0.01uF 5% 50V
C58	1-130-495-00	s	MYLAR 0.1uF 5% 50V

NOTE: Please see pages 19-51 and 19-52 for the parts that are not listed in the part list.

(DT-14PC BOARD)

Ref. No. or Q'ty	Part No.	SP	Description
C59	1-130-495-00	s	MYLAR 0.1uF 5% 50V
C76	1-130-487-00	s	MYLAR 0.022uF 5% 50V
C77	1-130-487-00	s	MYLAR 0.022uF 5% 50V
C205	1-130-475-00	s	MYLAR 0.0022uF 5% 50V
C206	1-130-483-00	s	MYLAR 0.01uF 5% 50V
C207	1-161-051-00	s	CERAMIC 0.01uF 10% 50V
C301	1-130-483-00	s	MYLAR 0.01uF 5% 50V
C302	1-130-483-00	s	MYLAR 0.01uF 5% 50V
C306	1-107-204-00	s	MICA 12PF 5% 500V
C309	1-107-076-00	s	MICA 43PF 5% 50V
C312	1-109-627-00	s	MICA 150PF 2% 500V
C313	1-162-714-11	s	CERAMIC 150PF 1% 50V
C314	1-124-234-00	s	ELECT 22uF 20% 16V
C315	1-131-345-00	s	TANTALUM 0.47uF 10% 35V
C317	1-130-483-00	s	MYLAR 0.01uF 5% 50V
C319	1-130-483-00	s	MYLAR 0.01uF 5% 50V
C320	1-130-495-00	s	MYLAR 0.1uF 5% 50V
C321	1-130-471-00	s	MYLAR 0.001uF 5% 50V
C322	1-130-480-00	s	MYLAR 0.0056uF 5% 50V
C323	1-130-471-00	s	MYLAR 0.001uF 5% 50V
C324	1-130-479-00	s	MYLAR 0.0047uF 5% 50V
C325	1-130-478-00	s	MYLAR 0.0039uF 5% 50V
C329	1-130-483-00	s	MYLAR 0.01uF 5% 50V
C330	1-130-471-00	s	MYLAR 0.001uF 5% 50V
C331	1-130-473-00	s	MYLAR 0.0015uF 5% 50V
C338	1-130-487-00	s	MYLAR 0.022uF 5% 50V
C339	1-161-051-00	s	CERAMIC 0.01uF 10% 50V
CN1	1-506-748-11	s	CONNECTOR, DIN 96P, MALE
D1	8-719-911-19	s	DIODE 1SS119
D2	8-719-101-97	s	DIODE 1SS97-1
D3	8-719-911-19	s	DIODE 1SS119
D4	8-719-109-72	s	DIODE RD3.9ES-B2
D5	8-719-109-72	s	DIODE RD3.9ES-B2
D6	8-719-911-19	s	DIODE 1SS119
D7	8-719-911-19	s	DIODE 1SS119
D8	8-719-911-19	s	DIODE 1SS119
D9	8-719-911-19	s	DIODE 1SS119
D14	8-719-911-19	s	DIODE 1SS119
D15	8-719-911-19	s	DIODE 1SS119
D16	8-719-911-19	s	DIODE 1SS119
D17	8-719-911-19	s	DIODE 1SS119
D301	8-719-911-19	s	DIODE 1SS119
D304	8-719-911-19	s	DIODE 1SS119
IC1	8-759-009-51	s	IC MC14538BF
IC2	8-759-205-78	s	IC TC504013BF
IC3	8-759-945-58	s	IC UPC4558C
IC4	8-759-945-58	s	IC UPC4558C
IC5	8-759-945-58	s	IC UPC4558C
IC6	8-759-945-58	s	IC UPC4558C
IC7	8-759-945-58	s	IC UPC4558C
IC8	8-759-945-58	s	IC UPC4558C
IC9	8-759-009-51	s	IC MC14538BF
IC10	8-759-009-51	s	IC MC14538BF
IC11	8-759-945-58	s	IC UPC4558C
IC12	8-759-008-91	s	IC TC4023BF

(DT-14PC BOARD)

Ref. No. or Q'ty	Part No.	SP	Description
IC13	8-759-009-10	s	IC MC14069UBF
IC14	8-759-008-79	s	IC MC14011BF
IC15	8-759-945-58	s	IC UPC4558C
IC16	8-759-945-58	s	IC UPC4558C
IC17	8-759-945-58	s	IC UPC4558C
IC18	8-759-945-58	s	IC UPC4558C
IC19	8-759-945-58	s	IC UPC4558C
IC20	8-759-945-58	s	IC UPC4558C
IC21	8-759-009-07	s	IC MC14053BF
IC22	8-759-009-07	s	IC MC14053BF
IC23	8-759-009-07	s	IC MC14053BF
IC43	8-759-205-78	s	IC TC504013BF
IC44	8-759-009-51	s	IC MC14538BF
IC45	8-759-009-11	s	IC MC14070BF
IC46	8-759-009-51	s	IC MC14538BF
IC47	8-759-205-78	s	IC TC504013BF
IC48	8-759-009-51	s	IC MC14538BF
IC50	8-759-009-07	s	IC MC14053BF
IC51	8-759-009-07	s	IC MC14053BF
IC101	8-752-006-12	s	IC CX20061
IC102	8-759-400-06	s	IC AN608P
IC103	8-759-324-11	s	IC HA12411
IC104	8-743-915-10	s	IC BX3915A
IC105	8-759-981-64	s	IC LM2903DQ
IC106	8-759-009-51	s	IC MC14538BF
L303	1-410-468-11	s	INDUCTOR 6.8uH
L304	1-408-429-00	s	INDUCTOR 470uH
Q1	8-729-201-05	s	TRANSISTOR 2SC2878-B
Q2	8-729-201-05	s	TRANSISTOR 2SC2878-B
Q301	8-729-119-76	s	TRANSISTOR 2SA1115P
Q302	8-729-119-78	s	TRANSISTOR 2SC2785-HFE
Q303	8-729-201-05	s	TRANSISTOR 2SC2878-B
Q304	8-729-119-78	s	TRANSISTOR 2SC2785-HFE
Q305	8-729-201-05	s	TRANSISTOR 2SC2878-B
Q501	8-729-119-78	s	TRANSISTOR 2SC2785-HFE
R2	1-249-434-11	s	CARBON 27K 5% 1/4W
R6	1-215-448-00	s	METAL 13K 1% 1/6W
R7	1-215-456-00	s	METAL 30K 1% 1/6W
R25	1-247-883-00	s	CARBON 150K 5% 1/4W
R26	1-249-428-11	s	CARBON 8.2K 5% 1/4W
R27	1-249-422-11	s	CARBON 2.7K 5% 1/4W
R30	1-249-430-11	s	CARBON 12K 5% 1/4W
R50	1-249-422-11	s	CARBON 2.7K 5% 1/4W
R51	1-249-428-11	s	CARBON 8.2K 5% 1/4W
R52	1-247-883-00	s	CARBON 150K 5% 1/4W
R55	1-249-430-11	s	CARBON 12K 5% 1/4W
R59	1-249-427-11	s	CARBON 6.8K 5% 1/4W
R61	1-215-446-00	s	METAL 11K 1% 1/6W
R62	1-249-422-11	s	CARBON 2.7K 5% 1/4W
R66	1-249-427-11	s	CARBON 6.8K 5% 1/4W
R76	1-249-436-11	s	CARBON 39K 5% 1/4W
R77	1-249-436-11	s	CARBON 39K 5% 1/4W
R80	1-215-458-00	s	METAL 36K 1% 1/6W
R81	1-249-430-11	s	CARBON 12K 5% 1/4W
R89	1-249-422-11	s	CARBON 2.7K 5% 1/4W

NOTE: Please see pages 19-51 and 19-52 for the parts that are not listed in the part list.

(DT-14PC BOARD)

Ref. No. or Q'ty	Part No.	SP	Description
R97	1-249-436-11	s	CARBON 39K 5% 1/4W
R99	1-249-436-11	s	CARBON 39K 5% 1/4W
R103	1-215-458-00	s	METAL 36K 1% 1/6W
R104	1-249-430-11	s	CARBON 12K 5% 1/4W
R111	1-215-446-00	s	METAL 11K 1% 1/6W
R112	1-249-422-11	s	CARBON 2.7K 5% 1/4W
R114	1-249-422-11	s	CARBON 2.7K 5% 1/4W
R137	1-249-430-11	s	CARBON 12K 5% 1/4W
R138	1-249-398-11	s	CARBON 27 5% 1/4W
R139	1-249-398-11	s	CARBON 27 5% 1/4W
R140	1-249-430-11	s	CARBON 12K 5% 1/4W
R272	1-249-426-11	s	CARBON 5.6K 5% 1/4W
R309	1-249-419-11	s	CARBON 1.5K 5% 1/4W
R316	1-215-446-00	s	METAL 11K 1% 1/6W
R317	1-215-446-00	s	METAL 11K 1% 1/6W
R324	1-249-419-11	s	CARBON 1.5K 5% 1/4W
R329	1-249-430-11	s	CARBON 12K 5% 1/4W
R331	1-249-426-11	s	CARBON 5.6K 5% 1/4W
R503	1-249-440-11	s	CARBON 82K 5% 1/4W
R505	1-247-885-00	s	CARBON 180K 5% 1/4W
R506	1-247-885-00	s	CARBON 180K 5% 1/4W
RV2	1-237-520-21	s	RES, ADJ, METAL 50K
RV3	1-237-520-21	s	RES, ADJ, METAL 50K
RV4	1-237-520-21	s	RES, ADJ, METAL 50K
RV5	1-237-520-21	s	RES, ADJ, METAL 50K
RV6	1-237-518-21	s	RES, ADJ, METAL 10K
RV7	1-237-518-21	s	RES, ADJ, METAL 10K
RV203	1-237-521-21	s	RES, ADJ, METAL 100K
RV304	1-237-520-21	s	RES, ADJ, METAL 50K
RV305	1-237-521-21	s	RES, ADJ, METAL 100K
S1	1-552-509-00	s	SWITCH, DIP 1-CKT

DT-15 BOARD

Ref. No. or Q'ty	Part No.	SP	Description
1pc	A-6715-355-A	o	MOUNTED CIRCUIT BOARD, DT-15
2pcs	1-533-217-31	s	HOLDER, FUSE
1pc	1-555-368-31	o	WIRE, GROUND
1pc	3-717-540-01	o	BRACKET, DT
1pc	3-717-541-02	o	CASE, SHIELD, DT
1pc	3-717-600-01	o	CASE (DT), SHIELD
C1	1-130-491-00	s	MYLAR 0.047uF 5% 50V
C2	1-123-321-00	s	ELECT 220uF 20% 16V
C3	1-123-321-00	s	ELECT 220uF 20% 16V
C4	1-123-321-00	s	ELECT 220uF 20% 16V
C5	1-123-321-00	s	ELECT 220uF 20% 16V
C6	1-123-321-00	s	ELECT 220uF 20% 16V
C7	1-123-321-00	s	ELECT 220uF 20% 16V
C8	1-130-834-00	s	FILM 1uF 5% 63V
C9	1-136-200-11	s	FILM 0.15uF 5% 400V
C10	1-136-200-11	s	FILM 0.15uF 5% 400V
C11	1-136-200-11	s	FILM 0.15uF 5% 400V
C12	1-136-200-11	s	FILM 0.15uF 5% 400V
C13	1-136-200-11	s	FILM 0.15uF 5% 400V
C14	1-136-200-11	s	FILM 0.15uF 5% 400V
C15	1-130-491-00	s	MYLAR 0.047uF 5% 50V
C16	1-130-491-00	s	MYLAR 0.047uF 5% 50V
C42	1-130-479-00	s	MYLAR 0.0047uF 5% 50V
C43	1-123-932-00	s	ELECT 4.7uF 20% 160V
C45	1-130-479-00	s	MYLAR 0.0047uF 5% 50V
C46	1-123-932-00	s	ELECT 4.7uF 20% 160V
C60	1-162-710-11	s	CERAMIC 100PF 1% 50V
C61	1-162-710-11	s	CERAMIC 100PF 1% 50V
CN611	1-506-477-11	s	CONNECTOR, 12P, MALE
CN612	1-506-475-11	s	CONNECTOR, 10P, MALE
D1	8-719-815-85	s	DIODE 1S1585
D2	8-719-300-33	s	DIODE RU-3AM
D3	8-719-300-33	s	DIODE RU-3AM
D4	8-719-300-33	s	DIODE RU-3AM
D5	8-719-300-33	s	DIODE RU-3AM
D7	8-719-400-18	s	DIODE MA152WK
D8	8-719-104-34	s	DIODE 1S2835
D9	8-719-800-76	s	DIODE 1SS226
D11	8-719-109-97	s	DIODE RD6.8EB1
D12	8-719-800-76	s	DIODE 1SS226
D15	8-719-104-34	s	DIODE 1S2835
F1	⚠1-532-078-00	s	FUSE 1A 250V
IC7	8-759-945-58	s	IC UPC4558C
IC8	8-759-945-58	s	IC UPC4558C
IC9	8-759-945-58	s	IC UPC4558C
IC10	8-759-945-58	s	IC UPC4558C
L1	1-410-852-11	s	COIL, CHOKE
L3	1-407-510-00	s	INDUCTOR 33mH
L4	1-407-510-00	s	INDUCTOR 33mH
L5	1-407-510-00	s	INDUCTOR 33mH
L6	1-407-510-00	s	INDUCTOR 33mH
Q1	8-729-101-68	s	TRANSISTOR 2SC2654
Q2	8-729-101-68	s	TRANSISTOR 2SC2654

NOTE: Please see pages 19-51 and 19-52 for the parts that are not listed in the part list.

(DT-15 BOARD)

Ref. No. or Q'ty	Part No.	SP	Description
Q6	8-729-105-97	s	TRANSISTOR 2SA1156-2K
Q7	8-729-141-78	s	TRANSISTOR 2SC3632-K
Q8	8-729-141-78	s	TRANSISTOR 2SC3632-K
Q9	8-729-202-38	s	TRANSISTOR 2SC3326N
Q10	8-729-216-22	s	TRANSISTOR 2SA1162
Q11	8-729-118-43	s	TRANSISTOR 2SA1413-L
Q12	8-729-105-97	s	TRANSISTOR 2SA1156-2K
Q13	8-729-141-78	s	TRANSISTOR 2SC3632-K
Q14	8-729-141-78	s	TRANSISTOR 2SC3632-K
Q15	8-729-202-38	s	TRANSISTOR 2SC3326N
Q16	8-729-216-22	s	TRANSISTOR 2SA1162
Q17	8-729-118-43	s	TRANSISTOR 2SA1413-L
R1	1-249-457-11	s	CARBON 6.8 5% 1/4W
R2	1-247-700-11	s	CARBON 100 5% 1/4W
R3	1-249-457-11	s	CARBON 6.8 5% 1/4W
R4	1-247-713-11	s	CARBON 1K 5% 1/4W
R47	1-214-929-00	s	METAL 470K 1% 1/2W
R52	1-214-924-00	s	METAL 300K 1% 1/2W
R54	1-214-915-00	s	METAL 120K 1% 1/2W
R55	1-214-915-00	s	METAL 120K 1% 1/2W
R58	1-247-755-11	s	CARBON 1.8K 5% 1/2W
R59	1-215-445-00	s	METAL 10K 1% 1/6W
R60	1-215-445-00	s	METAL 10K 1% 1/6W
R65	1-214-929-00	s	METAL 470K 1% 1/2W
R70	1-214-924-00	s	METAL 300K 1% 1/2W
R72	1-214-915-00	s	METAL 120K 1% 1/2W
R73	1-214-915-00	s	METAL 120K 1% 1/2W
R76	1-247-755-11	s	CARBON 1.8K 5% 1/2W
R130	1-215-493-00	s	METAL 1M 1% 1/6W
R131	1-215-493-00	s	METAL 1M 1% 1/6W
R132	1-215-493-00	s	METAL 1M 1% 1/6W
R133	1-215-493-00	s	METAL 1M 1% 1/6W
R134	1-215-464-00	s	METAL 62K 1% 1/6W
R139	1-215-464-00	s	METAL 62K 1% 1/6W
RV2	1-237-503-21	s	RES, ADJ, METAL 10K
T1	1-448-937-11	s	TRANSFORMER, CONVERTER

DUS-259 BOARD

Ref. No. or Q'ty	Part No.	SP	Description
Thia board is included in DM-56PC board.			
1pc	1-626-836-11	o	PRINTED CIRCUIT BOARD, DUS-259
C1	1-107-166-00	s	MICA 62PF 5% 500V
C3	1-107-077-00	s	MICA 47PF 5% 50V
CN1	1-564-783-11	o	CONNECTOR, 5P, MALE
L1	1-408-408-00	s	INDUCTOR 8.2uH
Q1	8-729-102-07	s	TRANSISTOR 2SC2223-F13
Q2	8-729-102-07	s	TRANSISTOR 2SC2223-F13

DUS-269 BOARD

Ref. No. or Q'ty	Part No.	SP	Description
This board is included in DM-56PC board.			
1pc	1-627-282-11	o	PRINTED CIRCUIT BOARD, DUS-269
C2	1-107-043-00	s	MICA 2.7PF 500V
CN1	1-566-473-11	o	CONNECTOR, 1P, MALE
CN2	1-566-473-11	o	CONNECTOR, 1P, MALE
CN3	1-566-473-11	o	CONNECTOR, 1P, MALE
CN4	1-566-473-11	o	CONNECTOR, 1P, MALE
L1	1-408-408-00	s	INDUCTOR 8.2uH
Q1	8-729-101-25	s	TRANSISTOR 2SC1009A
Q2	8-729-101-25	s	TRANSISTOR 2SC1009A
R1	1-216-651-11	s	METAL, CHIP 1K 0.5% 1/10W
R2	1-216-650-11	s	METAL, CHIP 910 0.5% 1/10W
R3	1-216-651-11	s	METAL, CHIP 1K 0.5% 1/10W
RV1	1-228-457-00	s	RES, ADJ, METAL 2K

DUS-270 BOARD

Ref. No. or Q'ty	Part No.	SP	Description
This board is included in VO-18P board.			
C655	1-126-153-11	s	ELECT 22uF 20% 6.3V
Q607	8-729-100-66	s	TRANSISTOR 2SC1623
Q608	8-729-100-66	s	TRANSISTOR 2SC1623

NOTE: Please see pages 19-51 and 19-52 for the parts that are not listed in the part list.

DUS-282 BOARD

Ref. No. or Q'ty	Part No.	SP	Description
This board is included in DT-14PC board.			
1pc	1-566-085-00	s	PIN, SIL 20P
IC53	8-759-908-92	s	IC TL084CNS

DUS-288 BOARD

Ref. No. or Q'ty	Part No.	SP	Description
This board is included in DM-56PC board.			
1pc	1-628-943-11	o	PRINTED CIRCUIT BOARD, DUS-288
C1	1-163-241-11	s	CERAMIC, CHIP 39PF 5% 50V
CN1	1-566-473-11	o	CONNECTOR, 1P, MALE
CN2	1-566-473-11	o	CONNECTOR, 1P, MALE
CV1	1-141-260-00	s	CAP, TRIMMER 50PF
Q1	8-729-109-44	s	TRANSISTOR 2SK94
R1	1-216-683-11	s	METAL, CHIP 22K 0.5% 1/10W

DUS-295 BOARD

Ref. No. or Q'ty	Part No.	SP	Description
This board is included in AU-75P board.			
1pc	1-630-205-11	o	PRINTED CIRCUIT BOARD, DUS-295
CV421	1-141-390-11	s	CAP, TRIMMER 90PF
CV521	1-141-390-11	s	CAP, TRIMMER 90PF
Q421	8-729-202-38	s	TRANSISTOR 2SC3326N
Q521	8-729-202-38	s	TRANSISTOR 2SC3326N
R843	1-216-699-11	s	METAL, CHIP 100K 0.5% 1/10W
R850	1-216-682-11	s	METAL, CHIP 20K 0.5% 1/10W

DUS-345 BOARD

Ref. No. or Q'ty	Part No.	SP	Description
This board is included in DM-56PC board.			
1pc	1-635-407-11	o	PRINTED CIRCUIT BOARD, DUS-345
C3	1-163-001-11	s	CERAMIC, CHIP 220PF 10% 50V
C9	1-163-001-11	s	CERAMIC, CHIP 220PF 10% 50V
C12	1-163-809-11	s	CERAMIC, CHIP 0.047uF 10% 25V
C13	1-163-809-11	s	CERAMIC, CHIP 0.047uF 10% 25V
D1	8-719-104-34	s	DIODE 1S2835
D2	8-719-104-34	s	DIODE 1S2835
IC1	8-759-925-90	s	IC SN74HC74NS
IC2	8-759-925-74	s	IC SN74HC04NS
IC3	8-759-925-90	s	IC SN74HC74NS
Q1	8-729-901-05	s	TRANSISTOR DTA124EK
Q2	8-729-201-27	s	TRANSISTOR 2SC2715-Y
Q3	8-729-201-27	s	TRANSISTOR 2SC2715-Y
Q4	8-729-901-05	s	TRANSISTOR DTA124EK
Q5	8-729-201-27	s	TRANSISTOR 2SC2715-Y
R7	1-216-666-11	s	METAL, CHIP 4.3K 0.5% 1/10W
R12	1-216-668-11	s	METAL, CHIP 5.1K 0.5% 1/10W

DUS-362 BOARD

Ref. No. or Q'ty	Part No.	SP	Description
This board is included in RP-46 board.			
1pc	1-636-308-11	o	PRINTED CIRCUIT BOARD, DUS-362
C751	1-135-070-00	s	TANTALUM, CHIP 0.1uF 10% 35V
R751	1-216-667-11	s	METAL, CHIP 4.7K 0.5% 1/10W
IC751	8-759-925-90	s	IC SN74HC74NS
IC752	8-759-803-77	s	IC LC74HC32
IC753	8-759-942-65	s	IC SN74265N

NOTE: Please see pages 19-51 and 19-52 for the parts that are not listed in the part list.

EN-48P BOARD

Ref. No. or Q'ty	Part No.	SP	Description
1pc	A-6711-891-A	o	MOUNTED CIRCUIT BOARD, EN-48P
2pcs	7-622-207-05	s	N 2.6, TYPE 2
2pcs	7-628-254-30	s	SCREW +PS 2.6X10
C9	1-107-042-00	s	MICA 2.2PF 500V
C10	1-130-491-00	s	MYLAR 0.047uF 5% 50V
C11	1-131-374-00	s	TANTALUM 33uF 10% 16V
C12	1-126-153-11	s	ELECT 22uF 20% 6.3V
C41	1-162-724-11	s	CERAMIC 390PF 1% 50V
C49	1-107-157-00	s	MICA 27PF 5% 500V
C60	1-130-495-00	s	MYLAR 0.1uF 5% 50V
C62	1-107-049-00	s	MICA 8.2PF 500V
C64	1-162-712-11	s	CERAMIC 120PF 1% 50V
C66	1-130-495-00	s	MYLAR 0.1uF 5% 50V
C71	1-162-708-11	s	CERAMIC 82PF 5% 50V
C72	1-107-158-00	s	MICA 30PF 5% 500V
C73	1-130-495-00	s	MYLAR 0.1uF 5% 50V
C86	1-162-724-11	s	CERAMIC 390PF 1% 50V
C94	1-131-365-00	s	TANTALUM 10uF 10% 20V
C95	1-131-365-00	s	TANTALUM 10uF 10% 20V
C97	1-107-042-00	s	MICA 2.2PF 500V
C98	1-130-491-00	s	MYLAR 0.047uF 5% 50V
C101	1-131-365-00	s	TANTALUM 10uF 10% 20V
C102	1-131-365-00	s	TANTALUM 10uF 10% 20V
C103	1-131-374-00	s	TANTALUM 33uF 10% 16V
C112	1-124-225-00	s	ELECT 100uF 20% 6.3V
C118	1-124-225-00	s	ELECT 100uF 20% 6.3V
C134	1-124-225-00	s	ELECT 100uF 20% 6.3V
C135	1-131-374-00	s	TANTALUM 33uF 10% 16V
C137	1-131-374-00	s	TANTALUM 33uF 10% 16V
C140	1-131-374-00	s	TANTALUM 33uF 10% 16V
C215	1-130-495-00	s	MYLAR 0.1uF 5% 50V
C217	1-107-076-00	s	MICA 43PF 5% 50V
C221	1-130-495-00	s	MYLAR 0.1uF 5% 50V
C351	1-107-048-00	s	MICA 6.8PF 500V
C352	1-107-044-00	s	MICA 3.3PF 500V
C353	1-107-048-00	s	MICA 6.8PF 500V
C354	1-107-044-00	s	MICA 3.3PF 500V
C355	1-107-202-00	s	MICA 10PF 5% 500V
C501	1-107-159-00	s	MICA 33PF 5% 500V
C502	1-107-209-00	s	MICA 20PF 5% 500V
C601	1-107-159-00	s	MICA 33PF 5% 500V
C602	1-107-209-00	s	MICA 20PF 5% 500V
C701	1-107-202-00	s	MICA 10PF 5% 500V
C702	1-107-210-00	s	MICA 22PF 5% 500V
C704	1-130-495-00	s	MYLAR 0.1uF 5% 50V
C706	1-107-049-00	s	MICA 8.2PF 500V
C707	1-107-202-00	s	MICA 10PF 5% 500V
C709	1-130-495-00	s	MYLAR 0.1uF 5% 50V
C714	1-130-495-00	s	MYLAR 0.1uF 5% 50V
CN102	1-506-748-11	s	CONNECTOR, DIN 96P, MALE
D1	8-719-104-34	s	DIODE 1S2835
DL1	1-415-538-11	s	DELAY LINE 100ns
FL1	1-236-004-11	s	FILTER, LOW-PASS

(EN-48P BOARD)

Ref. No. or Q'ty	Part No.	SP	Description
FL2	1-236-004-11	s	FILTER, LOW-PASS
FL3	1-236-529-11	s	FILTER, BANDPASS 4.43MHz
FL4	1-236-119-11	s	FILTER, BANDPASS 4.43MHz
IC1	8-759-014-29	s	IC MC34184M
IC2	1-808-743-11	s	IC BX6389
IC3	8-759-009-07	s	IC MC14053BF
IC4	8-759-906-59	s	IC CX22017
IC5	8-752-053-97	s	IC CX20158-1
IC6	8-759-030-16	s	IC MC34182M
IC10	8-759-012-02	s	IC MC10H124M
IC11	8-759-012-03	s	IC MC10H131M
IC12	8-759-929-73	s	IC SN74LS00NS
IC13	8-759-011-98	s	IC MC10H113M
IC14	8-759-925-74	s	IC SN74HC04NS
IC15	8-759-007-50	s	IC MC74HC11F
IC16	8-759-922-49	s	IC SN74LS74ANS
IC17	8-759-908-17	s	IC TL082CPS
#IC18	8-759-239-55	s	IC TC74HC123AF
IC19	8-759-907-81	s	IC SN74LS221NS
IC20	8-752-306-51	s	IC CX23065A
IC21	8-759-929-78	s	IC SN74LS04NS
IC22	8-759-930-56	s	IC SN74LS163ANS
IC24	8-759-941-27	s	IC MB4002PF
IC25	8-759-922-49	s	IC SN74LS74ANS
IC26	8-759-941-17	s	IC SN74LS06NS
IC27	8-759-907-81	s	IC SN74LS221NS
IC31	8-759-922-49	s	IC SN74LS74ANS
IC32	8-759-907-81	s	IC SN74LS221NS
IC33	8-759-907-81	s	IC SN74LS221NS
IC34	8-759-925-90	s	IC SN74HC74NS
IC35	8-759-030-16	s	IC MC34182M
IC36	8-759-907-81	s	IC SN74LS221NS
IC37	8-759-929-99	s	IC SN74LS32NS
IC38	8-759-009-07	s	IC MC14053BF
#IC39	8-759-239-58	s	IC TC74HC221AF
IC50	8-759-014-29	s	IC MC34184M
IC51	8-752-015-81	s	IC CX20158
IC53	8-752-015-81	s	IC CX20158
IC54	8-759-009-07	s	IC MC14053BF
IC56	8-759-009-07	s	IC MC14053BF
IC60	1-808-743-11	s	IC BX6389
IC70	8-759-030-16	s	IC MC34182M
IC71	8-752-015-81	s	IC CX20158
IC72	8-752-015-81	s	IC CX20158
IC101	8-759-982-25	s	IC RC78L09A
IC102	8-759-982-44	s	IC RC79L05A
IC103	8-759-937-61	s	IC S-81230AG
IC104	8-759-941-79	s	IC S-80230AG
IC105	8-759-908-15	s	IC TL431CLP
IC106	8-759-982-21	s	IC RC78L05A
IC107	8-759-982-23	s	IC TA78L008AP
IC108	8-759-982-44	s	IC RC79L05A
IC109	8-759-982-46	s	IC RC79L08A
IC110	8-759-982-21	s	IC RC78L05A
IC111	8-759-982-23	s	IC TA78L008AP
IC112	8-759-982-44	s	IC RC79L05A

NOTE: Please see pages 19-51 and 19-52 for the parts that are not listed in the part list.

(EN-48P BOARD)

Ref. No. or Q'ty	Part No.	SP	Description
IC113	8-759-982-46	s	IC RC79L08A
IC114	8-759-908-15	s	IC TL431CLP
IC115	8-759-982-46	s	IC RC79L08A
IC116	8-759-982-21	s	IC RC78L05A
IC117	8-759-982-44	s	IC RC79L05A
IC201	8-759-012-02	s	IC MC10H124M
IC202	8-759-012-03	s	IC MC10H131M
IC203	8-759-011-98	s	IC MC10H113M
IC204	8-752-306-51	s	IC CX23065A
IC206	8-759-930-56	s	IC SN74LS163ANS
IC501	8-759-981-51	s	IC RC1496M
IC601	8-759-981-51	s	IC RC1496M
#IC701	8-759-239-55	s	IC TC74HC123AF
IC702	8-759-902-88	s	IC SN74LS123NS
IC703	8-759-030-16	s	IC MC34182M
IC704	8-759-922-49	s	IC SN74LS74ANS
IC705	8-759-030-16	s	IC MC34182M
L100	1-421-329-00	s	COIL, CHOKE
L101	1-421-329-00	s	COIL, CHOKE
L102	1-421-329-00	s	COIL, CHOKE
L103	1-421-329-00	s	COIL, CHOKE
L104	1-421-329-00	s	COIL, CHOKE
L352	1-410-468-11	s	INDUCTOR 6.8uH
Q1	8-729-201-26	s	TRANSISTOR 2SC2715
Q2	8-729-216-22	s	TRANSISTOR 2SA1162
Q3	8-729-102-07	s	TRANSISTOR 2SC2223-F13
Q4	8-729-201-26	s	TRANSISTOR 2SC2715
Q6	8-729-201-26	s	TRANSISTOR 2SC2715
Q7	8-729-216-22	s	TRANSISTOR 2SA1162
Q8	8-729-201-26	s	TRANSISTOR 2SC2715
Q9	8-729-201-26	s	TRANSISTOR 2SC2715
Q10	8-729-201-26	s	TRANSISTOR 2SC2715
Q11	8-729-201-26	s	TRANSISTOR 2SC2715
Q13	8-729-216-22	s	TRANSISTOR 2SA1162
Q14	8-729-216-22	s	TRANSISTOR 2SA1162
Q15	8-729-102-07	s	TRANSISTOR 2SC2223-F13
Q16	8-729-122-63	s	TRANSISTOR 2SA1226
Q17	8-729-102-07	s	TRANSISTOR 2SC2223-F13
Q18	8-729-201-26	s	TRANSISTOR 2SC2715
Q25	8-729-201-26	s	TRANSISTOR 2SC2715
Q501	8-729-201-26	s	TRANSISTOR 2SC2715
Q502	8-729-216-22	s	TRANSISTOR 2SA1162
Q503	8-729-201-26	s	TRANSISTOR 2SC2715
Q504	8-729-201-26	s	TRANSISTOR 2SC2715
Q601	8-729-201-26	s	TRANSISTOR 2SC2715
Q602	8-729-216-22	s	TRANSISTOR 2SA1162
Q603	8-729-201-26	s	TRANSISTOR 2SC2715
Q604	8-729-201-26	s	TRANSISTOR 2SC2715
Q605	8-729-201-26	s	TRANSISTOR 2SC2715
R3	1-216-639-11	s	METAL, CHIP 330 0.5% 1/10W
R4	1-216-639-11	s	METAL, CHIP 330 0.5% 1/10W
R5	1-216-659-11	s	METAL, CHIP 2.2K 0.5% 1/10W
R6	1-216-654-11	s	METAL, CHIP 1.3K 0.5% 1/10W
R14	1-216-687-11	s	METAL, CHIP 33K 0.5% 1/10W

(EN-48P BOARD)

Ref. No. or Q'ty	Part No.	SP	Description
R15	1-216-645-11	s	METAL, CHIP 560 0.5% 1/10W
R18	1-216-638-11	s	METAL, CHIP 300 0.5% 1/10W
R22	1-216-644-11	s	METAL, CHIP 510 0.5% 1/10W
R23	1-216-644-11	s	METAL, CHIP 510 0.5% 1/10W
R27	1-216-643-11	s	METAL, CHIP 470 0.5% 1/10W
R29	1-216-641-11	s	METAL, CHIP 390 0.5% 1/10W
R30	1-216-649-11	s	METAL, CHIP 820 0.5% 1/10W
R31	1-216-651-11	s	METAL, CHIP 1K 0.5% 1/10W
R33	1-216-654-11	s	METAL, CHIP 1.3K 0.5% 1/10W
R39	1-216-639-11	s	METAL, CHIP 330 0.5% 1/10W
R40	1-216-639-11	s	METAL, CHIP 330 0.5% 1/10W
R41	1-216-659-11	s	METAL, CHIP 2.2K 0.5% 1/10W
R42	1-216-654-11	s	METAL, CHIP 1.3K 0.5% 1/10W
R48	1-216-645-11	s	METAL, CHIP 560 0.5% 1/10W
R49	1-216-687-11	s	METAL, CHIP 33K 0.5% 1/10W
R52	1-216-687-11	s	METAL, CHIP 33K 0.5% 1/10W
R53	1-216-645-11	s	METAL, CHIP 560 0.5% 1/10W
R54	1-216-627-11	s	METAL, CHIP 100 0.5% 1/10W
R55	1-216-627-11	s	METAL, CHIP 100 0.5% 1/10W
R56	1-216-641-11	s	METAL, CHIP 390 0.5% 1/10W
R57	1-216-631-11	s	METAL, CHIP 150 0.5% 1/10W
R58	1-216-619-11	s	METAL, CHIP 47 0.5% 1/10W
R59	1-216-611-11	s	METAL, CHIP 22 0.5% 1/10W
R60	1-216-687-11	s	METAL, CHIP 33K 0.5% 1/10W
R61	1-216-645-11	s	METAL, CHIP 560 0.5% 1/10W
R62	1-216-627-11	s	METAL, CHIP 100 0.5% 1/10W
R63	1-216-627-11	s	METAL, CHIP 100 0.5% 1/10W
R65	1-216-634-11	s	METAL, CHIP 200 0.5% 1/10W
R71	1-216-631-11	s	METAL, CHIP 150 0.5% 1/10W
R72	1-216-631-11	s	METAL, CHIP 150 0.5% 1/10W
R73	1-216-641-11	s	METAL, CHIP 390 0.5% 1/10W
R74	1-216-619-11	s	METAL, CHIP 47 0.5% 1/10W
R75	1-216-611-11	s	METAL, CHIP 22 0.5% 1/10W
R77	1-216-631-11	s	METAL, CHIP 150 0.5% 1/10W
#R86	1-216-646-11	s	METAL, CHIP 620 0.5% 1/10W
#R87	1-216-673-11	s	METAL, CHIP 8.2K 0.5% 1/10W
R96	1-216-639-11	s	METAL, CHIP 330 0.5% 1/10W
R97	1-216-645-11	s	METAL, CHIP 560 0.5% 1/10W
R98	1-216-639-11	s	METAL, CHIP 330 0.5% 1/10W
R99	1-216-645-11	s	METAL, CHIP 560 0.5% 1/10W
R100	1-216-655-11	s	METAL, CHIP 1.5K 0.5% 1/10W
R101	1-216-638-11	s	METAL, CHIP 300 0.5% 1/10W
R102	1-216-665-11	s	METAL, CHIP 3.9K 0.5% 1/10W
R103	1-216-675-11	s	METAL, CHIP 10K 0.5% 1/10W
R104	1-216-659-11	s	METAL, CHIP 2.2K 0.5% 1/10W
R105	1-216-681-11	s	METAL, CHIP 18K 0.5% 1/10W
R106	1-216-685-11	s	METAL, CHIP 27K 0.5% 1/10W
R107	1-216-660-11	s	METAL, CHIP 2.4K 0.5% 1/10W
R119	1-216-669-11	s	METAL, CHIP 5.6K 0.5% 1/10W
R120	1-216-669-11	s	METAL, CHIP 5.6K 0.5% 1/10W
R121	1-216-683-11	s	METAL, CHIP 22K 0.5% 1/10W
R122	1-216-643-11	s	METAL, CHIP 470 0.5% 1/10W
R123	1-216-671-11	s	METAL, CHIP 6.8K 0.5% 1/10W
R124	1-216-671-11	s	METAL, CHIP 6.8K 0.5% 1/10W
R125	1-216-663-11	s	METAL, CHIP 3.3K 0.5% 1/10W
R127	1-216-692-11	s	METAL, CHIP 51K 0.5% 1/10W

NOTE: Please see pages 19-51 and 19-52 for the parts that are not listed in the part list.

(EN-48P BOARD)

Ref. No. or Q'ty	Part No.	SP	Description
R128	1-216-675-11	s	METAL, CHIP 10K 0.5% 1/10W
R129	1-216-675-11	s	METAL, CHIP 10K 0.5% 1/10W
R157	1-216-667-11	s	METAL, CHIP 4.7K 0.5% 1/10W
R158	1-216-673-11	s	METAL, CHIP 8.2K 0.5% 1/10W
R163	1-216-682-11	s	METAL, CHIP 20K 0.5% 1/10W
R164	1-216-679-11	s	METAL, CHIP 15K 0.5% 1/10W
R167	1-216-683-11	s	METAL, CHIP 22K 0.5% 1/10W
R168	1-216-699-11	s	METAL, CHIP 100K 0.5% 1/10W
R170	1-216-667-11	s	METAL, CHIP 4.7K 0.5% 1/10W
R172	1-216-683-11	s	METAL, CHIP 22K 0.5% 1/10W
R180	1-216-687-11	s	METAL, CHIP 33K 0.5% 1/10W
R181	1-216-645-11	s	METAL, CHIP 560 0.5% 1/10W
R182	1-216-627-11	s	METAL, CHIP 100 0.5% 1/10W
R183	1-216-627-11	s	METAL, CHIP 100 0.5% 1/10W
R187	1-216-611-11	s	METAL, CHIP 22 0.5% 1/10W
R188	1-216-619-11	s	METAL, CHIP 47 0.5% 1/10W
R189	1-216-638-11	s	METAL, CHIP 300 0.5% 1/10W
R190	1-216-638-11	s	METAL, CHIP 300 0.5% 1/10W
R191	1-216-649-11	s	METAL, CHIP 820 0.5% 1/10W
R192	1-216-619-11	s	METAL, CHIP 47 0.5% 1/10W
R193	1-216-611-11	s	METAL, CHIP 22 0.5% 1/10W
R195	1-216-649-11	s	METAL, CHIP 820 0.5% 1/10W
R196	1-216-649-11	s	METAL, CHIP 820 0.5% 1/10W
R210	1-216-649-11	s	METAL, CHIP 820 0.5% 1/10W
R211	1-216-649-11	s	METAL, CHIP 820 0.5% 1/10W
R212	1-216-629-11	s	METAL, CHIP 120 0.5% 1/10W
R213	1-216-629-11	s	METAL, CHIP 120 0.5% 1/10W
R233	1-216-657-11	s	METAL, CHIP 1.8K 0.5% 1/10W
R235	1-216-665-11	s	METAL, CHIP 3.9K 0.5% 1/10W
R236	1-216-668-11	s	METAL, CHIP 5.1K 0.5% 1/10W
R237	1-216-683-11	s	METAL, CHIP 22K 0.5% 1/10W
R238	1-216-643-11	s	METAL, CHIP 470 0.5% 1/10W
R239	1-216-667-11	s	METAL, CHIP 4.7K 0.5% 1/10W
R244	1-216-692-11	s	METAL, CHIP 51K 0.5% 1/10W
R245	1-215-441-00	s	METAL 6.8K 1% 1/6W
R246	1-215-451-00	s	METAL 18K 1% 1/6W
R300	1-249-401-11	s	CARBON 47 5% 1/4W
R301	1-249-400-11	s	CARBON 39 5% 1/4W
R302	1-249-400-11	s	CARBON 39 5% 1/4W
R305	1-249-400-11	s	CARBON 39 5% 1/4W
R351	1-216-651-11	s	METAL, CHIP 1K 0.5% 1/10W
R352	1-216-651-11	s	METAL, CHIP 1K 0.5% 1/10W
R353	1-216-649-11	s	METAL, CHIP 820 0.5% 1/10W
R354	1-216-651-11	s	METAL, CHIP 1K 0.5% 1/10W
R355	1-216-651-11	s	METAL, CHIP 1K 0.5% 1/10W
R356	1-216-649-11	s	METAL, CHIP 820 0.5% 1/10W
R357	1-216-651-11	s	METAL, CHIP 1K 0.5% 1/10W
R358	1-216-651-11	s	METAL, CHIP 1K 0.5% 1/10W
R359	1-216-627-11	s	METAL, CHIP 100 0.5% 1/10W
R360	1-216-659-11	s	METAL, CHIP 2.2K 0.5% 1/10W
R501	1-216-675-11	s	METAL, CHIP 10K 0.5% 1/10W
R503	1-216-651-11	s	METAL, CHIP 1K 0.5% 1/10W
R505	1-216-651-11	s	METAL, CHIP 1K 0.5% 1/10W
R508	1-216-627-11	s	METAL, CHIP 100 0.5% 1/10W
R509	1-216-675-11	s	METAL, CHIP 10K 0.5% 1/10W
R510	1-216-675-11	s	METAL, CHIP 10K 0.5% 1/10W

(EN-48P BOARD)

Ref. No. or Q'ty	Part No.	SP	Description
R511	1-216-627-11	s	METAL, CHIP 100 0.5% 1/10W
R512	1-216-671-11	s	METAL, CHIP 6.8K 0.5% 1/10W
R513	1-216-651-11	s	METAL, CHIP 1K 0.5% 1/10W
R514	1-216-659-11	s	METAL, CHIP 2.2K 0.5% 1/10W
R522	1-216-649-11	s	METAL, CHIP 820 0.5% 1/10W
R523	1-216-649-11	s	METAL, CHIP 820 0.5% 1/10W
R524	1-216-629-11	s	METAL, CHIP 120 0.5% 1/10W
R525	1-216-629-11	s	METAL, CHIP 120 0.5% 1/10W
R601	1-216-679-11	s	METAL, CHIP 15K 0.5% 1/10W
R603	1-216-651-11	s	METAL, CHIP 1K 0.5% 1/10W
R604	1-216-665-11	s	METAL, CHIP 3.9K 0.5% 1/10W
R605	1-216-651-11	s	METAL, CHIP 1K 0.5% 1/10W
R608	1-216-627-11	s	METAL, CHIP 100 0.5% 1/10W
R609	1-216-675-11	s	METAL, CHIP 10K 0.5% 1/10W
R610	1-216-675-11	s	METAL, CHIP 10K 0.5% 1/10W
R611	1-216-627-11	s	METAL, CHIP 100 0.5% 1/10W
R612	1-216-671-11	s	METAL, CHIP 6.8K 0.5% 1/10W
R613	1-216-651-11	s	METAL, CHIP 1K 0.5% 1/10W
R614	1-216-659-11	s	METAL, CHIP 2.2K 0.5% 1/10W
R615	1-216-651-11	s	METAL, CHIP 1K 0.5% 1/10W
R617	1-216-651-11	s	METAL, CHIP 1K 0.5% 1/10W
R619	1-216-651-11	s	METAL, CHIP 1K 0.5% 1/10W
R620	1-216-671-11	s	METAL, CHIP 6.8K 0.5% 1/10W
R621	1-216-634-11	s	METAL, CHIP 200 0.5% 1/10W
R622	1-216-666-11	s	METAL, CHIP 4.3K 0.5% 1/10W
R701	1-216-675-11	s	METAL, CHIP 10K 0.5% 1/10W
R702	1-216-675-11	s	METAL, CHIP 10K 0.5% 1/10W
R703	1-216-661-11	s	METAL, CHIP 2.7K 0.5% 1/10W
R704	1-216-667-11	s	METAL, CHIP 4.7K 0.5% 1/10W
R705	1-216-685-11	s	METAL, CHIP 27K 0.5% 1/10W
R706	1-216-647-11	s	METAL, CHIP 680 0.5% 1/10W
R707	1-216-679-11	s	METAL, CHIP 15K 0.5% 1/10W
R708	1-216-643-11	s	METAL, CHIP 470 0.5% 1/10W
R709	1-216-661-11	s	METAL, CHIP 2.7K 0.5% 1/10W
R710	1-216-667-11	s	METAL, CHIP 4.7K 0.5% 1/10W
R711	1-216-683-11	s	METAL, CHIP 22K 0.5% 1/10W
R712	1-216-651-11	s	METAL, CHIP 1K 0.5% 1/10W
R713	1-216-679-11	s	METAL, CHIP 15K 0.5% 1/10W
R714	1-216-643-11	s	METAL, CHIP 470 0.5% 1/10W
R721	1-216-681-11	s	METAL, CHIP 18K 0.5% 1/10W
R722	1-216-655-11	s	METAL, CHIP 1.5K 0.5% 1/10W
R723	1-216-679-11	s	METAL, CHIP 15K 0.5% 1/10W
R724	1-216-643-11	s	METAL, CHIP 470 0.5% 1/10W
RV1	1-237-512-21	s	RES, ADJ, METAL 100
RV2	1-237-503-21	s	RES, ADJ, METAL 10K
RV4	1-237-514-21	s	RES, ADJ, METAL 500
RV6	1-237-503-21	s	RES, ADJ, METAL 10K
RV7	1-237-514-21	s	RES, ADJ, METAL 500
RV12	1-237-515-21	s	RES, ADJ, METAL 1K
RV13	1-237-518-21	s	RES, ADJ, METAL 10K
RV14	1-237-514-21	s	RES, ADJ, METAL 500
RV17	1-237-518-21	s	RES, ADJ, METAL 10K
RV19	1-237-517-21	s	RES, ADJ, METAL 5K
RV20	1-237-516-21	s	RES, ADJ, METAL 2K
RV21	1-237-518-21	s	RES, ADJ, METAL 10K
RV22	1-237-517-21	s	RES, ADJ, METAL 5K

NOTE: Please see pages 19-51 and 19-52 for the parts that are not listed in the part list.

(EN-48P BOARD)

Ref. No. or Q'ty	Part No.	SP	Description
RV25	1-237-519-21	s	RES, ADJ, METAL 20K
RV26	1-237-520-21	s	RES, ADJ, METAL 50K
RV27	1-237-518-21	s	RES, ADJ, METAL 10K
RV28	1-237-517-21	s	RES, ADJ, METAL 5K
RV30	1-237-503-21	s	RES, ADJ, METAL 10K
RV31	1-237-503-21	s	RES, ADJ, METAL 10K
RV33	1-237-512-21	s	RES, ADJ, METAL 100
RV34	1-237-512-21	s	RES, ADJ, METAL 100
RV35	1-224-935-00	s	RES, VAR METAL 200
RV36	1-224-935-00	s	RES, VAR METAL 200
RV40	1-237-503-21	s	RES, ADJ, METAL 10K
RV41	1-224-935-00	s	RES, VAR METAL 200
RV42	1-224-935-00	s	RES, VAR METAL 200
RV203	1-237-501-21	s	RES, ADJ, METAL 2K
RV350	1-237-514-21	s	RES, ADJ, METAL 500
RV501	1-237-518-21	s	RES, ADJ, METAL 10K
RV502	1-237-505-21	s	RES, ADJ, METAL 50K
RV602	1-237-505-21	s	RES, ADJ, METAL 50K
RV701	1-237-517-21	s	RES, ADJ, METAL 5K
RV702	1-237-517-21	s	RES, ADJ, METAL 5K
RV703	1-237-517-21	s	RES, ADJ, METAL 5K
S1	1-571-259-11	s	SWITCH, SLIDE
S2	1-571-259-11	s	SWITCH, SLIDE
TH201	1-800-202-XX	s	THERMISTOR S-10K
X1	1-579-103-11	s	VCO, 17.734475MHz
X201	1-579-103-11	s	VCO, 17.734475MHz

EQ-26 BOARD

Ref. No. or Q'ty	Part No.	SP	Description
This board is included in DM-56PC board.			
1pc	1-628-676-11	o	PRINTED CIRCUIT BOARD, EQ-26
CN1	1-566-473-11	o	CONNECTOR, 1P, MALE
CN2	1-566-473-11	o	CONNECTOR, 1P, MALE
CN3	1-566-473-11	o	CONNECTOR, 1P, MALE
CN4	1-566-473-11	o	CONNECTOR, 1P, MALE
CN5	1-566-473-11	o	CONNECTOR, 1P, MALE
CN6	1-566-473-11	o	CONNECTOR, 1P, MALE
CN7	1-566-473-11	o	CONNECTOR, 1P, MALE
CN8	1-566-473-11	o	CONNECTOR, 1P, MALE
Q1	8-729-102-07	s	TRANSISTOR 2SC2223-F13
Q2	8-729-102-07	s	TRANSISTOR 2SC2223-F13
Q3	8-729-102-07	s	TRANSISTOR 2SC2223-F13
Q4	8-729-102-07	s	TRANSISTOR 2SC2223-F13
Q5	8-729-102-07	s	TRANSISTOR 2SC2223-F13
Q6	8-729-102-07	s	TRANSISTOR 2SC2223-F13
Q7	8-729-102-07	s	TRANSISTOR 2SC2223-F13
Q8	8-729-102-07	s	TRANSISTOR 2SC2223-F13
RV1	1-228-457-00	s	RES, ADJ, METAL 2K
RV2	1-228-457-00	s	RES, ADJ, METAL 2K
RV3	1-228-457-00	s	RES, ADJ, METAL 2K
RV4	1-228-457-00	s	RES, ADJ, METAL 2K
RV5	1-228-457-00	s	RES, ADJ, METAL 2K
RV6	1-228-457-00	s	RES, ADJ, METAL 2K
RV7	1-228-457-00	s	RES, ADJ, METAL 2K
RV8	1-228-457-00	s	RES, ADJ, METAL 2K

NOTE: Please see pages 19-51 and 19-52 for the parts that are not listed in the part list.

EQ-28 BOARD

Ref. No. or Q'ty	Part No.	SP	Description
This board is included in DM-56PC board.			
1pc	1-628-975-11	o	PRINTED CIRCUIT BOARD, EQ-28
CN1	1-566-473-11	o	CONNECTOR, 1P, MALE
CN2	1-566-473-11	o	CONNECTOR, 1P, MALE
CN3	1-566-473-11	o	CONNECTOR, 1P, MALE
CN4	1-566-473-11	o	CONNECTOR, 1P, MALE
CN5	1-566-473-11	o	CONNECTOR, 1P, MALE
CN6	1-566-473-11	o	CONNECTOR, 1P, MALE
CN7	1-566-473-11	o	CONNECTOR, 1P, MALE
CN8	1-566-473-11	o	CONNECTOR, 1P, MALE
Q1	8-729-102-07	s	TRANSISTOR 2SC2223-F13
Q2	8-729-102-07	s	TRANSISTOR 2SC2223-F13
Q3	8-729-102-07	s	TRANSISTOR 2SC2223-F13
Q4	8-729-102-07	s	TRANSISTOR 2SC2223-F13
Q5	8-729-102-07	s	TRANSISTOR 2SC2223-F13
Q6	8-729-102-07	s	TRANSISTOR 2SC2223-F13
Q7	8-729-102-07	s	TRANSISTOR 2SC2223-F13
Q8	8-729-102-07	s	TRANSISTOR 2SC2223-F13
RV1	1-228-457-00	s	RES, ADJ, METAL 2K
RV2	1-228-457-00	s	RES, ADJ, METAL 2K
RV3	1-228-457-00	s	RES, ADJ, METAL 2K
RV4	1-228-457-00	s	RES, ADJ, METAL 2K
RV5	1-228-457-00	s	RES, ADJ, METAL 2K
RV6	1-228-457-00	s	RES, ADJ, METAL 2K
RV7	1-228-457-00	s	RES, ADJ, METAL 2K
RV8	1-228-457-00	s	RES, ADJ, METAL 2K

EX-116 BOARD

Ref. No. or Q'ty	Part No.	SP	Description
1pc	A-6729-474-A	s	MOUNTED CIRCUIT BOARD, EX-116
1pc	3-701-632-00	s	BAG, POLY
1pc	7-621-259-65	s	SCREW +P 2.6X10
1pc	7-621-775-20	s	SCREW +B 2.6X5
1pc	7-622-207-05	s	N 2.6, TYPE 2
1pc	7-682-546-09	s	SCREW +B 3X5
CN1	1-506-748-11	s	CONNECTOR, DIN 96P, MALE
CN2	1-506-748-11	s	CONNECTOR, DIN 96P, MALE
CN3	1-563-341-11	s	CONNECTOR, DIN 96P, FEMALE
CN4	1-563-341-11	s	CONNECTOR, DIN 96P, FEMALE

EX-167 BOARD

Ref. No. or Q'ty	Part No.	SP	Description
1pc	A-6729-671-A	s	MOUNTED CIRCUIT BOARD, EX-167
1pc	1-563-339-11	o	CONNECTOR, DIN 48P, FEMALE
1pc	3-701-630-00	s	BAG, POLY
1pc	7-621-259-65	s	SCREW +P 2.6X10
1pc	7-621-775-20	s	SCREW +B 2.6X5
1pc	7-622-207-05	s	N 2.6, TYPE 2
CN1	1-506-748-11	s	CONNECTOR, DIN 96P, MALE
CN2	1-506-746-11	s	CONNECTOR, DIN 48P, MALE
CN3	1-563-341-11	s	CONNECTOR, DIN 96P, FEMALE

EX-279 BOARD

Ref. No. or Q'ty	Part No.	SP	Description
1pc	A-6754-118-A	s	MOUNTED CIRCUIT BOARD, EX-279
1pc	3-701-623-00	s	BAG, POLY
1pc	7-621-259-65	s	SCREW +P 2.6X10
1pc	7-621-775-20	s	SCREW +B 2.6X5
1pc	7-622-207-05	s	N 2.6, TYPE 2
CN1	1-506-748-11	s	CONNECTOR, DIN 96P, MALE
CN2	1-563-341-11	s	CONNECTOR, DIN 96P, FEMALE

HC-11 BOARD

Ref. No. or Q'ty	Part No.	SP	Description
1pc	1-622-595-11	o	PRINTED CIRCUIT BOARD, HC-11
CN461	1-506-471-11	s	CONNECTOR, 6P, MALE
CP1	1-548-152-11	o	HOUR METER, DIGITAL

NOTE: Please see pages 19-51 and 19-52 for the parts that are not listed in the part list.

HP-33 BOARD

Ref. No. or Q'ty	Part No.	SP	Description
1pc	1-622-590-13	o	PRINTED CIRCUIT BOARD, HP-33
C1	1-130-495-00	s	MYLAR 0.1uF 5% 50V
CN551	1-506-486-11	s	CONNECTOR, 7P, MALE
CN552	1-506-483-21	s	CONNECTOR, 4P, MALE
CN553	1-506-484-11	s	CONNECTOR, 5P, MALE
IC1	8-759-981-85	s	IC RC4556D
IC2	8-759-900-72	s	IC NE5532P
J1	1-507-863-51	s	JACK, PHONE
R6	1-247-739-11	s	CARBON 100 5% 1/2W
R7	1-215-419-00	s	METAL 820 1% 1/6W
R8	1-215-447-00	s	METAL 12K 1% 1/6W
R10	1-247-739-11	s	CARBON 100 5% 1/2W
R12	1-215-419-00	s	METAL 820 1% 1/6W
R13	1-215-447-00	s	METAL 12K 1% 1/6W

KY-188PC BOARD

Ref. No. or Q'ty	Part No.	SP	Description
1pc	A-6754-116-A	o	MOUNTED CIRCUIT BOARD, KY-188PC
6pcs	3-305-651-11	s	RETAINER, LED
4pcs	3-668-124-00	o	HOLDER, LED
C1	1-124-252-00	s	ELECT 0.33uF 20% 50V
C2	1-124-252-00	s	ELECT 0.33uF 20% 50V
C3	1-161-039-00	s	CERAMIC 0.001uF 10% 50V
C4	1-124-472-11	s	ELECT 470uF 20% 10V
C5	1-161-055-00	s	CERAMIC 0.022uF 10% 50V
C6	1-124-472-11	s	ELECT 470uF 20% 10V
C7	1-161-055-00	s	CERAMIC 0.022uF 10% 50V
C8	1-161-055-00	s	CERAMIC 0.022uF 10% 50V
C9	1-161-055-00	s	CERAMIC 0.022uF 10% 50V
C10	1-161-055-00	s	CERAMIC 0.022uF 10% 50V
C11	1-161-055-00	s	CERAMIC 0.022uF 10% 50V
C12	1-161-055-00	s	CERAMIC 0.022uF 10% 50V
C14	1-107-077-00	s	MICA 47PF 5% 50V
C16	1-107-158-00	s	MICA 30PF 5% 500V
C17	1-107-158-00	s	MICA 30PF 5% 500V
C18	1-124-472-11	s	ELECT 470uF 20% 10V
C19	1-124-472-11	s	ELECT 470uF 20% 10V
C44	1-124-252-00	s	ELECT 0.33uF 20% 50V
C45	1-124-472-11	s	ELECT 470uF 20% 10V
CN2	1-506-485-11	s	CONNECTOR, 6P, MALE
D1	8-719-911-19	s	DIODE 1SS119
D2	8-719-911-19	s	DIODE 1SS119
D3	8-719-911-19	s	DIODE 1SS119
D4	8-719-109-51	s	DIODE RD2.0ES-B2
D5	8-719-109-51	s	DIODE RD2.0ES-B2
D6	8-719-109-51	s	DIODE RD2.0ES-B2
D7	8-719-109-51	s	DIODE RD2.0ES-B2
D8	8-719-109-51	s	DIODE RD2.0ES-B2
D9	8-719-109-51	s	DIODE RD2.0ES-B2
D10	8-719-109-51	s	DIODE RD2.0ES-B2
D11	8-719-911-19	s	DIODE 1SS119
D12	8-719-911-19	s	DIODE 1SS119
D13	8-719-911-19	s	DIODE 1SS119
D14	8-719-911-19	s	DIODE 1SS119
D15	8-719-911-19	s	DIODE 1SS119
D16	8-719-911-19	s	DIODE 1SS119
D17	8-719-911-19	s	DIODE 1SS119
D18	8-719-911-19	s	DIODE 1SS119
D19	8-719-911-19	s	DIODE 1SS119
D20	8-719-911-19	s	DIODE 1SS119
D21	8-719-911-19	s	DIODE 1SS119
D22	8-719-911-19	s	DIODE 1SS119
D23	8-719-911-19	s	DIODE 1SS119
D24	8-719-911-19	s	DIODE 1SS119
D25	8-719-911-19	s	DIODE 1SS119
D26	8-719-911-19	s	DIODE 1SS119
D27	8-719-911-19	s	DIODE 1SS119
D28	8-719-911-19	s	DIODE 1SS119
D29	8-719-911-19	s	DIODE 1SS119
D30	8-719-911-19	s	DIODE 1SS119
D31	8-719-911-19	s	DIODE 1SS119
D32	8-719-911-19	s	DIODE 1SS119

NOTE: Please see pages 19-51 and 19-52 for the parts that are not listed in the part list.

(KY-188PC BOARD)

Ref. No. or Q'ty	Part No.	SP	Description
D33	8-719-911-19	s	DIODE 1SS119
D34	8-719-911-19	s	DIODE 1SS119
D35	8-719-911-19	s	DIODE 1SS119
D36	8-719-911-19	s	DIODE 1SS119
D37	8-719-911-19	s	DIODE 1SS119
D38	8-719-911-19	s	DIODE 1SS119
D39	8-719-911-19	s	DIODE 1SS119
D40	8-719-911-19	s	DIODE 1SS119
D41	8-719-911-19	s	DIODE 1SS119
D42	8-719-911-19	s	DIODE 1SS119
D43	8-719-911-19	s	DIODE 1SS119
D44	8-719-911-19	s	DIODE 1SS119
D45	8-719-911-19	s	DIODE 1SS119
D46	8-719-911-19	s	DIODE 1SS119
D47	8-719-911-19	s	DIODE 1SS119
D48	8-719-911-19	s	DIODE 1SS119
D49	8-719-802-11	s	LED TLUG154, GRN
D50	8-719-939-39	s	LED GL5HD8, RED
D51	8-719-939-39	s	LED GL5HD8, RED
D52	8-719-939-39	s	LED GL5HD8, RED
D53	8-719-939-39	s	LED GL5HD8, RED
D55	8-719-939-39	s	LED GL5HD8, RED
D56	8-719-939-39	s	LED GL5HD8, RED
D57	8-719-802-11	s	LED TLUG154, GRN
D58	8-719-939-39	s	LED GL5HD8, RED
D59	8-719-802-11	s	LED TLUG154, GRN
IC1	8-759-632-07	s	IC M5237L
IC2	8-759-982-21	s	IC RC78L05A
IC3	8-759-500-43	s	IC CXD8117P
IC4	8-759-501-52	s	IC M50747H-250SP
IC5	8-759-645-16	s	IC M54516P
IC6	8-759-645-16	s	IC M54516P
IC7	8-759-645-16	s	IC M54516P
IC8	8-759-982-21	s	IC RC78L05A
L1	1-407-488-00	s	INDUCTOR 470uH
L2	1-407-488-00	s	INDUCTOR 470uH
Q2	8-729-275-42	s	TRANSISTOR 2SC2754
Q3	8-729-275-42	s	TRANSISTOR 2SC2754
Q4	8-729-904-51	s	TRANSISTOR DTB123EK
Q5	8-729-904-51	s	TRANSISTOR DTB123EK
Q6	8-729-904-51	s	TRANSISTOR DTB123EK
Q7	8-729-904-51	s	TRANSISTOR DTB123EK
Q8	8-729-904-51	s	TRANSISTOR DTB123EK
Q9	8-729-904-51	s	TRANSISTOR DTB123EK
Q10	8-729-904-51	s	TRANSISTOR DTB123EK
Q12	8-729-205-95	s	TRANSISTOR 2SB822-R
Q13	8-729-205-95	s	TRANSISTOR 2SB822-R
Q14	8-729-205-95	s	TRANSISTOR 2SB822-R
Q15	8-729-205-95	s	TRANSISTOR 2SB822-R
Q16	8-729-205-95	s	TRANSISTOR 2SB822-R
Q17	8-729-205-95	s	TRANSISTOR 2SB822-R
Q18	8-729-205-95	s	TRANSISTOR 2SB822-R
Q19	8-729-205-95	s	TRANSISTOR 2SB822-R
Q20	8-729-900-67	s	TRANSISTOR DTA124XS
Q21	8-729-900-67	s	TRANSISTOR DTA124XS

(KY-188PC BOARD)

Ref. No. or Q'ty	Part No.	SP	Description
Q22	8-729-900-67	s	TRANSISTOR DTA124XS
Q23	8-729-900-67	s	TRANSISTOR DTA124XS
Q24	8-729-900-67	s	TRANSISTOR DTA124XS
Q25	8-729-901-02	s	TRANSISTOR DTC124XK
Q26	8-729-901-02	s	TRANSISTOR DTC124XK
Q27	8-729-900-83	s	TRANSISTOR DTC124XS
Q28	8-729-900-83	s	TRANSISTOR DTC124XS
Q29	8-729-901-02	s	TRANSISTOR DTC124XK
Q30	8-729-901-02	s	TRANSISTOR DTC124XK
Q31	8-729-901-02	s	TRANSISTOR DTC124XK
Q32	8-729-901-02	s	TRANSISTOR DTC124XK
Q33	8-729-900-51	s	TRANSISTOR DTA114TK
Q34	8-729-140-75	s	TRANSISTOR 2SD999-CLCK
Q35	8-729-900-51	s	TRANSISTOR DTA114TK
Q36	8-729-140-75	s	TRANSISTOR 2SD999-CLCK
Q37	8-729-900-51	s	TRANSISTOR DTA114TK
Q38	8-729-140-75	s	TRANSISTOR 2SD999-CLCK
Q39	8-729-900-51	s	TRANSISTOR DTA114TK
Q40	8-729-140-75	s	TRANSISTOR 2SD999-CLCK
Q41	8-729-900-51	s	TRANSISTOR DTA114TK
Q42	8-729-140-75	s	TRANSISTOR 2SD999-CLCK
Q43	8-729-900-51	s	TRANSISTOR DTA114TK
Q44	8-729-140-75	s	TRANSISTOR 2SD999-CLCK
Q45	8-729-900-51	s	TRANSISTOR DTA114TK
Q46	8-729-140-75	s	TRANSISTOR 2SD999-CLCK
Q47	8-729-900-51	s	TRANSISTOR DTA114TK
Q48	8-729-140-75	s	TRANSISTOR 2SD999-CLCK
Q49	8-729-900-51	s	TRANSISTOR DTA114TK
Q50	8-729-140-75	s	TRANSISTOR 2SD999-CLCK
Q51	8-729-900-51	s	TRANSISTOR DTA114TK
Q52	8-729-140-75	s	TRANSISTOR 2SD999-CLCK
Q53	8-729-900-51	s	TRANSISTOR DTA114TK
Q54	8-729-140-75	s	TRANSISTOR 2SD999-CLCK
Q55	8-729-900-51	s	TRANSISTOR DTA114TK
Q56	8-729-140-75	s	TRANSISTOR 2SD999-CLCK
Q57	8-729-900-51	s	TRANSISTOR DTA114TK
Q58	8-729-140-75	s	TRANSISTOR 2SD999-CLCK
Q59	8-729-900-51	s	TRANSISTOR DTA114TK
Q60	8-729-140-75	s	TRANSISTOR 2SD999-CLCK
Q61	8-729-900-51	s	TRANSISTOR DTA114TK
Q62	8-729-140-75	s	TRANSISTOR 2SD999-CLCK
Q63	8-729-900-51	s	TRANSISTOR DTA114TK
Q64	8-729-140-75	s	TRANSISTOR 2SD999-CLCK
Q65	8-729-900-51	s	TRANSISTOR DTA114TK
Q66	8-729-140-75	s	TRANSISTOR 2SD999-CLCK
Q67	8-729-900-51	s	TRANSISTOR DTA114TK
Q68	8-729-140-75	s	TRANSISTOR 2SD999-CLCK
Q69	8-729-900-51	s	TRANSISTOR DTA114TK
Q70	8-729-140-75	s	TRANSISTOR 2SD999-CLCK
Q71	8-729-900-51	s	TRANSISTOR DTA114TK
Q72	8-729-140-75	s	TRANSISTOR 2SD999-CLCK
Q73	8-729-900-51	s	TRANSISTOR DTA114TK
Q74	8-729-140-75	s	TRANSISTOR 2SD999-CLCK
Q75	8-729-900-51	s	TRANSISTOR DTA114TK
Q76	8-729-140-75	s	TRANSISTOR 2SD999-CLCK
Q77	8-729-900-51	s	TRANSISTOR DTA114TK

NOTE: Please see pages 19-51 and 19-52 for the parts that are not listed in the part list.

(KY-188PC BOARD)

Ref. No. or Q'ty	Part No.	SP	Description
Q78	8-729-140-75	s	TRANSISTOR 2SD999-CLCK
Q79	8-729-900-51	s	TRANSISTOR DTA114TK
Q80	8-729-140-75	s	TRANSISTOR 2SD999-CLCK
Q81	8-729-119-78	s	TRANSISTOR 2SC2785-HFE
Q82	8-729-119-78	s	TRANSISTOR 2SC2785-HFE
Q83	8-729-900-51	s	TRANSISTOR DTA114TK
Q84	8-729-140-75	s	TRANSISTOR 2SD999-CLCK
Q85	8-729-900-51	s	TRANSISTOR DTA114TK
Q86	8-729-140-75	s	TRANSISTOR 2SD999-CLCK
Q87	8-729-900-51	s	TRANSISTOR DTA114TK
Q88	8-729-140-75	s	TRANSISTOR 2SD999-CLCK
R2	1-217-666-31	s	RES, SHORTING 0.01 1/6W
R15	1-249-435-11	s	CARBON 33K 5% 1/4W
R16	1-249-427-11	s	CARBON 6.8K 5% 1/4W
R172	1-249-426-11	s	CARBON 5.6K 5% 1/4W
S1	1-571-169-11	s	SWITCH, WITH LED, TACTILE
S2	1-571-169-21	s	SWITCH, WITH LED, TACTILE
S3	1-571-167-41	s	SWITCH, WITH LED, TACTILE
S4	1-571-167-31	s	SWITCH, WITH LED, TACTILE
S5	1-571-167-21	s	SWITCH, WITH LED, TACTILE
S6	1-571-167-11	s	SWITCH, WITH LED, TACTILE
S7	1-571-167-11	s	SWITCH, WITH LED, TACTILE
S8	1-571-168-21	s	SWITCH, WITH LED, TACTILE
S9	1-571-167-11	s	SWITCH, WITH LED, TACTILE
S10	1-571-280-11	s	SWITCH, PUSH, WITH LED
S11	1-571-280-11	s	SWITCH, PUSH, WITH LED
S12	1-571-280-11	s	SWITCH, PUSH, WITH LED
S13	1-571-280-11	s	SWITCH, PUSH, WITH LED
S14	1-571-280-11	s	SWITCH, PUSH, WITH LED
S15	1-571-280-11	s	SWITCH, PUSH, WITH LED
S16	1-571-167-11	s	SWITCH, WITH LED, TACTILE
S17	1-571-167-11	s	SWITCH, WITH LED, TACTILE
S18	1-571-168-11	s	SWITCH, WITH LED, TACTILE
S19	1-571-167-11	s	SWITCH, WITH LED, TACTILE
S20	1-516-995-00	s	SWITCH, LEVER SLIDE
S21	1-571-280-11	s	SWITCH, PUSH, WITH LED
S22	1-571-280-11	s	SWITCH, PUSH, WITH LED
S23	1-571-280-11	s	SWITCH, PUSH, WITH LED
S24	1-571-280-11	s	SWITCH, PUSH, WITH LED
S25	1-571-280-11	s	SWITCH, PUSH, WITH LED
S26	1-516-995-00	s	SWITCH, LEVER SLIDE
S27	1-516-961-00	s	SWITCH, LEVER SLIDE
S28	1-516-961-00	s	SWITCH, LEVER SLIDE
S40	1-571-280-11	s	SWITCH, PUSH, WITH LED
S41	1-571-280-11	s	SWITCH, PUSH, WITH LED
X1	1-567-869-11	s	RESONATOR, CERAMIC 9.83MHz

KY-205 BOARD

Ref. No. or Q'ty	Part No.	SP	Description
1pc	1-634-411-11	o	PRINTED CIRCUIT BOARD, KY-205
CN4	1-535-699-11	o	CABLE, JUMPER 23P
S32	1-552-539-00	s	SWITCH, TACTILE
S33	1-552-539-00	s	SWITCH, TACTILE
S34	1-552-539-00	s	SWITCH, TACTILE

KY-206 BOARD

Ref. No. or Q'ty	Part No.	SP	Description
1pc	1-634-412-11	o	PRINTED CIRCUIT BOARD, KY-206
CN5	1-535-699-11	o	CABLE, JUMPER 23P
D54	8-719-800-94	s	LED TLUR144, RED
S35	1-552-539-00	s	SWITCH, TACTILE
S36	1-552-539-00	s	SWITCH, TACTILE
S37	1-552-539-00	s	SWITCH, TACTILE
S38	1-552-539-00	s	SWITCH, TACTILE

NOTE: Please see pages 19-51 and 19-52 for the parts that are not listed in the part list.

MB-331 BOARD

Ref. No. or Q'ty	Part No.	SP	Description
1pc	A-6725-872-A	o	MOUNTED CIRCUIT BOARD, MB-331
1pc	1-562-210-11	s	CONTACT, FEMALE AWG18-22
1pc	3-717-480-03	o	BRACKET (LR), MB
1pc	3-717-491-04	o	BRACKET (LF), MB
14pcs	7-621-759-45	s	+PSW, 2.6X6
CN101	1-565-910-11	o	CONNECTOR, DIN 96P, FEMALE
CN102	1-565-910-11	o	CONNECTOR, DIN 96P, FEMALE
CN103	1-565-910-11	o	CONNECTOR, DIN 96P, FEMALE
CN104	1-565-910-11	o	CONNECTOR, DIN 96P, FEMALE
CN105	1-565-910-11	o	CONNECTOR, DIN 96P, FEMALE
CN106	1-565-909-11	o	CONNECTOR, DIN 48P, FEMALE
CN107	1-565-910-11	o	CONNECTOR, DIN 96P, FEMALE
CN108	1-565-909-11	o	CONNECTOR, DIN 48P, FEMALE
CN109	1-565-910-11	o	CONNECTOR, DIN 96P, FEMALE
CN110	1-565-909-11	o	CONNECTOR, DIN 48P, FEMALE
CN111	1-565-910-11	o	CONNECTOR, DIN 96P, FEMALE
CN112	1-565-909-11	o	CONNECTOR, DIN 48P, FEMALE
CN113	1-565-910-11	o	CONNECTOR, DIN 96P, FEMALE
CN114	1-506-468-11	s	CONNECTOR, 3P, MALE
CN115	1-506-468-11	s	CONNECTOR, 3P, MALE
CN116	1-506-468-11	s	CONNECTOR, 3P, MALE
CN117	1-506-468-11	s	CONNECTOR, 3P, MALE
CN118	1-506-468-11	s	CONNECTOR, 3P, MALE
CN119	1-506-468-11	s	CONNECTOR, 3P, MALE
CN120	1-506-471-11	s	CONNECTOR, 6P, MALE
CN121	1-506-471-11	s	CONNECTOR, 6P, MALE
CN122	1-506-481-11	s	CONNECTOR, 2P, MALE
CN123	1-566-342-11	s	CONNECTOR, 30P, MALE
CN124	1-506-489-11	s	CONNECTOR, 10P, MALE
CN125	1-566-394-21	o	CONNECTOR, 8P, MALE
CN126	1-506-485-11	s	CONNECTOR, 6P, MALE
CN127	1-506-483-21	s	CONNECTOR, 4P, MALE
CN128	1-506-483-21	s	CONNECTOR, 4P, MALE
CN129	1-506-469-11	s	CONNECTOR, 4P, MALE
CN130	1-506-478-11	s	CONNECTOR, 13P, MALE
CN131	1-506-473-11	s	CONNECTOR, 8P, MALE
CN132	1-506-470-11	s	CONNECTOR, 5P, MALE
CN133	1-506-468-11	s	CONNECTOR, 3P, MALE
CN134	1-506-468-11	s	CONNECTOR, 3P, MALE
CN136	1-506-483-21	s	CONNECTOR, 4P, MALE
CN137	1-566-398-21	o	CONNECTOR, 16P, MALE
CN138	1-506-481-11	s	CONNECTOR, 2P, MALE
CN139	1-506-483-21	s	CONNECTOR, 4P, MALE
CN140	1-506-481-11	s	CONNECTOR, 2P, MALE
CN141	1-566-394-21	o	CONNECTOR, 8P, MALE
CN142	1-506-468-11	s	CONNECTOR, 3P, MALE
CN143	1-566-396-21	o	CONNECTOR, 12P, MALE
CN202	1-565-910-11	o	CONNECTOR, DIN 96P, FEMALE
CN203	1-565-910-11	o	CONNECTOR, DIN 96P, FEMALE
CN204	1-565-910-11	o	CONNECTOR, DIN 96P, FEMALE
CN205	1-565-910-11	o	CONNECTOR, DIN 96P, FEMALE
CN206	1-565-910-11	o	CONNECTOR, DIN 96P, FEMALE
CN207	1-565-910-11	o	CONNECTOR, DIN 96P, FEMALE
CN208	1-565-910-11	o	CONNECTOR, DIN 96P, FEMALE
CN209	1-565-910-11	o	CONNECTOR, DIN 96P, FEMALE
CN210	1-565-910-11	o	CONNECTOR, DIN 96P, FEMALE

(MB-331 BOARD)

Ref. No. or Q'ty	Part No.	SP	Description
CN211	1-566-312-11	s	CONNECTOR, 50P, MALE
CN212	1-566-312-11	s	CONNECTOR, 50P, MALE
CN213	1-564-722-11	o	CONNECTOR, 6P, MALE
CN214	1-564-726-11	o	CONNECTOR, 10P, MALE
CN215	1-566-405-11	o	CONNECTOR, 30P, MALE
CN216	1-506-468-11	s	CONNECTOR, 3P, MALE
CN217	1-506-468-11	s	CONNECTOR, 3P, MALE
CN218	1-506-475-11	s	CONNECTOR, 10P, MALE
CN219	1-506-468-11	s	CONNECTOR, 3P, MALE
CN220	1-506-471-11	s	CONNECTOR, 6P, MALE
CN221	1-506-471-11	s	CONNECTOR, 6P, MALE
CN222	1-506-470-11	s	CONNECTOR, 5P, MALE
CN223	1-506-470-11	s	CONNECTOR, 5P, MALE
CN225	1-566-405-11	o	CONNECTOR, 30P, MALE
CN226	1-506-477-11	s	CONNECTOR, 12P, MALE
CN227	1-506-469-11	s	CONNECTOR, 4P, MALE
CN228	1-506-473-11	s	CONNECTOR, 8P, MALE
CN229	1-506-473-11	s	CONNECTOR, 8P, MALE
CN230	1-506-477-11	s	CONNECTOR, 12P, MALE
CN231	1-506-477-11	s	CONNECTOR, 12P, MALE
CN232	1-506-482-11	s	CONNECTOR, 3P, MALE
CN233	1-506-484-11	s	CONNECTOR, 5P, MALE
CN234	1-506-469-11	s	CONNECTOR, 4P, MALE
CN235	1-506-483-21	s	CONNECTOR, 4P, MALE
CN236	1-566-396-21	o	CONNECTOR, 12P, MALE
CN237	1-566-405-21	o	CONNECTOR, 30P, MALE
CN431	1-562-833-11	o	HOUSING, 7P
CN432	1-562-800-11	o	HOUSING, 9P

NOTE: Please see pages 19-51 and 19-52 for the parts that are not listed in the part list.

MB-332 BOARD

Ref. No. or Q'ty	Part No.	SP	Description
1pc	A-6725-871-A	o	MOUNTED CIRCUIT BOARD, MB-332
1pc	3-717-468-01	o	JOINT, CONNECTOR
3pcs	7-621-759-45	s	+PSW, 2.6X6
CN301	1-565-910-11	o	CONNECTOR, DIN 96P, FEMALE
CN302	1-565-910-11	o	CONNECTOR, DIN 96P, FEMALE
CN303	1-565-910-11	o	CONNECTOR, DIN 96P, FEMALE
CN304	1-565-910-11	o	CONNECTOR, DIN 96P, FEMALE
CN306	1-566-343-11	o	CONNECTOR, 40P, MALE
CN307	1-566-496-11	o	CONNECTOR, 50P, MALE
CN308	1-566-496-11	o	CONNECTOR, 50P, MALE
CN309	1-506-475-11	s	CONNECTOR, 10P, MALE
CN310	1-566-311-11	s	CONNECTOR, 10P, MALE
CN311	1-506-477-11	s	CONNECTOR, 12P, MALE
CN312	1-506-471-11	s	CONNECTOR, 6P, MALE
CN313	1-506-467-11	s	CONNECTOR, 2P, MALE
CN314	1-506-471-11	s	CONNECTOR, 6P, MALE
CN315	1-506-477-11	s	CONNECTOR, 12P, MALE
CN316	1-508-906-00	o	CONNECTOR, 10P, MALE
CN317	1-506-473-11	s	CONNECTOR, 8P, MALE
CN318	1-506-468-11	s	CONNECTOR, 3P, MALE
CN319	1-506-470-11	s	CONNECTOR, 5P, MALE
CN320	1-506-473-11	s	CONNECTOR, 8P, MALE

MD-46P BOARD

Ref. No. or Q'ty	Part No.	SP	Description
1pc	A-6711-893-A	o	MOUNTED CIRCUIT BOARD, MD-46P
1pc	1-218-182-11	s	METAL, CHIP 270 0.1% 1/16W
1pc	1-218-183-11	s	METAL, CHIP 297 0.1% 1/16W
1pc	1-218-184-11	s	METAL, CHIP 997 0.1% 1/16W
1pc	1-218-185-11	s	METAL, CHIP 999 0.1% 1/16W
1pc	3-531-576-11	s	RIVET
2pcs	7-622-207-05	s	N 2.6, TYPE 2
2pcs	7-628-254-30	s	SCREW +PS 2.6X10
C1	1-124-443-00	s	ELECT 100uF 20% 10V
C3	1-124-442-00	s	ELECT 330uF 20% 6.3V
C5	1-124-442-00	s	ELECT 330uF 20% 6.3V
C7	1-124-604-00	s	ELECT 330uF 20% 10V
C8	1-163-136-00	s	CERAMIC, CHIP 620PF 5% 50V
C9	1-163-096-00	s	CERAMIC, CHIP 13PF 5% 50V
C14	1-126-154-11	s	ELECT 47uF 20% 6.3V
C30	1-124-443-00	s	ELECT 100uF 20% 10V
C31	1-124-443-00	s	ELECT 100uF 20% 10V
C37	1-107-049-00	s	MICA 8.2PF 500V
C40	1-107-049-00	s	MICA 8.2PF 500V
C42	1-124-443-00	s	ELECT 100uF 20% 10V
C45	1-126-154-11	s	ELECT 47uF 20% 6.3V
C47	1-124-443-00	s	ELECT 100uF 20% 10V
C49	1-124-443-00	s	ELECT 100uF 20% 10V
C52	1-124-443-00	s	ELECT 100uF 20% 10V
C55	1-124-443-00	s	ELECT 100uF 20% 10V
C75	1-124-443-00	s	ELECT 100uF 20% 10V
C80	1-124-443-00	s	ELECT 100uF 20% 10V
C82	1-124-443-00	s	ELECT 100uF 20% 10V
C83	1-124-443-00	s	ELECT 100uF 20% 10V
C85	1-124-442-00	s	ELECT 330uF 20% 6.3V
C87	1-124-442-00	s	ELECT 330uF 20% 6.3V
C89	1-124-604-00	s	ELECT 330uF 20% 10V
C94	1-124-443-00	s	ELECT 100uF 20% 10V
C99	1-124-443-00	s	ELECT 100uF 20% 10V
C100	1-126-154-11	s	ELECT 47uF 20% 6.3V
C104	1-124-443-00	s	ELECT 100uF 20% 10V
C116	1-124-443-00	s	ELECT 100uF 20% 10V
C127	1-124-443-00	s	ELECT 100uF 20% 10V
C131	1-124-443-00	s	ELECT 100uF 20% 10V
C134	1-124-443-00	s	ELECT 100uF 20% 10V
C136	1-126-154-11	s	ELECT 47uF 20% 6.3V
C138	1-124-443-00	s	ELECT 100uF 20% 10V
C139	1-124-443-00	s	ELECT 100uF 20% 10V
C200	1-126-154-11	s	ELECT 47uF 20% 6.3V
C201	1-124-446-11	s	ELECT 47uF 20% 10V
C206	1-124-471-00	s	ELECT 1000uF 20% 6.3V
C207	1-124-471-00	s	ELECT 1000uF 20% 6.3V
C208	1-124-472-11	s	ELECT 470uF 20% 10V
C209	1-126-103-11	s	ELECT 470uF 20% 16V
C210	1-126-176-11	s	ELECT 220uF 20% 10V
C211	1-126-176-11	s	ELECT 220uF 20% 10V
C214	1-126-103-11	s	ELECT 470uF 20% 16V
C223	1-124-638-11	s	ELECT 22uF 20% 10V
C231	1-124-638-11	s	ELECT 22uF 20% 10V
C246	1-126-176-11	s	ELECT 220uF 20% 10V
C259	1-163-111-00	s	CERAMIC, CHIP 56PF 5% 50V

NOTE: Please see pages 19-51 and 19-52 for the parts that are not listed in the part list.

(MD-46P BOARD)

Ref. No. or Q'ty	Part No.	SP	Description
C260	1-163-108-00	s	CERAMIC, CHIP 43PF 5% 50V
C269	1-163-095-00	s	CERAMIC, CHIP 12PF 5% 50V
C287	1-163-098-00	s	CERAMIC, CHIP 16PF 5% 50V
C296	1-162-890-11	s	CERAMIC 820PF 5% 50V
C297	1-130-479-00	s	MYLAR 0.0047uF 5% 50V
C301	1-162-890-11	s	CERAMIC 820PF 5% 50V
C303	1-130-491-00	s	MYLAR 0.047uF 5% 50V
C305	1-126-154-11	s	ELECT 47uF 20% 6.3V
C306	1-124-443-00	s	ELECT 100uF 20% 10V
C308	1-124-443-00	s	ELECT 100uF 20% 10V
C402	1-107-043-00	s	MICA 2.7PF 500V
C403	1-130-471-00	s	MYLAR 0.001uF 5% 50V
C404	1-130-471-00	s	MYLAR 0.001uF 5% 50V
C405	1-130-471-00	s	MYLAR 0.001uF 5% 50V
C406	1-130-475-00	s	MYLAR 0.0022uF 5% 50V
C409	1-124-443-00	s	ELECT 100uF 20% 10V
C501	1-162-890-11	s	CERAMIC 820PF 5% 50V
#C507	1-163-113-00	s	CERAMIC, CHIP 68PF 5% 50V
CN104	1-506-748-11	s	CONNECTOR, DIN 96P, MALE
#CV506	1-141-297-11	s	CAP, TRIMMER 90PF
#CV507	1-141-297-11	s	CAP, TRIMMER 90PF
D1	8-719-110-03	s	DIODE RD7.5ES-B2
D2	8-719-800-76	s	DIODE 1SS226
D4	8-719-800-76	s	DIODE 1SS226
D5	8-719-800-76	s	DIODE 1SS226
D6	8-719-800-76	s	DIODE 1SS226
D7	8-719-800-76	s	DIODE 1SS226
D9	8-719-800-76	s	DIODE 1SS226
FB1	1-535-178-00	s	BEAD, FERRITE
FB2	1-535-178-00	s	BEAD, FERRITE
FB3	1-535-178-00	s	BEAD, FERRITE
FB4	1-535-178-00	s	BEAD, FERRITE
FB100	1-535-178-00	s	BEAD, FERRITE
FB101	1-535-178-00	s	BEAD, FERRITE
FB102	1-535-178-00	s	BEAD, FERRITE
FB103	1-535-178-00	s	BEAD, FERRITE
FL1	1-236-067-12	s	FILTER, CR
FL2	1-236-068-12	s	FILTER, CR
FL3	1-236-387-11	s	FILTER, LOW-PASS
FL4	1-236-387-11	s	FILTER, LOW-PASS
IC1	8-752-030-81	s	IC CXA1040M
IC2	8-741-158-90	s	IC SBX1589-01
IC3	8-752-030-82	s	IC CXA1041M
IC4	8-752-015-81	s	IC CX20158
IC6	8-759-907-81	s	IC SN74LS221NS
IC7	8-752-030-81	s	IC CXA1040M
IC8	8-741-158-90	s	IC SBX1589-01
IC9	8-752-030-82	s	IC CXA1041M
IC13	8-759-907-81	s	IC SN74LS221NS
IC14	8-759-982-34	s	IC RC78M09FA
IC15	8-759-982-31	s	IC RC78M05FA
IC16	8-759-982-38	s	IC UPC7905H
IC18	8-759-927-46	s	IC SN74HC00NS
IC20	8-759-925-76	s	IC SN74HC08NS

(MD-46P BOARD)

Ref. No. or Q'ty	Part No.	SP	Description
IC21	8-752-015-81	s	IC CX20158
IC22	8-752-015-81	s	IC CX20158
IC25	8-759-908-15	s	IC TL431CLP
IC26	8-759-908-15	s	IC TL431CLP
IC27	8-759-908-15	s	IC TL431CLP
IC28	8-759-908-15	s	IC TL431CLP
IC30	8-759-908-15	s	IC TL431CLP
IC31	8-759-908-15	s	IC TL431CLP
IC32	8-752-006-12	s	IC CX20061
IC33	8-752-006-12	s	IC CX20061
IC34	8-752-006-12	s	IC CX20061
IC35	8-752-006-12	s	IC CX20061
IC36	8-759-012-84	s	IC MC14557BF
IC37	8-759-907-81	s	IC SN74LS221NS
IC38	8-759-907-81	s	IC SN74LS221NS
IC39	8-759-907-81	s	IC SN74LS221NS
L32	1-410-476-11	s	INDUCTOR 33uH
L36	1-408-422-00	s	INDUCTOR 120uH
L46	1-410-476-11	s	INDUCTOR 33uH
L48	1-410-476-11	s	INDUCTOR 33uH
L100	1-459-155-00	s	COIL 45uH
L101	1-459-155-00	s	COIL 45uH
L102	1-459-155-00	s	COIL 45uH
L103	1-459-155-00	s	COIL 45uH
L301	1-408-425-00	s	INDUCTOR 220uH
L501	1-408-406-00	s	INDUCTOR 5.6uH
L502	1-408-406-00	s	INDUCTOR 5.6uH
Q1	8-729-201-27	s	TRANSISTOR 2SC2715-Y
Q4	8-729-202-38	s	TRANSISTOR 2SC3326N
Q5	8-729-122-63	s	TRANSISTOR 2SA1226
Q6	8-729-122-63	s	TRANSISTOR 2SA1226
Q7	8-729-122-63	s	TRANSISTOR 2SA1226
Q8	8-729-201-27	s	TRANSISTOR 2SC2715-Y
Q9	8-729-102-07	s	TRANSISTOR 2SC2223-F13
Q10	8-729-102-07	s	TRANSISTOR 2SC2223-F13
Q11	8-729-102-07	s	TRANSISTOR 2SC2223-F13
Q13	8-729-201-27	s	TRANSISTOR 2SC2715-Y
Q16	8-729-202-38	s	TRANSISTOR 2SC3326N
Q17	8-729-122-63	s	TRANSISTOR 2SA1226
Q18	8-729-122-63	s	TRANSISTOR 2SA1226
Q19	8-729-122-63	s	TRANSISTOR 2SA1226
Q20	8-729-201-27	s	TRANSISTOR 2SC2715-Y
Q21	8-729-102-07	s	TRANSISTOR 2SC2223-F13
Q22	8-729-102-07	s	TRANSISTOR 2SC2223-F13
Q23	8-729-102-07	s	TRANSISTOR 2SC2223-F13
Q24	8-729-201-27	s	TRANSISTOR 2SC2715-Y
Q25	8-729-201-27	s	TRANSISTOR 2SC2715-Y
Q26	8-729-201-27	s	TRANSISTOR 2SC2715-Y
Q27	8-729-201-27	s	TRANSISTOR 2SC2715-Y
Q28	8-729-201-27	s	TRANSISTOR 2SC2715-Y
Q29	8-729-102-07	s	TRANSISTOR 2SC2223-F13
Q30	8-729-102-07	s	TRANSISTOR 2SC2223-F13
Q31	8-729-201-27	s	TRANSISTOR 2SC2715-Y
Q32	8-729-201-27	s	TRANSISTOR 2SC2715-Y
Q33	8-729-201-27	s	TRANSISTOR 2SC2715-Y

NOTE: Please see pages 19-51 and 19-52 for the parts that are not listed in the part list.

(MD-46P BOARD)

Ref. No. or Q'ty	Part No.	SP	Description
Q35	8-729-900-53	s	TRANSISTOR DTC114EK
Q36	8-729-900-53	s	TRANSISTOR DTC114EK
Q38	8-729-900-53	s	TRANSISTOR DTC114EK
Q39	8-729-900-53	s	TRANSISTOR DTC114EK
Q41	8-729-109-44	s	TRANSISTOR 2SK94
Q42	8-729-109-44	s	TRANSISTOR 2SK94
Q43	8-729-102-07	s	TRANSISTOR 2SC2223-F13
Q44	8-729-122-63	s	TRANSISTOR 2SA1226
Q45	8-729-102-07	s	TRANSISTOR 2SC2223-F13
Q46	8-729-122-63	s	TRANSISTOR 2SA1226
Q47	8-729-201-27	s	TRANSISTOR 2SC2715-Y
Q48	8-729-201-27	s	TRANSISTOR 2SC2715-Y
Q50	8-729-900-53	s	TRANSISTOR DTC114EK
Q51	8-729-201-27	s	TRANSISTOR 2SC2715-Y
Q54	8-729-122-63	s	TRANSISTOR 2SA1226
Q55	8-729-201-27	s	TRANSISTOR 2SC2715-Y
Q56	8-729-202-38	s	TRANSISTOR 2SC3326N
Q57	8-729-202-38	s	TRANSISTOR 2SC3326N
Q58	8-729-201-27	s	TRANSISTOR 2SC2715-Y
Q59	8-729-201-27	s	TRANSISTOR 2SC2715-Y
Q60	8-729-202-38	s	TRANSISTOR 2SC3326N
Q61	8-729-122-63	s	TRANSISTOR 2SA1226
Q62	8-729-201-27	s	TRANSISTOR 2SC2715-Y
Q63	8-729-201-27	s	TRANSISTOR 2SC2715-Y
Q64	8-729-202-38	s	TRANSISTOR 2SC3326N
Q65	8-729-900-53	s	TRANSISTOR DTC114EK
Q66	8-729-900-53	s	TRANSISTOR DTC114EK
Q67	8-729-900-53	s	TRANSISTOR DTC114EK
Q68	8-729-900-53	s	TRANSISTOR DTC114EK
Q501	8-729-122-63	s	TRANSISTOR 2SA1226
R1	1-216-638-11	s	METAL, CHIP 300 0.5% 1/10W
R2	1-216-627-11	s	METAL, CHIP 100 0.5% 1/10W
R3	1-216-657-11	s	METAL, CHIP 1.8K 0.5% 1/10W
R6	1-216-619-11	s	METAL, CHIP 47 0.5% 1/10W
R7	1-216-666-11	s	METAL, CHIP 4.3K 0.5% 1/10W
R8	1-216-662-11	s	METAL, CHIP 3K 0.5% 1/10W
R10	1-216-655-11	s	METAL, CHIP 1.5K 0.5% 1/10W
R11	1-216-644-11	s	METAL, CHIP 510 0.5% 1/10W
R13	1-216-684-11	s	METAL, CHIP 24K 0.5% 1/10W
R15	1-216-683-11	s	METAL, CHIP 22K 0.5% 1/10W
R19	1-216-659-11	s	METAL, CHIP 2.2K 0.5% 1/10W
R20	1-216-667-11	s	METAL, CHIP 4.7K 0.5% 1/10W
R28	1-216-651-11	s	METAL, CHIP 1K 0.5% 1/10W
R29	1-216-650-11	s	METAL, CHIP 910 0.5% 1/10W
R30	1-216-650-11	s	METAL, CHIP 910 0.5% 1/10W
R31	1-216-665-11	s	METAL, CHIP 3.9K 0.5% 1/10W
R33	1-216-651-11	s	METAL, CHIP 1K 0.5% 1/10W
R39	1-216-621-11	s	METAL 56 0.5% 1/10W
R42	1-216-621-11	s	METAL 56 0.5% 1/10W
R46	1-216-651-11	s	METAL, CHIP 1K 0.5% 1/10W
R48	1-216-651-11	s	METAL, CHIP 1K 0.5% 1/10W
R64	1-216-651-11	s	METAL, CHIP 1K 0.5% 1/10W
R65	1-216-651-11	s	METAL, CHIP 1K 0.5% 1/10W
R71	1-216-638-11	s	METAL, CHIP 300 0.5% 1/10W
R72	1-216-627-11	s	METAL, CHIP 100 0.5% 1/10W
R73	1-216-657-11	s	METAL, CHIP 1.8K 0.5% 1/10W

(MD-46P BOARD)

Ref. No. or Q'ty	Part No.	SP	Description
R82	1-216-684-11	s	METAL, CHIP 24K 0.5% 1/10W
R83	1-216-683-11	s	METAL, CHIP 22K 0.5% 1/10W
R88	1-216-685-11	s	METAL, CHIP 27K 0.5% 1/10W
R89	1-216-667-11	s	METAL, CHIP 4.7K 0.5% 1/10W
R96	1-216-651-11	s	METAL, CHIP 1K 0.5% 1/10W
R97	1-216-650-11	s	METAL, CHIP 910 0.5% 1/10W
R98	1-216-650-11	s	METAL, CHIP 910 0.5% 1/10W
R99	1-216-669-11	s	METAL, CHIP 5.6K 0.5% 1/10W
R105	1-216-621-11	s	METAL 56 0.5% 1/10W
R110	1-247-729-11	s	CARBON 15 5% 1/2W
R113	1-216-651-11	s	METAL, CHIP 1K 0.5% 1/10W
R122	1-216-658-11	s	METAL, CHIP 2K 0.5% 1/10W
R202	1-216-675-11	s	METAL, CHIP 10K 0.5% 1/10W
R203	1-216-675-11	s	METAL, CHIP 10K 0.5% 1/10W
R204	1-216-691-11	s	METAL, CHIP 47K 0.5% 1/10W
R205	1-216-643-11	s	METAL, CHIP 470 0.5% 1/10W
R206	1-216-672-11	s	METAL, CHIP 7.5K 0.5% 1/10W
R211	1-216-669-11	s	METAL, CHIP 5.6K 0.5% 1/10W
R213	1-216-687-11	s	METAL, CHIP 33K 0.5% 1/10W
R217	1-216-643-11	s	METAL, CHIP 470 0.5% 1/10W
R219	1-216-691-11	s	METAL, CHIP 47K 0.5% 1/10W
R220	1-216-672-11	s	METAL, CHIP 7.5K 0.5% 1/10W
R221	1-216-669-11	s	METAL, CHIP 5.6K 0.5% 1/10W
R228	1-216-691-11	s	METAL, CHIP 47K 0.5% 1/10W
R230	1-216-655-11	s	METAL, CHIP 1.5K 0.5% 1/10W
R233	1-216-691-11	s	METAL, CHIP 47K 0.5% 1/10W
R235	1-216-655-11	s	METAL, CHIP 1.5K 0.5% 1/10W
R236	1-216-675-11	s	METAL, CHIP 10K 0.5% 1/10W
R247	1-216-644-11	s	METAL, CHIP 510 0.5% 1/10W
R250	1-216-673-11	s	METAL, CHIP 8.2K 0.5% 1/10W
R251	1-216-643-11	s	METAL, CHIP 470 0.5% 1/10W
R252	1-216-643-11	s	METAL, CHIP 470 0.5% 1/10W
R253	1-247-697-11	s	CARBON 56 5% 1/4W
R254	1-216-675-11	s	METAL, CHIP 10K 0.5% 1/10W
R256	1-216-635-11	s	METAL, CHIP 220 0.5% 1/10W
R257	1-216-665-11	s	METAL, CHIP 3.9K 0.5% 1/10W
R259	1-216-639-11	s	METAL, CHIP 330 0.5% 1/10W
R260	1-216-639-11	s	METAL, CHIP 330 0.5% 1/10W
R261	1-247-697-11	s	CARBON 56 5% 1/4W
R262	1-216-675-11	s	METAL, CHIP 10K 0.5% 1/10W
R263	1-216-665-11	s	METAL, CHIP 3.9K 0.5% 1/10W
R264	1-247-697-11	s	CARBON 56 5% 1/4W
R265	1-216-675-11	s	METAL, CHIP 10K 0.5% 1/10W
R266	1-216-639-11	s	METAL, CHIP 330 0.5% 1/10W
R267	1-216-665-11	s	METAL, CHIP 3.9K 0.5% 1/10W
R268	1-247-697-11	s	CARBON 56 5% 1/4W
R269	1-216-675-11	s	METAL, CHIP 10K 0.5% 1/10W
R270	1-216-665-11	s	METAL, CHIP 3.9K 0.5% 1/10W
R271	1-247-697-11	s	CARBON 56 5% 1/4W
R272	1-216-675-11	s	METAL, CHIP 10K 0.5% 1/10W
R273	1-216-675-11	s	METAL, CHIP 10K 0.5% 1/10W
R274	1-247-697-11	s	CARBON 56 5% 1/4W
R275	1-216-675-11	s	METAL, CHIP 10K 0.5% 1/10W
R276	1-216-675-11	s	METAL, CHIP 10K 0.5% 1/10W
R281	1-216-651-11	s	METAL, CHIP 1K 0.5% 1/10W
R287	1-216-651-11	s	METAL, CHIP 1K 0.5% 1/10W

NOTE: Please see pages 19-51 and 19-52 for the parts that are not listed in the part list.

(MD-46P BOARD)

Ref. No. or Q'ty	Part No.	SP	Description
R295	1-216-677-11	s	METAL, CHIP 12K 0.5% 1/10W
R297	1-216-683-11	s	METAL, CHIP 22K 0.5% 1/10W
R299	1-216-639-11	s	METAL, CHIP 330 0.5% 1/10W
R300	1-216-639-11	s	METAL, CHIP 330 0.5% 1/10W
R302	1-216-644-11	s	METAL, CHIP 510 0.5% 1/10W
R303	1-216-646-11	s	METAL, CHIP 620 0.5% 1/10W
R305	1-216-653-11	s	METAL, CHIP 1.2K 0.5% 1/10W
R307	1-216-621-11	s	METAL 56 0.5% 1/10W
R309	1-216-644-11	s	METAL, CHIP 510 0.5% 1/10W
R311	1-216-629-11	s	METAL, CHIP 120 0.5% 1/10W
R312	1-216-629-11	s	METAL, CHIP 120 0.5% 1/10W
R315	1-216-651-11	s	METAL, CHIP 1K 0.5% 1/10W
R316	1-216-651-11	s	METAL, CHIP 1K 0.5% 1/10W
R321	1-216-667-11	s	METAL, CHIP 4.7K 0.5% 1/10W
R324	1-216-667-11	s	METAL, CHIP 4.7K 0.5% 1/10W
R325	1-216-629-11	s	METAL, CHIP 120 0.5% 1/10W
R326	1-216-629-11	s	METAL, CHIP 120 0.5% 1/10W
R334	1-216-687-11	s	METAL, CHIP 33K 0.5% 1/10W
R335	1-216-675-11	s	METAL, CHIP 10K 0.5% 1/10W
R346	1-216-666-11	s	METAL, CHIP 4.3K 0.5% 1/10W
R347	1-216-666-11	s	METAL, CHIP 4.3K 0.5% 1/10W
R348	1-216-666-11	s	METAL, CHIP 4.3K 0.5% 1/10W
R349	1-216-666-11	s	METAL, CHIP 4.3K 0.5% 1/10W
R350	1-216-671-11	s	METAL, CHIP 6.8K 0.5% 1/10W
R362	1-216-658-11	s	METAL, CHIP 2K 0.5% 1/10W
R406	1-216-649-11	s	METAL, CHIP 820 0.5% 1/10W
R407	1-216-649-11	s	METAL, CHIP 820 0.5% 1/10W
R408	1-216-679-11	s	METAL, CHIP 15K 0.5% 1/10W
R409	1-216-687-11	s	METAL, CHIP 33K 0.5% 1/10W
R412	1-216-640-11	s	METAL, CHIP 360 0.5% 1/10W
R413	1-216-640-11	s	METAL, CHIP 360 0.5% 1/10W
R416	1-216-651-11	s	METAL, CHIP 1K 0.5% 1/10W
R417	1-216-662-11	s	METAL, CHIP 3K 0.5% 1/10W
R418	1-216-662-11	s	METAL, CHIP 3K 0.5% 1/10W
R419	1-216-651-11	s	METAL, CHIP 1K 0.5% 1/10W
R504	1-216-645-11	s	METAL, CHIP 560 0.5% 1/10W
R505	1-216-645-11	s	METAL, CHIP 560 0.5% 1/10W
RV1	1-237-514-21	s	RES, ADJ, METAL 500
RV3	1-237-502-21	s	RES, ADJ, METAL 5K
RV4	1-237-520-21	s	RES, ADJ, METAL 50K
RV5	1-237-520-21	s	RES, ADJ, METAL 50K
RV6	1-237-519-21	s	RES, ADJ, METAL 20K
RV7	1-237-518-21	s	RES, ADJ, METAL 10K
RV8	1-237-498-21	s	RES, ADJ, METAL FILM 200
RV13	1-237-502-21	s	RES, ADJ, METAL 5K
RV14	1-237-520-21	s	RES, ADJ, METAL 50K
RV15	1-237-520-21	s	RES, ADJ, METAL 50K
RV16	1-237-518-21	s	RES, ADJ, METAL 10K
RV17	1-237-518-21	s	RES, ADJ, METAL 10K
RV18	1-237-498-21	s	RES, ADJ, METAL FILM 200
RV22	1-237-503-21	s	RES, ADJ, METAL 10K
RV23	1-237-501-21	s	RES, ADJ, METAL 2K
RV33	1-237-517-21	s	RES, ADJ, METAL 5K
RV34	1-237-517-21	s	RES, ADJ, METAL 5K
RV35	1-237-517-21	s	RES, ADJ, METAL 5K
RV37	1-237-517-21	s	RES, ADJ, METAL 5K

(MD-46P BOARD)

Ref. No. or Q'ty	Part No.	SP	Description
RV38	1-237-515-21	s	RES, ADJ, METAL 1K
RV39	1-237-515-21	s	RES, ADJ, METAL 1K
RV42	1-237-506-21	s	RES, ADJ, METAL 100K
RV43	1-237-506-21	s	RES, ADJ, METAL 100K
RV44	1-237-520-21	s	RES, ADJ, METAL 50K
RV45	1-237-519-21	s	RES, ADJ, METAL 20K
RV46	1-237-520-21	s	RES, ADJ, METAL 50K
RV47	1-237-519-21	s	RES, ADJ, METAL 20K
RV50	1-237-514-21	s	RES, ADJ, METAL 500
RV51	1-237-514-21	s	RES, ADJ, METAL 500
RV54	1-237-500-21	s	RES, ADJ, METAL 1K
RV55	1-237-515-21	s	RES, ADJ, METAL 1K
RV56	1-237-515-21	s	RES, ADJ, METAL 1K
RV57	1-237-520-21	s	RES, ADJ, METAL 50K
RV58	1-237-520-21	s	RES, ADJ, METAL 50K
RV501	1-237-500-21	s	RES, ADJ, METAL 1K
S1	1-553-977-00	s	SWITCH, SLIDE
S2	1-570-337-11	s	SWITCH, DIGITAL
TH2	1-800-200-00	s	THERMISTOR S-3K
TH4	1-800-200-00	s	THERMISTOR S-3K
TH5	1-800-198-XX	s	THERMISTOR S-1K
TH6	1-800-198-XX	s	THERMISTOR S-1K
TH11	1-800-202-XX	s	THERMISTOR S-10K
TH12	1-800-202-XX	s	THERMISTOR S-10K
X1	1-567-916-12	s	CRYSTAL, 6.400000MHz
X2	1-567-958-12	s	CRYSTAL, 8.800000MHz
X3	1-577-095-11	s	CRYSTAL, 5.166667MHz
X4	1-577-096-11	s	CRYSTAL, 6.766667MHz

NOTE: Please see pages 19-51 and 19-52 for the parts that are not listed in the part list.

NR-32 BOARD

Ref. No. or Q'ty	Part No.	SP	Description
This board is included in TBC-12PC board.			
1pc	1-629-463-11	o	PRINTED CIRCUIT BOARD, NR-32
C726	1-135-159-21	s	TANTALUM, CHIP 10uF 10% 20V
C728	1-135-159-21	s	TANTALUM, CHIP 10uF 10% 20V
CP701	1-567-979-11	s	VCO, CRYSTAL, 27MHz
CP702	1-577-134-11	s	VCO, 13.500MHz
CV701	1-141-320-11	s	CAP, TRIMMER 45PF
DL701	1-415-661-11	s	DELAY LINE 110ns
DL702	1-415-661-11	s	DELAY LINE 110ns
IC701	8-759-947-00	s	IC CXD1328Q
IC702	8-752-322-72	s	IC CXK1202S
IC703	8-752-322-72	s	IC CXK1202S
IC704	8-752-322-72	s	IC CXK1202S
IC705	8-759-926-21	s	IC SN74HC161NS
IC706	8-759-926-21	s	IC SN74HC161NS
IC707	8-759-205-22	s	IC TC74HC240F
IC708	8-759-926-56	s	IC SN74HC273NS
IC709	8-759-926-21	s	IC SN74HC161NS
IC710	8-752-306-51	s	IC CX23065A
IC711	8-752-306-51	s	IC CX23065A
IC712	8-759-904-80	s	IC 74F04PC
IC713	8-759-904-84	s	IC 74F74PC
IC714	8-759-230-23	s	IC CXD1045AQ
IC715	8-759-230-23	s	IC CXD1045AQ
IC716	8-759-907-81	s	IC SN74LS221NS
IC717	8-759-904-83	s	IC 74F32PC
IC718	8-759-906-71	s	IC 74F175PC
IC719	8-759-915-93	s	IC 74F163APC
IC720	8-759-925-90	s	IC SN74HC74NS
IC721	8-759-930-57	s	IC SN74LS164NS
IC722	8-759-926-21	s	IC SN74HC161NS
IC723	8-759-926-21	s	IC SN74HC161NS
IC724	8-759-927-46	s	IC SN74HC00NS
IC725	8-759-930-51	s	IC SN74LS158NS
IC726	8-759-930-57	s	IC SN74LS164NS
R748	1-216-667-11	s	METAL, CHIP 4.7K 0.5% 1/10W
R749	1-216-663-11	s	METAL, CHIP 3.3K 0.5% 1/10W
RV701	1-230-521-11	s	RES, ADJ, METAL 2.2K
RV702	1-230-521-11	s	RES, ADJ, METAL 2.2K

PC-33 BOARD

Ref. No. or Q'ty	Part No.	SP	Description
1pc	1-622-604-11	o	PRINTED CIRCUIT BOARD, PC-33
1pc	1-562-148-11	o	HOUSING, 3P
3pcs	1-564-026-00	s	CONTACT, FEMALE, AWG26-30 (to CL-14 board)
D1	8-719-800-81	s	PHOTOINTERRUPTER TLP801A

PC-41 BOARD

Ref. No. or Q'ty	Part No.	SP	Description
1pc	1-623-267-11	o	PRINTED CIRCUIT BOARD, PC-41
D1	8-719-800-81	s	PHOTOINTERRUPTER TLP801A

PC-47 BOARD

Ref. No. or Q'ty	Part No.	SP	Description
1pc	1-628-786-11	o	PRINTED CIRCUIT BOARD, PC-47
1pc	1-563-969-11	o	CONNECTOR, F.P.C 7P (to CL-14 board)
D1	8-719-800-81	s	PHOTOINTERRUPTER TLP801A

PD-35 BOARD

Ref. No. or Q'ty	Part No.	SP	Description
1pc	1-622-596-11	o	PRINTED CIRCUIT BOARD, PD-35
CN851	1-506-467-11	s	CONNECTOR, 2P, MALE
CN852	1-508-900-00	s	CONNECTOR (M) 2P
CN854	1-506-471-11	s	CONNECTOR, 6P, MALE

PT-9 BOARD

Ref. No. or Q'ty	Part No.	SP	Description
1pc	1-605-018-00	o	PRINTED CIRCUIT BOARD, PT-9
Q1	8-729-205-32	s	TRANSISTOR 2SB553-Y

NOTE: Please see pages 19-51 and 19-52 for the parts that are not listed in the part list.

PTC-15 BOARD

Ref. No. or Q'ty	Part No.	SP	Description
1pc	1-622-597-11	o	PRINTED CIRCUIT BOARD, PTC-15
CN871	1-506-469-11	s	CONNECTOR, 4P, MALE
D1	8-719-800-81	s	PHOTOINTERRUPTER TLP801A
D2	8-719-800-81	s	PHOTOINTERRUPTER TLP801A

PTC-20 BOARD

Ref. No. or Q'ty	Part No.	SP	Description
1pc	1-622-598-11	o	PRINTED CIRCUIT BOARD, PTC-20
CN861	1-506-483-21	s	CONNECTOR, 4P, MALE
Q1	8-729-116-45	s	PHOTOTRANSISTOR PH110
Q2	8-729-116-45	s	PHOTOTRANSISTOR PH110
Q3	8-729-116-45	s	PHOTOTRANSISTOR PH110

PTC-21 BOARD

Ref. No. or Q'ty	Part No.	SP	Description
1pc	1-622-599-11	o	PRINTED CIRCUIT BOARD, PTC-21
CN862	1-506-484-11	s	CONNECTOR, 5P, MALE
D1	8-719-800-81	s	PHOTOINTERRUPTER TLP801A
D2	8-719-800-81	s	PHOTOINTERRUPTER TLP801A

PTC-23 BOARD

Ref. No. or Q'ty	Part No.	SP	Description
1pc	1-622-600-11	o	PRINTED CIRCUIT BOARD, PTC-23
CN863	1-506-482-11	s	CONNECTOR, 3P, MALE
D1	8-719-800-81	s	PHOTOINTERRUPTER TLP801A

PTC-31 BOARD

Ref. No. or Q'ty	Part No.	SP	Description
1pc	1-622-607-11	o	PRINTED CIRCUIT BOARD, PTC-31
D1	8-719-941-47	s	PHOTOINTERRUPTER GP-2S05

PTC-36 BOARD

Ref. No. or Q'ty	Part No.	SP	Description
1pc	1-622-601-11	o	PRINTED CIRCUIT BOARD, PTC-36
CN864	1-506-481-11	s	CONNECTOR, 2P, MALE
D1	8-719-123-69	s	DIODE SE310
D2	8-719-123-69	s	DIODE SE310
D3	8-719-123-69	s	DIODE SE310

NOTE: Please see pages 19-51 and 19-52 for the parts that are not listed in the part list.

PTC-39 BOARD

Ref. No. or Q'ty	Part No.	SP	Description
1pc	1-633-548-12	o	PRINTED CIRCUIT BOARD, PTC-39
1pc	2-124-699-02	o	HOLDER, SENSOR
C1	1-162-875-11	s	CERAMIC 68PF 5% 50V
C2	1-162-875-11	s	CERAMIC 68PF 5% 50V
C3	1-126-154-11	s	ELECT 47uF 20% 6.3V
C4	1-161-051-00	s	CERAMIC 0.01uF 10% 50V
C5	1-161-051-00	s	CERAMIC 0.01uF 10% 50V
CN1	1-506-471-11	s	CONNECTOR, 6P, MALE
DME1	8-745-001-00	s	DME DM-211A
IC1	8-759-945-58	s	IC UPC4558C
IC2	8-759-984-97	s	IC LM2903P
IC3	8-719-985-75	s	GP-1A53HR
IC4	8-719-985-74	s	GP-1A52HR
Q1	8-729-900-33	s	TRANSISTOR DTC144EF
R1	1-247-895-00	s	CARBON 470K 5% 1/4W
R7	1-247-895-00	s	CARBON 470K 5% 1/4W
RV1	1-228-472-00	s	RES, ADJ, METAL 2K
RV2	1-228-472-00	s	RES, ADJ, METAL 2K

PTC-40 BOARD

Ref. No. or Q'ty	Part No.	SP	Description
1pc	1-635-443-11	o	PRINTED CIRCUIT BOARD, PTC-40
CN1	1-506-485-11	s	CONNECTOR, 6P, MALE
IC1	8-719-939-50	s	PHOTOINTERRUPTER GP-1L52
IC2	8-719-939-50	s	PHOTOINTERRUPTER GP-1L52

RE-28PC BOARD

Ref. No. or Q'ty	Part No.	SP	Description
1pc	A-6715-354-A	s	MOUNTED CIRCUIT BOARD, RE-28PC
When this board is used in BVW-85P, perform the modificatio Please refer to Sec. 2-11-3.			
1pc	3-717-308-01	o	BRACKET (1), RE
1pc	7-682-947-01	s	SCREW +PSW 3X6
C1	1-161-051-00	s	CERAMIC 0.01uF 10% 50V
C2	1-161-051-00	s	CERAMIC 0.01uF 10% 50V
C3	1-124-910-11	s	ELECT 47uF 20% 50V
C8	1-161-051-00	s	CERAMIC 0.01uF 10% 50V
C9	1-124-360-00	s	ELECT 1000uF 20% 16V
CN811	1-506-473-11	s	CONNECTOR, 8P, MALE
CN812	1-506-471-11	s	CONNECTOR, 6P, MALE
CN813	1-506-473-11	s	CONNECTOR, 8P, MALE
CN814	1-508-901-00	o	CONNECTOR, 3P, MALE
CN815	1-506-470-11	s	CONNECTOR, 5P, MALE
CN816	1-506-471-11	s	CONNECTOR, 6P, MALE
CN817	1-506-468-11	s	CONNECTOR, 3P, MALE
CN818	1-506-468-11	s	CONNECTOR, 3P, MALE
CN819	1-506-468-11	s	CONNECTOR, 3P, MALE
CN820	1-506-477-11	s	CONNECTOR, 12P, MALE
CN821	1-506-477-11	s	CONNECTOR, 12P, MALE
CN822	1-506-469-11	s	CONNECTOR, 4P, MALE
CN823	1-508-949-00	o	CONNECTOR, 12P, MALE
CN824	1-506-473-11	o	CONNECTOR, 8P, MALE
D1	8-719-200-02	s	DIODE 10E2
IC1	8-759-108-77	s	IC CX877
Q1	8-729-140-96	s	TRANSISTOR 2SD774-4
Q2	8-729-376-84	s	TRANSISTOR 2SA768-G
Q3	8-729-140-96	s	TRANSISTOR 2SD774-4
Q4	8-729-111-67	s	TRANSISTOR 2SB1274-RS
Q5	8-729-140-97	s	TRANSISTOR 2SB734-3
Q6	8-729-140-96	s	TRANSISTOR 2SD774-4
R5	⚠1-216-389-11	s	METAL 1 5% 3W
R10	⚠1-215-866-11	s	METAL 330 5% 1W
R13	⚠1-216-386-11	s	METAL 0.56 5% 3W
R14	1-247-739-11	s	CARBON 100 5% 1/2W
R15	1-247-739-11	s	CARBON 100 5% 1/2W
R16	⚠1-216-389-11	s	METAL 1 5% 3W

NOTE: Please see pages 19-51 and 19-52 for the parts that are not listed in the part list.

RE-36 BOARD

Ref. No. or Q'ty	Part No.	SP	Description
1pc	A-6715-361-A	o	MOUNTED CIRCUIT BOARD, RE-36
CN801	1-506-473-11	s	CONNECTOR, 8P, MALE
CN802	1-563-233-11	o	CONNECTOR, FPC 13P, FEMALE
CN803	1-506-471-11	s	CONNECTOR, 6P, MALE
CN804	1-506-468-11	s	CONNECTOR, 3P, MALE
CN805	1-562-708-11	o	CONNECTOR, FPC 13P, FEMALE
CN806	1-508-901-00	o	CONNECTOR, 3P, MALE
CN807	1-506-477-11	o	CONNECTOR, 12P, MALE
D1	8-719-200-02	s	DIODE 10E2
D2	8-719-200-02	s	DIODE 10E2
IC101	8-759-982-02	s	IC RC4562DD
IC201	8-759-982-02	s	IC RC4562DD
L1	1-459-155-00	s	COIL 45uH
L2	1-459-155-00	s	COIL 45uH
Q1	8-729-102-47	s	TRANSISTOR 2SA1141-Q
Q2	8-729-140-96	s	TRANSISTOR 2SD774-4
Q3	8-729-140-97	s	TRANSISTOR 2SB734-3
Q4	8-729-102-57	s	TRANSISTOR 2SC3012
Q101	8-729-217-33	s	TRANSISTOR 2SC1173
Q102	8-729-111-67	s	TRANSISTOR 2SB1274-RS
Q201	8-729-217-33	s	TRANSISTOR 2SC1173
Q202	8-729-111-67	s	TRANSISTOR 2SB1274-RS
R2	⚠1-215-864-00	s	METAL 150 5% 1W
R5	⚠1-215-889-00	s	METAL 330 5% 2W
R101	⚠1-215-863-11	s	METAL 100 5% 1W
R102	⚠1-215-863-11	s	METAL 100 5% 1W
R103	⚠1-216-365-00	s	METAL 0.47 5% 2W
R105	1-215-439-00	s	METAL 5.6K 1% 1/6W
R106	1-215-439-00	s	METAL 5.6K 1% 1/6W
R108	1-247-895-00	s	CARBON 470K 5% 1/4W
R111	1-247-895-00	s	CARBON 470K 5% 1/4W
R201	⚠1-215-863-11	s	METAL 100 5% 1W
R202	⚠1-215-863-11	s	METAL 100 5% 1W
R203	⚠1-216-365-00	s	METAL 0.47 5% 2W
R205	1-215-439-00	s	METAL 5.6K 1% 1/6W
R206	1-215-439-00	s	METAL 5.6K 1% 1/6W
R208	1-247-895-00	s	CARBON 470K 5% 1/4W
R211	1-247-895-00	s	CARBON 470K 5% 1/4W

RE-69 BOARD

Ref. No. or Q'ty	Part No.	SP	Description
1pc	A-6727-223-A	o	MOUNTED CIRCUIT BOARD, RE-69
1pc	1-555-368-31	o	WIRE, GROUND
1pc	3-717-414-01	o	CASE, SHIELD, RE
1pc	3-717-415-01	o	BRACKET, RE
C2	1-161-055-00	s	CERAMIC 0.022uF 10% 50V
C4	1-107-093-91	s	MICA 220PF 5% 50V
C6	1-107-093-91	s	MICA 220PF 5% 50V
C8	1-161-039-00	s	CERAMIC 0.001uF 10% 50V
C9	1-161-055-00	s	CERAMIC 0.022uF 10% 50V
C12	1-161-055-00	s	CERAMIC 0.022uF 10% 50V
C14	1-107-093-91	s	MICA 220PF 5% 50V
C16	1-107-093-91	s	MICA 220PF 5% 50V
C18	1-161-039-00	s	CERAMIC 0.001uF 10% 50V
C19	1-161-055-00	s	CERAMIC 0.022uF 10% 50V
C22	1-161-055-00	s	CERAMIC 0.022uF 10% 50V
C24	1-161-055-00	s	CERAMIC 0.022uF 10% 50V
C30	1-130-477-00	s	MYLAR 0.0033uF 5% 50V
C31	1-130-487-00	s	MYLAR 0.022uF 5% 50V
C32	1-130-477-00	s	MYLAR 0.0033uF 5% 50V
C33	1-130-487-00	s	MYLAR 0.022uF 5% 50V
CN1	1-506-485-11	s	CONNECTOR, 6P, MALE
CN2	1-506-485-11	s	CONNECTOR, 6P, MALE
IC1	8-759-990-82	s	IC TL082CP
LV1	1-407-563-00	s	COIL, VAR 1uH
LV2	1-407-563-00	s	COIL, VAR 1uH
Q1	8-729-620-02	s	TRANSISTOR 2SA1115-E
Q2	8-729-378-84	s	TRANSISTOR 2SD788
Q3	8-729-378-84	s	TRANSISTOR 2SD788
Q4	8-729-119-78	s	TRANSISTOR 2SC2785-HFE
Q5	8-729-620-02	s	TRANSISTOR 2SA1115-E
Q6	8-729-378-84	s	TRANSISTOR 2SD788
Q7	8-729-378-84	s	TRANSISTOR 2SD788
Q8	8-729-119-78	s	TRANSISTOR 2SC2785-HFE
R4	1-215-439-00	s	METAL 5.6K 1% 1/6W
R5	1-215-429-00	s	METAL 2.2K 1% 1/6W
R6	1-215-385-00	s	METAL 33 1% 1/6W
R7	1-249-402-11	s	CARBON 56 5% 1/4W
R8	1-249-402-11	s	CARBON 56 5% 1/4W
R16	1-215-439-00	s	METAL 5.6K 1% 1/6W
R17	1-215-429-00	s	METAL 2.2K 1% 1/6W
R18	1-215-385-00	s	METAL 33 1% 1/6W
R19	1-249-402-11	s	CARBON 56 5% 1/4W
R20	1-249-402-11	s	CARBON 56 5% 1/4W
R33	1-215-433-00	s	METAL 3.3K 1% 1/6W
R37	1-215-433-00	s	METAL 3.3K 1% 1/6W
RV1	1-237-498-21	s	RES, ADJ, METAL FILM 200
RV2	1-237-498-21	s	RES, ADJ, METAL FILM 200
T1	1-433-194-00	s	TRANSFORMER, BIAS OSCILLATION
T2	1-433-194-00	s	TRANSFORMER, BIAS OSCILLATION

NOTE: Please see pages 19-51 and 19-52 for the parts that are not listed in the part list.

RM-40 BOARD

Ref. No. or Q'ty	Part No.	SP	Description
1pc	1-622-605-11	o	PRINTED CIRCUIT BOARD, RM-40
C1	1-102-363-00	s	CAP,CERAMIC 0.001MF
C2	1-102-363-00	s	CAP,CERAMIC 0.001MF
CN1	1-506-468-11	s	CONNECTOR, 3P, MALE
CN2	1-506-469-11	s	CONNECTOR, 4P, MALE
CN3	1-562-708-11	o	CONNECTOR, FPC 13P, FEMALE

RM-92 BOARD

Ref. No. or Q'ty	Part No.	SP	Description
1pc	1-635-563-11	o	PRINTED CIRCUIT BOARD, RM-92
1pc	1-555-368-31	o	WIRE, GROUND
C1	1-124-120-11	s	ELECT 220uF 20% 25V
C2	1-161-055-00	s	CERAMIC 0.022uF 10% 50V
C3	1-161-055-00	s	CERAMIC 0.022uF 10% 50V
CN450	1-559-263-11	o	CABLE, FLAT 40P
CN451	1-506-492-11	o	CONNECTOR, 13P, MALE
CN452	1-508-933-00	o	CONNECTOR, IL 2P, MALE
CN453	1-561-028-00	s	CONNECTOR, 36P
CN454	1-563-890-21	s	CONNECTOR, D-SUB 9P, FEMALE
CN455	1-563-890-21	s	CONNECTOR, D-SUB 9P, FEMALE
CN456	1-566-441-11	s	CONNECTOR, D-SUB 15P, MALE
FB1	1-535-178-00	s	BEAD, FERRITE
FB2	1-535-178-00	s	BEAD, FERRITE
R1	⚠1-215-906-11	s	METAL 15 5% 3W

RP-46 BOARD

Ref. No. or Q'ty	Part No.	SP	Description
1pc	A-6727-224-A	o	MOUNTED CIRCUIT BOARD, RP-46
This board includes DUS-362 board. See "DUS-362 BOARD" for details of it.			
3pcs	3-683-631-01	o	CLAMP
C101	1-124-455-00	s	ELECT 100uF 20% 16V
C111	1-124-455-00	s	ELECT 100uF 20% 16V
C119	1-124-455-00	s	ELECT 100uF 20% 16V
C125	1-124-455-00	s	ELECT 100uF 20% 16V
C203	1-126-177-11	s	ELECT 100uF 20% 10V
C204	1-163-241-11	s	CERAMIC, CHIP 39PF 5% 50V
C215	1-124-455-00	s	ELECT 100uF 20% 16V
C221	1-124-455-00	s	ELECT 100uF 20% 16V
C301	1-124-455-00	s	ELECT 100uF 20% 16V
C311	1-124-455-00	s	ELECT 100uF 20% 16V
C319	1-124-455-00	s	ELECT 100uF 20% 16V
C325	1-124-455-00	s	ELECT 100uF 20% 16V
C403	1-126-177-11	s	ELECT 100uF 20% 10V
C404	1-163-241-11	s	CERAMIC, CHIP 39PF 5% 50V
C415	1-124-455-00	s	ELECT 100uF 20% 16V
C421	1-124-455-00	s	ELECT 100uF 20% 16V
C527	1-130-472-00	s	MYLAR 0.0012uF 5% 50V
C531	1-163-103-00	s	CERAMIC, CHIP 27PF 5% 50V
C532	1-163-115-00	s	CERAMIC, CHIP 82PF 5% 50V
C533	1-163-103-00	s	CERAMIC, CHIP 27PF 5% 50V
C627	1-130-472-00	s	MYLAR 0.0012uF 5% 50V
C631	1-163-103-00	s	CERAMIC, CHIP 27PF 5% 50V
C632	1-163-115-00	s	CERAMIC, CHIP 82PF 5% 50V
C633	1-163-103-00	s	CERAMIC, CHIP 27PF 5% 50V
#C642	1-163-125-00	s	CERAMIC, CHIP 220PF 5% 50V
#C643	1-163-125-00	s	CERAMIC, CHIP 220PF 5% 50V
C701	1-131-350-00	s	TANTALUM 3.3uF 10% 35V
C801	1-124-471-00	s	ELECT 1000uF 20% 6.3V
C802	1-126-103-11	s	ELECT 470uF 20% 16V
C807	1-124-471-00	s	ELECT 1000uF 20% 6.3V
C808	1-126-103-11	s	ELECT 470uF 20% 16V
C809	1-124-471-00	s	ELECT 1000uF 20% 6.3V
C810	1-126-103-11	s	ELECT 470uF 20% 16V
C815	1-124-471-00	s	ELECT 1000uF 20% 6.3V
C816	1-126-103-11	s	ELECT 470uF 20% 16V
C818	1-124-471-00	s	ELECT 1000uF 20% 6.3V
C819	1-126-103-11	s	ELECT 470uF 20% 16V
C824	1-124-471-00	s	ELECT 1000uF 20% 6.3V
C825	1-126-103-11	s	ELECT 470uF 20% 16V
C826	1-124-455-00	s	ELECT 100uF 20% 16V
C827	1-124-455-00	s	ELECT 100uF 20% 16V
C828	1-124-455-00	s	ELECT 100uF 20% 16V
C829	1-124-455-00	s	ELECT 100uF 20% 16V
C830	1-124-455-00	s	ELECT 100uF 20% 16V
C831	1-124-455-00	s	ELECT 100uF 20% 16V
C846	1-126-177-11	s	ELECT 100uF 20% 10V
C847	1-126-177-11	s	ELECT 100uF 20% 10V
C848	1-126-177-11	s	ELECT 100uF 20% 10V
C849	1-126-177-11	s	ELECT 100uF 20% 10V
C850	1-126-177-11	s	ELECT 100uF 20% 10V
C851	1-126-177-11	s	ELECT 100uF 20% 10V

NOTE: Please see pages 19-51 and 19-52 for the parts that are not listed in the part list.

(RP-46 BOARD)

Ref. No. or Q'ty	Part No.	SP	Description
C866	1-126-177-11	s	ELECT 100uF 20% 10V
C867	1-126-177-11	s	ELECT 100uF 20% 10V
C868	1-126-177-11	s	ELECT 100uF 20% 10V
C869	1-126-177-11	s	ELECT 100uF 20% 10V
C870	1-126-177-11	s	ELECT 100uF 20% 10V
C871	1-126-177-11	s	ELECT 100uF 20% 10V
C872	1-126-177-11	s	ELECT 100uF 20% 10V
C876	1-126-177-11	s	ELECT 100uF 20% 10V
C888	1-124-455-00	s	ELECT 100uF 20% 16V
C889	1-124-455-00	s	ELECT 100uF 20% 16V
C890	1-124-455-00	s	ELECT 100uF 20% 16V
C891	1-124-455-00	s	ELECT 100uF 20% 16V
C892	1-124-455-00	s	ELECT 100uF 20% 16V
C893	1-124-455-00	s	ELECT 100uF 20% 16V
C894	1-124-455-00	s	ELECT 100uF 20% 16V
C903	1-130-471-00	s	MYLAR 0.001uF 5% 50V
C904	1-131-350-00	s	TANTALUM 3.3uF 10% 35V
CN751	1-566-085-11	s	CONNECTOR, 20P, MALE
CN752	1-566-085-11	s	CONNECTOR, 20P, MALE
CN911	1-506-468-11	s	CONNECTOR, 3P, MALE
CN912	1-506-468-11	s	CONNECTOR, 3P, MALE
CN913	1-506-467-11	s	CONNECTOR, 2P, MALE
CN921	1-506-468-11	s	CONNECTOR, 3P, MALE
CN922	1-506-468-11	s	CONNECTOR, 3P, MALE
CN923	1-506-467-11	s	CONNECTOR, 2P, MALE
CN931	1-506-471-11	s	CONNECTOR, 6P, MALE
CN932	1-506-468-11	o	CONNECTOR, 3P, MALE
CN933	1-506-467-11	s	CONNECTOR, 2P, MALE
CN941	1-506-468-11	s	CONNECTOR, 3P, MALE
CN942	1-506-468-11	s	CONNECTOR, 3P, MALE
CN943	1-506-467-11	s	CONNECTOR, 2P, MALE
CN951	1-506-468-11	s	CONNECTOR, 3P, MALE
CN952	1-506-468-11	s	CONNECTOR, 3P, MALE
CN953	1-506-469-11	s	CONNECTOR, 4P, MALE
CN954	1-506-468-11	s	CONNECTOR, 3P, MALE
CN961	1-506-468-11	s	CONNECTOR, 3P, MALE
CN962	1-506-468-11	s	CONNECTOR, 3P, MALE
CN963	1-506-469-11	s	CONNECTOR, 4P, MALE
CN964	1-506-468-11	s	CONNECTOR, 3P, MALE
CN972	1-506-469-11	s	CONNECTOR, 4P, MALE
CN973	1-506-470-11	s	CONNECTOR, 5P, MALE
CN975	1-506-471-11	s	CONNECTOR, 6P, MALE
CN981	1-508-904-00	s	CONNECTOR, 6P, MALE
CN982	1-506-471-11	s	CONNECTOR, 6P, MALE
CNI510	1-526-654-00	o	SOCKET, IC 16P
CNI610	1-526-654-00	o	SOCKET, IC 16P
CNI707	1-526-659-00	o	SOCKET, IC 28P
CNI708	1-526-659-00	o	SOCKET, IC 28P
CNI713	1-526-654-00	o	SOCKET, IC 16P
CV101	1-141-245-00	s	CAP, TRIMMER 30PF
CV201	1-141-297-11	s	CAP, TRIMMER 90PF
CV202	1-141-245-00	s	CAP, TRIMMER 30PF
CV401	1-141-297-11	s	CAP, TRIMMER 90PF
CV501	1-141-227-00	s	CAP, TRIMMER 20PF
CV502	1-141-227-00	s	CAP, TRIMMER 20PF

(RP-46 BOARD)

Ref. No. or Q'ty	Part No.	SP	Description
CV503	1-141-227-00	s	CAP, TRIMMER 20PF
CV504	1-141-227-00	s	CAP, TRIMMER 20PF
CV601	1-141-227-00	s	CAP, TRIMMER 20PF
CV602	1-141-227-00	s	CAP, TRIMMER 20PF
CV603	1-141-227-00	s	CAP, TRIMMER 20PF
CV604	1-141-227-00	s	CAP, TRIMMER 20PF
D1	8-719-400-18	s	DIODE MA152WK
D2	8-719-400-18	s	DIODE MA152WK
D3	8-719-400-18	s	DIODE MA152WK
D4	8-719-400-18	s	DIODE MA152WK
D5	8-719-400-18	s	DIODE MA152WK
D6	8-719-400-18	s	DIODE MA152WK
D7	8-719-400-18	s	DIODE MA152WK
D8	8-719-400-18	s	DIODE MA152WK
D9	8-719-400-18	s	DIODE MA152WK
D10	8-719-400-18	s	DIODE MA152WK
D11	8-719-400-18	s	DIODE MA152WK
D12	8-719-400-18	s	DIODE MA152WK
D13	8-719-400-18	s	DIODE MA152WK
D14	8-719-400-18	s	DIODE MA152WK
D15	8-719-400-18	s	DIODE MA152WK
D16	8-719-400-18	s	DIODE MA152WK
D101	8-719-109-60	s	DIODE RD2.7ES-B2
D201	8-719-109-60	s	DIODE RD2.7ES-B2
D202	8-719-800-76	s	DIODE 1SS226
D203	8-719-800-76	s	DIODE 1SS226
D301	8-719-109-60	s	DIODE RD2.7ES-B2
D401	8-719-800-76	s	DIODE 1SS226
D402	8-719-800-76	s	DIODE 1SS226
D403	8-719-109-60	s	DIODE RD2.7ES-B2
D901	8-719-400-35	s	LED LN35BP, GRN
DL501	1-415-479-11	s	DELAY LINE 28ns
DL601	1-415-479-11	s	DELAY LINE 28ns
FB101	1-543-309-12	s	BEAD, FERRITE
FB102	1-543-309-12	s	BEAD, FERRITE
FB103	1-543-309-12	s	BEAD, FERRITE
FB201	1-543-309-12	s	BEAD, FERRITE
FB301	1-543-309-12	s	BEAD, FERRITE
FB302	1-543-309-12	s	BEAD, FERRITE
FB303	1-543-309-12	s	BEAD, FERRITE
FB401	1-543-309-12	s	BEAD, FERRITE
IC1	8-759-009-10	s	IC MC14069UBF
IC2	8-759-009-19	s	IC MC14081BF
IC3	8-759-009-10	s	IC MC14069UBF
IC4	8-759-009-10	s	IC MC14069UBF
IC5	8-759-009-10	s	IC MC14069UBF
IC6	8-759-982-21	s	IC RC78L05A
IC101	8-743-931-10	s	IC BX3931A
IC102	8-741-130-60	s	IC BX1306
IC103	8-743-931-10	s	IC BX3931A
IC104	8-741-130-60	s	IC BX1306
IC105	1-807-991-11	s	IC BH1806
IC106	8-741-100-67	s	IC SBX1566-13
IC108	8-741-130-60	s	IC BX1306
IC109	8-743-931-10	s	IC BX3931A

NOTE: Please see pages 19-51 and 19-52 for the parts that are not listed in the part list.

(RP-46 BOARD)

Ref. No. or Q'ty	Part No.	SP	Description
IC201	8-759-012-00	s	IC MC10H116M
IC202	8-743-931-10	s	IC BX3931A
IC203	8-741-130-60	s	IC BX1306
IC204	8-741-130-60	s	IC BX1306
IC205	1-807-991-11	s	IC BH1806
IC206	8-741-100-67	s	IC SBX1566-13
IC208	8-741-130-60	s	IC BX1306
IC209	8-743-931-10	s	IC BX3931A
IC301	8-743-931-10	s	IC BX3931A
IC302	8-741-130-60	s	IC BX1306
IC303	8-743-931-10	s	IC BX3931A
IC304	8-741-130-60	s	IC BX1306
IC305	1-807-991-11	s	IC BH1806
IC306	1-807-987-11	s	IC BH1802
IC308	8-741-130-60	s	IC BX1306
IC309	8-743-931-10	s	IC BX3931A
IC401	8-759-012-00	s	IC MC10H116M
IC402	8-743-931-10	s	IC BX3931A
IC403	8-741-130-60	s	IC BX1306
IC404	8-741-130-60	s	IC BX1306
IC405	1-807-991-11	s	IC BH1806
IC406	1-807-987-11	s	IC BH1802
IC408	8-741-130-60	s	IC BX1306
IC409	8-743-931-10	s	IC BX3931A
IC501	8-759-112-53	s	IC UPC1663G
IC502	8-743-931-10	s	IC BX3931A
IC503	8-741-130-60	s	IC BX1306
IC504	8-759-112-53	s	IC UPC1663G
IC505	8-743-931-10	s	IC BX3931A
IC506	8-741-130-60	s	IC BX1306
IC507	8-759-112-53	s	IC UPC1663G
IC508	8-752-030-66	s	IC CXA1077M
IC509	8-759-112-53	s	IC UPC1663G
IC510	8-759-939-71	s	IC AM6685DL
IC511	8-759-112-53	s	IC UPC1663G
IC512	8-759-941-27	s	IC MB4002PF
IC601	8-759-112-53	s	IC UPC1663G
IC602	8-743-931-10	s	IC BX3931A
IC603	8-741-130-60	s	IC BX1306
IC604	8-759-112-53	s	IC UPC1663G
IC605	8-743-931-10	s	IC BX3931A
IC606	8-741-130-60	s	IC BX1306
IC607	8-759-112-53	s	IC UPC1663G
IC608	8-752-030-66	s	IC CXA1077M
IC609	8-759-112-53	s	IC UPC1663G
IC610	8-759-939-71	s	IC AM6685DL
IC701	8-759-009-02	s	IC MC14046BF
IC702	8-759-926-23	s	IC SN74HC163NS
IC703	8-759-926-23	s	IC SN74HC163NS
IC704	8-759-925-80	s	IC SN74HC14NS
IC705	8-759-239-23	s	IC TC74HC86AF
IC706	8-759-926-23	s	IC SN74HC163NS
IC707	8-759-738-43	s	IC 128-BVW85PV1.00RP1
IC708	8-759-738-44	s	IC 128-BVW85PV1.00RP2
IC709	8-759-925-90	s	IC SN74HC74NS
IC710	8-759-925-90	s	IC SN74HC74NS

(RP-46 BOARD)

Ref. No. or Q'ty	Part No.	SP	Description
IC711	8-759-925-75	s	IC SN74HC05NS
IC712	8-759-925-75	s	IC SN74HC05NS
IC902	8-759-206-28	s	IC TC74HC123F
IC903	8-759-925-76	s	IC SN74HC08NS
L101	1-410-464-11	s	INDUCTOR 3.3uH
L201	1-410-464-11	s	INDUCTOR 3.3uH
L501	1-410-468-11	s	INDUCTOR 6.8uH
L502	1-410-468-11	s	INDUCTOR 6.8uH
L503	1-410-473-11	s	INDUCTOR 18uH
L505	1-410-473-11	s	INDUCTOR 18uH
L601	1-410-468-11	s	INDUCTOR 6.8uH
L602	1-410-468-11	s	INDUCTOR 6.8uH
L801	1-424-154-11	s	COIL, LINE FILTER
L802	1-424-154-11	s	COIL, LINE FILTER
L803	1-424-154-11	s	COIL, LINE FILTER
L804	1-424-154-11	s	COIL, LINE FILTER
L805	1-424-154-11	s	COIL, LINE FILTER
L806	1-424-154-11	s	COIL, LINE FILTER
Q1	8-729-202-38	s	TRANSISTOR 2SC3326N
Q2	8-729-102-07	s	TRANSISTOR 2SC2223-F13
Q3	8-729-102-07	s	TRANSISTOR 2SC2223-F13
Q4	8-729-102-07	s	TRANSISTOR 2SC2223-F13
Q5	8-729-102-07	s	TRANSISTOR 2SC2223-F13
Q6	8-729-202-38	s	TRANSISTOR 2SC3326N
Q7	8-729-202-38	s	TRANSISTOR 2SC3326N
Q8	8-729-202-38	s	TRANSISTOR 2SC3326N
Q9	8-729-202-38	s	TRANSISTOR 2SC3326N
Q14	8-729-202-38	s	TRANSISTOR 2SC3326N
Q15	8-729-202-38	s	TRANSISTOR 2SC3326N
Q16	8-729-202-38	s	TRANSISTOR 2SC3326N
Q17	8-729-102-07	s	TRANSISTOR 2SC2223-F13
Q18	8-729-102-07	s	TRANSISTOR 2SC2223-F13
Q19	8-729-102-07	s	TRANSISTOR 2SC2223-F13
Q20	8-729-102-07	s	TRANSISTOR 2SC2223-F13
Q21	8-729-202-38	s	TRANSISTOR 2SC3326N
Q22	8-729-202-38	s	TRANSISTOR 2SC3326N
Q23	8-729-202-38	s	TRANSISTOR 2SC3326N
Q24	8-729-202-38	s	TRANSISTOR 2SC3326N
Q29	8-729-202-38	s	TRANSISTOR 2SC3326N
Q30	8-729-202-38	s	TRANSISTOR 2SC3326N
Q101	8-729-201-27	s	TRANSISTOR 2SC2715-Y
Q102	8-729-122-63	s	TRANSISTOR 2SA1226
Q103	8-729-201-27	s	TRANSISTOR 2SC2715-Y
Q104	8-729-122-63	s	TRANSISTOR 2SA1226
Q105	8-729-201-27	s	TRANSISTOR 2SC2715-Y
Q106	8-729-122-63	s	TRANSISTOR 2SA1226
Q107	8-729-201-27	s	TRANSISTOR 2SC2715-Y
Q108	8-729-122-63	s	TRANSISTOR 2SA1226
Q109	8-729-201-27	s	TRANSISTOR 2SC2715-Y
Q110	8-729-202-38	s	TRANSISTOR 2SC3326N
Q111	8-729-202-38	s	TRANSISTOR 2SC3326N
Q112	8-729-202-38	s	TRANSISTOR 2SC3326N
Q113	8-729-202-38	s	TRANSISTOR 2SC3326N
Q201	8-729-202-38	s	TRANSISTOR 2SC3326N
Q202	8-729-202-38	s	TRANSISTOR 2SC3326N
Q203	8-729-202-38	s	TRANSISTOR 2SC3326N

NOTE: Please see pages 19-51 and 19-52 for the parts that are not listed in the part list.

(RP-46 BOARD)

Ref. No. or Q'ty	Part No.	SP	Description
Q204	8-729-202-38	s	TRANSISTOR 2SC3326N
Q301	8-729-201-27	s	TRANSISTOR 2SC2715-Y
Q302	8-729-122-63	s	TRANSISTOR 2SA1226
Q303	8-729-201-27	s	TRANSISTOR 2SC2715-Y
Q304	8-729-122-63	s	TRANSISTOR 2SA1226
Q305	8-729-201-27	s	TRANSISTOR 2SC2715-Y
Q306	8-729-122-63	s	TRANSISTOR 2SA1226
Q307	8-729-201-27	s	TRANSISTOR 2SC2715-Y
Q308	8-729-122-63	s	TRANSISTOR 2SA1226
Q309	8-729-201-27	s	TRANSISTOR 2SC2715-Y
Q310	8-729-202-38	s	TRANSISTOR 2SC3326N
Q311	8-729-202-38	s	TRANSISTOR 2SC3326N
Q312	8-729-202-38	s	TRANSISTOR 2SC3326N
Q313	8-729-202-38	s	TRANSISTOR 2SC3326N
Q401	8-729-202-38	s	TRANSISTOR 2SC3326N
Q402	8-729-202-38	s	TRANSISTOR 2SC3326N
Q403	8-729-202-38	s	TRANSISTOR 2SC3326N
Q404	8-729-202-38	s	TRANSISTOR 2SC3326N
Q501	8-729-201-27	s	TRANSISTOR 2SC2715-Y
Q502	8-729-201-27	s	TRANSISTOR 2SC2715-Y
Q503	8-729-201-27	s	TRANSISTOR 2SC2715-Y
Q504	8-729-201-27	s	TRANSISTOR 2SC2715-Y
Q505	8-729-201-27	s	TRANSISTOR 2SC2715-Y
Q506	8-729-201-27	s	TRANSISTOR 2SC2715-Y
Q601	8-729-201-27	s	TRANSISTOR 2SC2715-Y
Q602	8-729-201-27	s	TRANSISTOR 2SC2715-Y
Q603	8-729-201-27	s	TRANSISTOR 2SC2715-Y
Q604	8-729-201-27	s	TRANSISTOR 2SC2715-Y
Q605	8-729-201-27	s	TRANSISTOR 2SC2715-Y
Q701	8-729-901-01	s	TRANSISTOR DTC144EK
Q702	8-729-901-01	s	TRANSISTOR DTC144EK
Q901	8-729-202-38	s	TRANSISTOR 2SC3326N
Q902	8-729-202-38	s	TRANSISTOR 2SC3326N
Q903	8-729-202-38	s	TRANSISTOR 2SC3326N
Q904	8-729-202-38	s	TRANSISTOR 2SC3326N
Q905	8-729-901-01	s	TRANSISTOR DTC144EK
R24	1-216-643-11	s	METAL, CHIP 470 0.5% 1/10W
R25	1-216-643-11	s	METAL, CHIP 470 0.5% 1/10W
R101	1-216-624-11	s	METAL, CHIP 75 0.5% 1/10W
R102	1-216-651-11	s	METAL, CHIP 1K 0.5% 1/10W
R104	1-216-643-11	s	METAL, CHIP 470 0.5% 1/10W
R114	1-216-643-11	s	METAL, CHIP 470 0.5% 1/10W
R128	1-216-683-11	s	METAL, CHIP 22K 0.5% 1/10W
R136	1-216-627-11	s	METAL, CHIP 100 0.5% 1/10W
R137	1-216-651-11	s	METAL, CHIP 1K 0.5% 1/10W
R140	1-216-619-11	s	METAL, CHIP 47 0.5% 1/10W
R201	1-216-620-11	s	METAL, CHIP 51 0.5% 1/10W
R202	1-216-620-11	s	METAL, CHIP 51 0.5% 1/10W
R204	1-216-629-11	s	METAL, CHIP 120 0.5% 1/10W
R207	1-216-631-11	s	METAL, CHIP 150 0.5% 1/10W
R214	1-216-683-11	s	METAL, CHIP 22K 0.5% 1/10W
R222	1-216-627-11	s	METAL, CHIP 100 0.5% 1/10W
R223	1-216-651-11	s	METAL, CHIP 1K 0.5% 1/10W
R226	1-216-619-11	s	METAL, CHIP 47 0.5% 1/10W
R301	1-216-624-11	s	METAL, CHIP 75 0.5% 1/10W
R302	1-216-651-11	s	METAL, CHIP 1K 0.5% 1/10W

(RP-46 BOARD)

Ref. No. or Q'ty	Part No.	SP	Description
R304	1-216-643-11	s	METAL, CHIP 470 0.5% 1/10W
R314	1-216-643-11	s	METAL, CHIP 470 0.5% 1/10W
R328	1-216-683-11	s	METAL, CHIP 22K 0.5% 1/10W
R333	1-216-643-11	s	METAL, CHIP 470 0.5% 1/10W
R336	1-216-627-11	s	METAL, CHIP 100 0.5% 1/10W
R337	1-216-651-11	s	METAL, CHIP 1K 0.5% 1/10W
R340	1-216-619-11	s	METAL, CHIP 47 0.5% 1/10W
R341	1-216-643-11	s	METAL, CHIP 470 0.5% 1/10W
R401	1-216-620-11	s	METAL, CHIP 51 0.5% 1/10W
R402	1-216-620-11	s	METAL, CHIP 51 0.5% 1/10W
R404	1-216-629-11	s	METAL, CHIP 120 0.5% 1/10W
R407	1-216-631-11	s	METAL, CHIP 150 0.5% 1/10W
R414	1-216-683-11	s	METAL, CHIP 22K 0.5% 1/10W
R419	1-216-643-11	s	METAL, CHIP 470 0.5% 1/10W
R422	1-216-627-11	s	METAL, CHIP 100 0.5% 1/10W
R423	1-216-651-11	s	METAL, CHIP 1K 0.5% 1/10W
R426	1-216-619-11	s	METAL, CHIP 47 0.5% 1/10W
R506	1-216-638-11	s	METAL, CHIP 300 0.5% 1/10W
R512	1-216-627-11	s	METAL, CHIP 100 0.5% 1/10W
R513	1-216-651-11	s	METAL, CHIP 1K 0.5% 1/10W
R516	1-216-619-11	s	METAL, CHIP 47 0.5% 1/10W
R522	1-216-638-11	s	METAL, CHIP 300 0.5% 1/10W
R528	1-216-627-11	s	METAL, CHIP 100 0.5% 1/10W
R529	1-216-651-11	s	METAL, CHIP 1K 0.5% 1/10W
R532	1-216-619-11	s	METAL, CHIP 47 0.5% 1/10W
R545	1-216-627-11	s	METAL, CHIP 100 0.5% 1/10W
R546	1-216-627-11	s	METAL, CHIP 100 0.5% 1/10W
R547	1-216-638-11	s	METAL, CHIP 300 0.5% 1/10W
R548	1-216-638-11	s	METAL, CHIP 300 0.5% 1/10W
R566	1-216-651-11	s	METAL, CHIP 1K 0.5% 1/10W
R567	1-216-651-11	s	METAL, CHIP 1K 0.5% 1/10W
R577	1-216-629-11	s	METAL, CHIP 120 0.5% 1/10W
#R606	1-216-031-00	s	METAL, CHIP 180 0.5% 1/10W
R612	1-216-627-11	s	METAL, CHIP 100 0.5% 1/10W
R613	1-216-651-11	s	METAL, CHIP 1K 0.5% 1/10W
R616	1-216-619-11	s	METAL, CHIP 47 0.5% 1/10W
#R622	1-216-031-00	s	METAL, CHIP 180 0.5% 1/10W
R628	1-216-627-11	s	METAL, CHIP 100 0.5% 1/10W
R629	1-216-651-11	s	METAL, CHIP 1K 0.5% 1/10W
R632	1-216-619-11	s	METAL, CHIP 47 0.5% 1/10W
R645	1-216-627-11	s	METAL, CHIP 100 0.5% 1/10W
R646	1-216-627-11	s	METAL, CHIP 100 0.5% 1/10W
R647	1-216-638-11	s	METAL, CHIP 300 0.5% 1/10W
R648	1-216-638-11	s	METAL, CHIP 300 0.5% 1/10W
R677	1-216-629-11	s	METAL, CHIP 120 0.5% 1/10W
R711	1-216-679-11	s	METAL, CHIP 15K 0.5% 1/10W
R712	1-216-661-11	s	METAL, CHIP 2.7K 0.5% 1/10W
R713	1-216-679-11	s	METAL, CHIP 15K 0.5% 1/10W
R911	1-216-681-11	s	METAL, CHIP 18K 0.5% 1/10W
R912	1-216-693-11	s	METAL, CHIP 56K 0.5% 1/10W
RV101	1-237-516-21	s	RES, ADJ, METAL 2K
RV102	1-237-516-21	s	RES, ADJ, METAL 2K
RV103	1-237-516-21	s	RES, ADJ, METAL 2K
RV104	1-237-516-21	s	RES, ADJ, METAL 2K
RV105	1-237-512-21	s	RES, ADJ, METAL 100
RV106	1-237-515-21	s	RES, ADJ, METAL 1K

NOTE: Please see pages 19-51 and 19-52 for the parts that are not listed in the part list.

(RP-46 BOARD)

Ref. No. or Q'ty	Part No.	SP	Description
RV107	1-237-515-21	s	RES, ADJ, METAL 1K
RV108	1-237-516-21	s	RES, ADJ, METAL 2K
RV201	1-224-935-00	s	RES, VAR METAL 200
RV202	1-237-514-21	s	RES, ADJ, METAL 500
RV203	1-237-512-21	s	RES, ADJ, METAL 100
RV204	1-237-515-21	s	RES, ADJ, METAL 1K
RV205	1-237-515-21	s	RES, ADJ, METAL 1K
RV206	1-237-516-21	s	RES, ADJ, METAL 2K
RV301	1-237-516-21	s	RES, ADJ, METAL 2K
RV302	1-237-516-21	s	RES, ADJ, METAL 2K
RV303	1-237-516-21	s	RES, ADJ, METAL 2K
RV304	1-237-516-21	s	RES, ADJ, METAL 2K
RV305	1-237-512-21	s	RES, ADJ, METAL 100
RV306	1-237-515-21	s	RES, ADJ, METAL 1K
RV307	1-237-515-21	s	RES, ADJ, METAL 1K
RV308	1-237-516-21	s	RES, ADJ, METAL 2K
RV309	1-237-515-21	s	RES, ADJ, METAL 1K
RV401	1-224-935-00	s	RES, VAR METAL 200
RV402	1-237-514-21	s	RES, ADJ, METAL 500
RV403	1-237-512-21	s	RES, ADJ, METAL 100
RV404	1-237-515-21	s	RES, ADJ, METAL 1K
RV405	1-237-515-21	s	RES, ADJ, METAL 1K
RV406	1-237-516-21	s	RES, ADJ, METAL 2K
RV501	1-237-514-21	s	RES, ADJ, METAL 500
RV502	1-237-514-21	s	RES, ADJ, METAL 500
RV503	1-237-514-21	s	RES, ADJ, METAL 500
RV504	1-237-519-21	s	RES, ADJ, METAL 20K
RV505	1-237-519-21	s	RES, ADJ, METAL 20K
RV601	1-237-514-21	s	RES, ADJ, METAL 500
RV602	1-237-514-21	s	RES, ADJ, METAL 500
RV603	1-237-514-21	s	RES, ADJ, METAL 500
RV604	1-237-519-21	s	RES, ADJ, METAL 20K
S701	1-570-832-11	s	SWITCH, SLIDE
SP101	1-566-388-11	s	CONNECTOR, 8P, MALE
SP201	1-566-388-11	s	CONNECTOR, 8P, MALE
SP301	1-566-388-11	s	CONNECTOR, 8P, MALE
SP401	1-566-388-11	s	CONNECTOR, 8P, MALE
SP701	1-566-388-11	s	CONNECTOR, 8P, MALE
SS101	1-565-413-11	o	PLUG, SHORTING
SS201	1-565-413-11	o	PLUG, SHORTING
SS301	1-565-413-11	o	PLUG, SHORTING
SS401	1-565-413-11	o	PLUG, SHORTING
SS701	1-565-413-11	o	PLUG, SHORTING
T101	1-427-545-11	s	TRANSFORMER, RF OUTPUT
T102	1-427-595-11	s	TRANSFORMER, RF
T201	1-427-545-11	s	TRANSFORMER, RF OUTPUT
T202	1-427-595-11	s	TRANSFORMER, RF
T301	1-427-545-11	s	TRANSFORMER, RF OUTPUT
T302	1-427-592-11	s	TRANSFORMER, RF INPUT
T401	1-427-545-11	s	TRANSFORMER, RF OUTPUT
T402	1-427-592-11	s	TRANSFORMER, RF INPUT

SE-146 BOARD

Ref. No. or Q'ty	Part No.	SP	Description
1pc	A-6715-440-A	o	MOUNTED CIRCUIT BOARD, SE-146
2pcs	7-621-773-95	s	SCREW +B 2.6X6
2pcs	7-682-947-01	s	SCREW +PSW 3X6
C3	1-130-027-91	s	FILM 0.0056uF 5% 50V
C4	1-130-479-00	s	MYLAR 0.0047uF 5% 50V
C5	1-130-491-00	s	MYLAR 0.047uF 5% 50V
C6	1-130-497-00	s	MYLAR 0.15uF 5% 50V
C7	1-124-443-00	s	ELECT 100uF 20% 10V
C8	1-161-043-00	s	CERAMIC 0.0022uF 10% 50V
C9	1-161-043-00	s	CERAMIC 0.0022uF 10% 50V
C10	1-124-478-11	s	ELECT 100uF 20% 25V
C11	1-124-478-11	s	ELECT 100uF 20% 25V
C12	1-130-483-00	s	MYLAR 0.01uF 5% 50V
CN701	1-506-471-11	s	CONNECTOR, 6P, MALE
CN702	1-506-470-11	s	CONNECTOR, 5P, MALE
CN703	1-506-477-11	s	CONNECTOR, 12P, MALE
CN704	1-506-468-11	s	CONNECTOR, 3P, MALE
D1	8-719-911-19	s	DIODE 1SS119
D2	8-719-911-19	s	DIODE 1SS119
D3	8-719-911-19	s	DIODE 1SS119
D4	8-719-911-19	s	DIODE 1SS119
D5	8-719-911-19	s	DIODE 1SS119
D6	8-719-911-19	s	DIODE 1SS119
IC1	8-759-981-64	s	IC LM2903DQ
IC2	8-759-045-38	s	IC MC14538BCP
IC3	8-759-945-58	s	IC UPC4558C
IC4	8-759-208-51	s	IC TA7257P
IC5	8-759-981-64	s	IC LM2903DQ
IC6	8-759-140-11	s	IC MC14011BCP
IC7	8-759-982-07	s	IC RC7808FA
IC8	8-759-040-53	s	IC MC14053BCP
Q1	8-729-119-78	s	TRANSISTOR 2SC2785-HFE
Q2	8-729-820-14	s	TRANSISTOR 2SD1913-RS
Q3	8-729-111-67	s	TRANSISTOR 2SB1274-RS
Q4	8-729-119-78	s	TRANSISTOR 2SC2785-HFE
Q5	8-729-119-76	s	TRANSISTOR 2SA1115P
Q6	8-729-119-78	s	TRANSISTOR 2SC2785-HFE
Q7	8-729-119-78	s	TRANSISTOR 2SC2785-HFE
Q8	8-729-119-78	s	TRANSISTOR 2SC2785-HFE
Q9	8-729-900-89	s	TRANSISTOR DTC144ES
Q10	8-729-900-89	s	TRANSISTOR DTC144ES
R2	1-249-413-11	s	CARBON 470 5% 1/4W
R4	1-249-419-11	s	CARBON 1.5K 5% 1/4W
R5	1-247-895-00	s	CARBON 470K 5% 1/4W
R11	1-215-468-00	s	METAL 91K 1% 1/6W
R29	1-216-347-11	s	METAL 0.68 5% 1W
R30	1-216-347-11	s	METAL 0.68 5% 1W
R31	1-249-413-11	s	CARBON 470 5% 1/4W
S2	1-554-303-21	s	SWITCH, TACTILE
S3	1-554-303-21	s	SWITCH, TACTILE

NOTE: Please see pages 19-51 and 19-52 for the parts that are not listed in the part list.

SV-82PC BOARD

Ref. No. or Q'ty	Part No.	SP	Description
1pc	A-6715-356-A	s	MOUNTED CIRCUIT BOARD, SV-82PC
When this board is used in BVW-85P, perform the modificatio			
Please refer to Sec. 2-11-3.			
2pcs	7-622-207-05	s	N 2.6, TYPE 2
2pcs	7-628-254-30	s	SCREW +PS 2.6X10
C101	1-124-963-11	s	ELECT 33uF 20% 16V
C104	1-107-210-00	s	MICA 22PF 5% 500V
C105	1-107-210-00	s	MICA 22PF 5% 500V
C106	1-124-598-11	s	ELECT 22uF 20% 25V
C107	1-130-483-00	s	MYLAR 0.01uF 5% 50V
C108	1-130-483-00	s	MYLAR 0.01uF 5% 50V
C109	1-130-483-00	s	MYLAR 0.01uF 5% 50V
C110	1-124-598-11	s	ELECT 22uF 20% 25V
C113	1-130-471-00	s	MYLAR 0.001uF 5% 50V
C114	1-130-471-00	s	MYLAR 0.001uF 5% 50V
C115	1-130-471-00	s	MYLAR 0.001uF 5% 50V
C116	1-130-471-00	s	MYLAR 0.001uF 5% 50V
C117	1-130-471-00	s	MYLAR 0.001uF 5% 50V
C118	1-130-471-00	s	MYLAR 0.001uF 5% 50V
C119	1-130-471-00	s	MYLAR 0.001uF 5% 50V
C120	1-130-471-00	s	MYLAR 0.001uF 5% 50V
C121	1-130-471-00	s	MYLAR 0.001uF 5% 50V
C122	1-130-471-00	s	MYLAR 0.001uF 5% 50V
C123	1-130-471-00	s	MYLAR 0.001uF 5% 50V
C124	1-130-471-00	s	MYLAR 0.001uF 5% 50V
C126	1-130-483-00	s	MYLAR 0.01uF 5% 50V
C130	1-107-210-00	s	MICA 22PF 5% 500V
C308	1-126-154-11	s	ELECT 47uF 20% 6.3V
C309	1-126-154-11	s	ELECT 47uF 20% 6.3V
CN206	1-506-748-11	s	CONNECTOR, DIN 96P, MALE
D1	8-719-911-19	s	DIODE 1SS119
D2	8-719-911-19	s	DIODE 1SS119
D101	8-719-911-19	s	DIODE 1SS119
D102	8-719-911-19	s	DIODE 1SS119
D103	8-719-911-19	s	DIODE 1SS119
D104	8-719-911-19	s	DIODE 1SS119
D105	8-719-911-19	s	DIODE 1SS119
D106	8-719-911-19	s	DIODE 1SS119
D107	8-719-911-19	s	DIODE 1SS119
D108	8-719-911-19	s	DIODE 1SS119
D109	8-719-911-19	s	DIODE 1SS119
D110	8-719-911-19	s	DIODE 1SS119
D111	8-719-911-19	s	DIODE 1SS119
D114	8-719-911-19	s	DIODE 1SS119
IC1	8-759-113-55	s	IC UPD71054GB
IC2	8-759-113-55	s	IC UPD71054GB
IC3	8-759-113-55	s	IC UPD71054GB
IC4	8-759-113-55	s	IC UPD71054GB
IC5	8-759-113-55	s	IC UPD71054GB
IC6	8-759-938-83	s	IC CF77074NT
IC7	8-759-938-83	s	IC CF77074NT
IC8	8-759-938-83	s	IC CF77074NT
IC9	8-759-925-90	s	IC SN74HC74NS
IC10	8-759-926-97	s	IC SN74HC4024NS

(SV-82PC BOARD)

Ref. No. or Q'ty	Part No.	SP	Description
IC11	8-759-925-80	s	IC SN74HC14NS
IC12	8-759-925-80	s	IC SN74HC14NS
IC14	8-759-009-07	s	IC MC14053BF
IC101	8-759-926-49	s	IC SN74HC245NS
IC102	8-759-926-48	s	IC SN74HC244NS
IC103	8-759-009-06	s	IC MC14052BF
IC104	8-759-927-29	s	IC SN74HCU04NS
IC105	8-752-323-64	s	IC CXK5816M-12L
IC106	8-759-926-11	s	IC SN74HC138NS
IC107	8-759-926-11	s	IC SN74HC138NS
IC108	8-759-926-12	s	IC SN74HC139NS
IC109	8-759-738-41	s	IC C256A-BVW85PV1.00SV
IC110	8-759-926-66	s	IC SN74HC373NS
IC111	8-759-113-03	s	IC UPD78310CW
IC112	8-759-926-98	s	IC SN74HC4040NS
IC113	8-759-103-95	s	IC UPC648C
IC114	8-759-908-92	s	IC TL084CNS
IC116	8-759-908-92	s	IC TL084CNS
IC117	8-759-908-92	s	IC TL084CNS
IC118	8-759-008-67	s	IC MC14066BF
IC119	8-759-008-67	s	IC MC14066BF
IC120	8-759-938-68	s	IC CXD1095Q
IC121	8-759-982-25	s	IC RC78L09A
IC122	8-759-925-76	s	IC SN74HC08NS
L1	1-410-476-11	s	INDUCTOR 33uH
L2	1-410-476-11	s	INDUCTOR 33uH
L3	1-410-476-11	s	INDUCTOR 33uH
L4	1-410-476-11	s	INDUCTOR 33uH
Q1	8-729-119-78	s	TRANSISTOR 2SC2785-HFE
Q2	8-729-119-78	s	TRANSISTOR 2SC2785-HFE
Q3	8-729-119-78	s	TRANSISTOR 2SC2785-HFE
R114	1-217-666-31	s	RES, SHORTING 0.01 1/6W
R116	1-217-666-31	s	RES, SHORTING 0.01 1/6W
R133	1-215-438-00	s	METAL 5.1K 1% 1/6W
R134	1-215-438-00	s	METAL 5.1K 1% 1/6W
R135	1-249-419-11	s	CARBON 1.5K 5% 1/4W
R137	1-215-450-00	s	METAL 16K 1% 1/6W
R138	1-215-452-00	s	METAL 20K 1% 1/6W
R139	1-215-445-00	s	METAL 10K 1% 1/6W
R140	1-215-445-00	s	METAL 10K 1% 1/6W
RB101	1-231-557-00	s	RESISTOR BLOCK 100Kx4
RV101	1-237-515-21	s	RES, ADJ, METAL 1K
RV102	1-237-505-21	s	RES, ADJ, METAL 50K
RV103	1-237-505-21	s	RES, ADJ, METAL 50K
S101	1-553-572-00	s	SWITCH, DIP 4-CKT
X101	1-567-865-11	s	CRYSTAL, 12.00MHz

NOTE: Please see pages 19-51 and 19-52 for the parts that are not listed in the part list.

SV-121 BOARD

Ref. No. or Q'ty	Part No.	SP	Description
1pc	A-6715-442-A	o	MOUNTED CIRCUIT BOARD, SV-121
2pcs	7-622-207-05	s	N 2.6, TYPE 2
2pcs	7-628-254-30	s	SCREW +PS 2.6X10
C4	1-130-485-00	s	MYLAR 0.015uF 5% 50V
C5	1-130-487-00	s	MYLAR 0.022uF 5% 50V
C11	1-130-487-00	s	MYLAR 0.022uF 5% 50V
C13	1-130-487-00	s	MYLAR 0.022uF 5% 50V
C14	1-130-487-00	s	MYLAR 0.022uF 5% 50V
C15	1-126-154-11	s	ELECT 47uF 20% 6.3V
C16	1-126-154-11	s	ELECT 47uF 20% 6.3V
C17	1-130-487-00	s	MYLAR 0.022uF 5% 50V
C22	1-130-489-00	s	MYLAR 0.033uF 5% 50V
C25	1-130-489-00	s	MYLAR 0.033uF 5% 50V
C28	1-130-489-00	s	MYLAR 0.033uF 5% 50V
C33	1-130-489-00	s	MYLAR 0.033uF 5% 50V
C34	1-130-471-00	s	MYLAR 0.001uF 5% 50V
C35	1-130-471-00	s	MYLAR 0.001uF 5% 50V
C203	1-124-234-00	s	ELECT 22uF 20% 16V
C204	1-131-345-00	s	TANTALUM 0.47uF 10% 35V
C206	1-130-477-00	s	MYLAR 0.0033uF 5% 50V
C207	1-130-471-00	s	MYLAR 0.001uF 5% 50V
C209	1-136-287-11	s	FILM 0.0047uF 5% 100V
C210	1-130-477-00	s	MYLAR 0.0033uF 5% 50V
C211	1-130-472-00	s	MYLAR 0.0012uF 5% 50V
C213	1-130-483-00	s	MYLAR 0.01uF 5% 50V
C214	1-130-734-00	s	FILM 0.0068uF 5% 50V
C215	1-130-734-00	s	FILM 0.0068uF 5% 50V
C216	1-130-734-00	s	FILM 0.0068uF 5% 50V
C217	1-130-734-00	s	FILM 0.0068uF 5% 50V
C218	1-130-475-00	s	MYLAR 0.0022uF 5% 50V
C220	1-130-728-00	s	FILM 0.0022uF 1% 100V
C222	1-130-728-00	s	FILM 0.0022uF 1% 100V
CN207	1-506-748-11	s	CONNECTOR, DIN 96P, MALE
D5	8-719-800-76	s	DIODE 1SS226
D6	8-719-800-76	s	DIODE 1SS226
D7	8-719-800-76	s	DIODE 1SS226
D8	8-719-800-76	s	DIODE 1SS226
D201	8-719-800-76	s	DIODE 1SS226
D202	8-719-800-76	s	DIODE 1SS226
IC1	8-759-008-71	s	IC UPC324C
IC2	8-759-908-92	s	IC TL084CNS
IC3	8-759-908-92	s	IC TL084CNS
IC4	8-759-700-58	s	IC NJM4558D-FA
IC5	8-759-908-92	s	IC TL084CNS
IC6	8-759-908-92	s	IC TL084CNS
IC7	8-759-981-65	s	IC LM2903M
IC8	8-759-981-65	s	IC LM2903M
IC10	8-759-910-43	s	IC CX23028
IC11	8-759-009-07	s	IC MC14053BF
IC201	8-743-915-10	s	IC BX3915A
IC202	8-759-009-07	s	IC MC14053BF
IC203	8-759-009-51	s	IC MC14538BF
IC204	8-759-008-82	s	IC MC14013BF
IC205	8-759-009-19	s	IC MC14081BF

(SV-121 BOARD)

Ref. No. or Q'ty	Part No.	SP	Description
IC206	8-759-981-65	s	IC LM2903M
IC207	8-759-009-51	s	IC MC14538BF
IC208	8-759-008-92	s	IC MC14024BF
IC209	8-759-008-92	s	IC MC14024BF
IC210	8-759-981-65	s	IC LM2903M
IC211	8-759-008-79	s	IC MC14011BF
IC212	8-759-008-79	s	IC MC14011BF
IC213	8-759-008-82	s	IC MC14013BF
IC214	8-759-907-81	s	IC SN74LS221NS
IC215	8-759-907-81	s	IC SN74LS221NS
IC216	8-759-008-82	s	IC MC14013BF
IC217	8-759-008-82	s	IC MC14013BF
IC218	8-759-907-81	s	IC SN74LS221NS
IC219	8-759-009-07	s	IC MC14053BF
IC220	8-759-926-21	s	IC SN74HC161NS
IC221	8-759-207-74	s	IC TC4030BFHB
IC222	8-759-926-97	s	IC SN74HC4024NS
IC223	8-759-009-51	s	IC MC14538BF
IC224	8-759-009-07	s	IC MC14053BF
IC225	8-759-207-74	s	IC TC4030BFHB
L1	1-410-476-11	s	INDUCTOR 33uH
L2	1-410-476-11	s	INDUCTOR 33uH
L3	1-410-476-11	s	INDUCTOR 33uH
L4	1-410-476-11	s	INDUCTOR 33uH
Q2	8-729-202-38	s	TRANSISTOR 2SC3326N
Q3	8-729-202-38	s	TRANSISTOR 2SC3326N
Q4	8-729-202-38	s	TRANSISTOR 2SC3326N
Q5	8-729-202-38	s	TRANSISTOR 2SC3326N
Q8	8-729-202-38	s	TRANSISTOR 2SC3326N
Q9	8-729-122-63	s	TRANSISTOR 2SA1226
R4	1-216-651-11	s	METAL, CHIP 1K 0.5% 1/10W
R5	1-216-666-11	s	METAL, CHIP 4.3K 0.5% 1/10W
R6	1-216-681-11	s	METAL, CHIP 18K 0.5% 1/10W
R7	1-216-681-11	s	METAL, CHIP 18K 0.5% 1/10W
R15	1-216-667-11	s	METAL, CHIP 4.7K 0.5% 1/10W
R217	1-216-674-11	s	METAL, CHIP 9.1K 0.5% 1/10W
R232	1-216-667-11	s	METAL, CHIP 4.7K 0.5% 1/10W
R233	1-216-667-11	s	METAL, CHIP 4.7K 0.5% 1/10W
R234	1-216-667-11	s	METAL, CHIP 4.7K 0.5% 1/10W
R235	1-216-667-11	s	METAL, CHIP 4.7K 0.5% 1/10W
#R263	1-216-295-00	s	METAL, CHIP 0- OHM
RV1	1-224-935-00	s	RES, VAR METAL 200
RV2	1-237-512-21	s	RES, ADJ, METAL 100
RV3	1-237-520-21	s	RES, ADJ, METAL 50K
RV4	1-237-518-21	s	RES, ADJ, METAL 10K
RV8	1-237-519-21	s	RES, ADJ, METAL 20K
RV9	1-237-518-21	s	RES, ADJ, METAL 10K
RV10	1-237-518-21	s	RES, ADJ, METAL 10K
RV11	1-237-518-21	s	RES, ADJ, METAL 10K
RV12	1-237-518-21	s	RES, ADJ, METAL 10K
RV13	1-237-518-21	s	RES, ADJ, METAL 10K
RV15	1-237-521-21	s	RES, ADJ, METAL 100K
RV16	1-237-521-21	s	RES, ADJ, METAL 100K
RV201	1-237-506-21	s	RES, ADJ, METAL 100K
RV202	1-237-506-21	s	RES, ADJ, METAL 100K

NOTE: Please see pages 19-51 and 19-52 for the parts that are not listed in the part list.

(SV-121 BOARD)

Ref. No. or Q'ty	Part No.	SP	Description
RV203	1-237-506-21	s	RES, ADJ, METAL 100K
RV204	1-237-506-21	s	RES, ADJ, METAL 100K
RV206	1-237-265-11	s	RES, VAR METAL 200K
RV207	1-237-506-21	s	RES, ADJ, METAL 100K
RV210	1-237-520-21	s	RES, ADJ, METAL 50K
S1	1-553-572-00	s	SWITCH, DIP 4-CKT

SV-122 BOARD

Ref. No. or Q'ty	Part No.	SP	Description
1pc	A-6715-443-A	o	MOUNTED CIRCUIT BOARD, SV-122
2pcs	7-622-207-05	s	N 2.6, TYPE 2
2pcs	7-628-254-30	s	SCREW +PS 2.6X10
C1	1-126-154-11	s	ELECT 47uF 20% 6.3V
C2	1-126-154-11	s	ELECT 47uF 20% 6.3V
C6	1-130-495-00	s	MYLAR 0.1uF 5% 50V
C9	1-130-495-00	s	MYLAR 0.1uF 5% 50V
C12	1-130-030-91	s	FILM 0.01uF 5% 50V
C13	1-130-483-00	s	MYLAR 0.01uF 5% 50V
C14	1-131-344-00	s	TANTALUM 0.33uF 10% 35V
C15	1-131-344-00	s	TANTALUM 0.33uF 10% 35V
C29	1-126-154-11	s	ELECT 47uF 20% 6.3V
C30	1-126-154-11	s	ELECT 47uF 20% 6.3V
C100	1-124-234-00	s	ELECT 22uF 20% 16V
C101	1-131-388-00	s	TANTALUM 68uF 10% 6.3V
C102	1-131-388-00	s	TANTALUM 68uF 10% 6.3V
C103	1-130-483-00	s	MYLAR 0.01uF 5% 50V
C104	1-130-483-00	s	MYLAR 0.01uF 5% 50V
C108	1-130-471-00	s	MYLAR 0.001uF 5% 50V
C109	1-130-471-00	s	MYLAR 0.001uF 5% 50V
C110	1-130-483-00	s	MYLAR 0.01uF 5% 50V
C113	1-131-341-00	s	TANTALUM 0.1uF 10% 35V
C114	1-130-495-00	s	MYLAR 0.1uF 5% 50V
C116	1-124-254-00	s	ELECT 0.68uF 20% 50V
C117	1-124-254-00	s	ELECT 0.68uF 20% 50V
C118	1-131-360-00	s	TANTALUM 15uF 10% 25V
C119	1-131-360-00	s	TANTALUM 15uF 10% 25V
C125	1-131-352-00	s	TANTALUM 6.8uF 10% 35V
C126	1-131-352-00	s	TANTALUM 6.8uF 10% 35V
C216	1-124-438-00	s	ELECT 1uF 20% 50V
C217	1-124-438-00	s	ELECT 1uF 20% 50V
C218	1-130-477-00	s	MYLAR 0.0033uF 5% 50V
C220	1-130-477-00	s	MYLAR 0.0033uF 5% 50V
C222	1-130-496-00	s	MYLAR 0.12uF 5% 50V
C223	1-130-475-00	s	MYLAR 0.0022uF 5% 50V
C224	1-130-498-00	s	MYLAR 0.18uF 5% 50V
C225	1-130-471-00	s	MYLAR 0.001uF 5% 50V
C230	1-130-030-91	s	FILM 0.01uF 5% 50V
C231	1-130-483-00	s	MYLAR 0.01uF 5% 50V
C232	1-130-475-00	s	MYLAR 0.0022uF 5% 50V
C233	1-130-498-00	s	MYLAR 0.18uF 5% 50V
C234	1-130-471-00	s	MYLAR 0.001uF 5% 50V
C235	1-124-257-00	s	ELECT 2.2uF 20% 50V
CN208	1-506-748-11	s	CONNECTOR, DIN 96P, MALE
D1	8-719-800-76	s	DIODE 1SS226
D2	8-719-800-76	s	DIODE 1SS226
D4	8-719-800-76	s	DIODE 1SS226
D5	8-719-800-76	s	DIODE 1SS226
D100	8-719-800-76	s	DIODE 1SS226
D101	8-719-800-76	s	DIODE 1SS226
D102	8-719-800-76	s	DIODE 1SS226
D103	8-719-800-76	s	DIODE 1SS226
D104	8-719-800-76	s	DIODE 1SS226
D105	8-719-800-76	s	DIODE 1SS226
D204	8-719-800-76	s	DIODE 1SS226

NOTE: Please see pages 19-51 and 19-52 for the parts that are not listed in the part list.

(SV-122 BOARD)

Ref. No. or Q'ty	Part No.	SP	Description
D205	8-719-800-76	s	DIODE 1SS226
D206	8-719-800-76	s	DIODE 1SS226
IC1	8-759-981-65	s	IC LM2903M
IC2	8-759-908-92	s	IC TL084CNS
IC3	8-759-908-92	s	IC TL084CNS
IC4	8-759-981-65	s	IC LM2903M
IC5	8-759-009-51	s	IC MC14538BF
IC6	8-759-009-07	s	IC MC14053BF
IC7	8-759-910-43	s	IC CX23028
IC8	8-759-008-79	s	IC MC14011BF
IC100	8-759-981-90	s	IC NJM4558D-D
IC101	8-743-914-00	s	IC BX3914
IC102	8-759-009-07	s	IC MC14053BF
IC103	8-759-009-07	s	IC MC14053BF
IC104	8-759-009-07	s	IC MC14053BF
IC105	8-759-009-51	s	IC MC14538BF
IC106	8-759-008-74	s	IC MC14001BF
IC107	8-759-009-12	s	IC MC14071BF
IC108	8-759-009-51	s	IC MC14538BF
IC109	8-759-907-81	s	IC SN74LS221NS
IC110	8-759-908-17	s	IC TL082CPS
IC111	8-759-009-51	s	IC MC14538BF
IC112	8-759-201-53	s	IC TC40H000F
IC113	8-759-201-53	s	IC TC40H000F
IC114	8-759-926-37	s	IC SN74HC193NS
IC115	8-759-926-37	s	IC SN74HC193NS
IC116	8-759-931-57	s	IC SN74LS685NS
IC117	8-759-938-68	s	IC CXD1095Q
IC118	8-759-008-36	s	IC TC74HC4049AF
IC119	8-759-925-90	s	IC SN74HC74NS
IC120	8-759-925-85	s	IC SN74HC32NS
IC201	8-759-981-65	s	IC LM2903M
IC203	8-759-009-07	s	IC MC14053BF
IC204	8-759-908-17	s	IC TL082CPS
IC205	8-759-987-41	s	IC SN74HC4066NS
L1	1-410-476-11	s	INDUCTOR 33uH
L2	1-410-476-11	s	INDUCTOR 33uH
L3	1-410-476-11	s	INDUCTOR 33uH
L4	1-410-476-11	s	INDUCTOR 33uH
Q1	8-729-202-38	s	TRANSISTOR 2SC3326N
Q2	8-729-202-38	s	TRANSISTOR 2SC3326N
Q3	8-729-202-38	s	TRANSISTOR 2SC3326N
Q4	8-729-901-01	s	TRANSISTOR DTC144EK
Q5	8-729-901-01	s	TRANSISTOR DTC144EK
Q100	8-729-901-01	s	TRANSISTOR DTC144EK
Q101	8-729-216-22	s	TRANSISTOR 2SA1162
Q102	8-729-122-63	s	TRANSISTOR 2SA1226
Q103	8-729-901-01	s	TRANSISTOR DTC144EK
Q106	8-729-901-01	s	TRANSISTOR DTC144EK
Q107	8-729-901-01	s	TRANSISTOR DTC144EK
Q108	8-729-901-01	s	TRANSISTOR DTC144EK
Q109	8-729-202-38	s	TRANSISTOR 2SC3326N
Q110	8-729-901-01	s	TRANSISTOR DTC144EK
Q111	8-729-202-38	s	TRANSISTOR 2SC3326N
Q113	8-729-901-01	s	TRANSISTOR DTC144EK

(SV-122 BOARD)

Ref. No. or Q'ty	Part No.	SP	Description
R20	1-216-691-11	s	METAL, CHIP 47K 0.5% 1/10W
R21	1-216-663-11	s	METAL, CHIP 3.3K 0.5% 1/10W
R22	1-216-671-11	s	METAL, CHIP 6.8K 0.5% 1/10W
R105	1-216-646-11	s	METAL, CHIP 620 0.5% 1/10W
R142	1-216-659-11	s	METAL, CHIP 2.2K 0.5% 1/10W
R270	1-216-691-11	s	METAL, CHIP 47K 0.5% 1/10W
R271	1-216-663-11	s	METAL, CHIP 3.3K 0.5% 1/10W
R272	1-216-675-11	s	METAL, CHIP 10K 0.5% 1/10W
RV1	1-237-518-21	s	RES, ADJ, METAL 10K
RV2	1-237-518-21	s	RES, ADJ, METAL 10K
RV3	1-237-518-21	s	RES, ADJ, METAL 10K
RV4	1-237-522-21	s	RES, ADJ, METAL 200K
RV100	1-237-522-21	s	RES, ADJ, METAL 200K
RV101	1-237-520-21	s	RES, ADJ, METAL 50K
RV202	1-237-503-21	s	RES, ADJ, METAL 10K
RV203	1-237-517-21	s	RES, ADJ, METAL 5K

NOTE: Please see pages 19-51 and 19-52 for the parts that are not listed in the part list.

SW-144P BOARD

Ref. No. or Q'ty	Part No.	SP	Description
1pc	1-622-573-14	o	PRINTED CIRCUIT BOARD, SW-144
1pc	3-717-474-02	o	HOLDER, LED
CN511	1-506-477-11	s	CONNECTOR, 12P, MALE
CN512	1-506-475-11	s	CONNECTOR, 10P, MALE
CN513	1-506-467-11	s	CONNECTOR, 2P, MALE
CN514	1-506-467-11	s	CONNECTOR, 2P, MALE
CN516	1-506-470-11	s	CONNECTOR, 5P, MALE
D1	8-719-820-28	s	LED TLG-256, GRN
D2	8-719-820-28	s	LED TLG-256, GRN
D3	8-719-820-27	s	LED TLY-256, YEL
D4	8-719-820-27	s	LED TLY-256, YEL
D5	8-719-820-28	s	LED TLG-256, GRN
D7	8-719-820-28	s	LED TLG-256, GRN
D9	8-719-820-28	s	LED TLG-256, GRN
D10	8-719-820-28	s	LED TLG-256, GRN
D11	8-719-911-19	s	DIODE 1SS119
D12	8-719-820-28	s	LED TLG-256, GRN
Q1	8-729-900-63	s	TRANSISTOR DTA124ES
Q2	8-729-900-63	s	TRANSISTOR DTA124ES
Q3	8-729-900-36	s	TRANSISTOR DTC124ES
R1	1-249-410-11	s	CARBON 270 5% 1/4W
R3	1-247-706-11	s	CARBON 330 5% 1/4W
R4	1-247-706-11	s	CARBON 330 5% 1/4W
R5	1-247-706-11	s	CARBON 330 5% 1/4W
R6	1-247-706-11	s	CARBON 330 5% 1/4W
R17	1-247-710-11	s	CARBON 560 5% 1/4W
S1	1-516-995-00	s	SWITCH, LEVER SLIDE
S2	1-516-995-00	s	SWITCH, LEVER SLIDE
S3	1-516-995-00	s	SWITCH, LEVER SLIDE
S4	1-516-995-00	s	SWITCH, LEVER SLIDE
S5	1-516-961-00	s	SWITCH, LEVER SLIDE
S6	1-516-995-00	s	SWITCH, LEVER SLIDE

SWG REG UR-21

Ref. No. or Q'ty	Part No.	SP	Description
1pc	1-413-307-23	s	SWITCHING REGULATOR UR-21B

This switching regulator composed of C1, C2, M1 and M2 boards.

M201	⚠ 1-541-524-11	s	MOTOR, DC FAN

C1 BOARD

C51	1-161-925-00	s	CERAMIC 100PF 10% 500V
C52	1-161-925-00	s	CERAMIC 100PF 10% 500V
C53	1-131-416-00	s	TANTALUM 1.5 20% 16V
C55	1-130-471-00	s	MYLAR 0.001uF 5% 50V
C56	1-136-165-00	s	FILM 0.1uF 5% 50V
C57	1-130-473-00	s	MYLAR 0.0015uF 5% 50V
C59	1-136-165-00	s	FILM 0.1uF 5% 50V
C61	1-124-791-11	s	ELECT 1uF 20% 50V
CN52	1-564-352-11	o	PIN, CONNECTOR 7P
CN53	1-564-352-11	o	PIN, CONNECTOR 7P
D51	8-719-210-21	s	DIODE 11EQS04
D52	8-719-210-21	s	DIODE 11EQS04
D53	8-719-210-21	s	DIODE 11EQS04
D54	1-807-913-21	s	DIODE 11EQS04
D55	8-719-911-19	s	DIODE 1SS119
D56	8-719-911-19	s	DIODE 1SS119
D57	8-719-109-93	s	DIODE RD6.2ES-B2
D58	8-719-107-87	s	DIODE 03P2M
D59	8-719-911-19	s	DIODE 1SS119
D60	8-719-911-19	s	DIODE 1SS119
D61	8-719-911-19	s	DIODE 1SS119
D62	8-719-911-19	s	DIODE 1SS119
D63	8-719-109-75	s	DIODE RD4.3ES-B2
IC51	8-759-937-59	s	IC MB3759
IC52	8-759-103-93	s	IC UPC393C
Q51	8-729-208-04	s	TRANSISTOR 2SK422
Q52	8-729-208-04	s	TRANSISTOR 2SK422
Q53	8-729-119-76	s	TRANSISTOR 2SA1115P
Q54	8-729-119-78	s	TRANSISTOR 2SC2785-HFE
Q55	8-729-119-76	s	TRANSISTOR 2SA1115P
R51	1-249-410-11	s	CARBON 270 5% 1/4W
R52	1-249-416-11	s	CARBON 820 5% 1/4W
R53	1-249-414-11	s	CARBON 560 5% 1/4W
R54	1-249-414-11	s	CARBON 560 5% 1/4W
R57	1-249-413-11	s	CARBON 470 5% 1/4W
R58	1-249-439-11	s	CARBON 68K 5% 1/4W
R60	1-249-419-11	s	CARBON 1.5K 5% 1/4W
R61	1-249-426-11	s	CARBON 5.6K 5% 1/4W
R66	1-249-436-11	s	CARBON 39K 5% 1/4W
R70	1-249-426-11	s	CARBON 5.6K 5% 1/4W
R73	1-249-422-11	s	CARBON 2.7K 5% 1/4W
R79	1-249-426-11	s	CARBON 5.6K 5% 1/4W
R82	1-249-434-11	s	CARBON 27K 5% 1/4W
R83	1-249-430-11	s	CARBON 12K 5% 1/4W
R84	1-249-412-11	s	CARBON 390 5% 1/4W
RV51	1-228-990-00	s	RES, ADJ, METAL 1K

C2 BOARD

NOTE: Please see pages 19-51 and 19-52 for the parts that are not listed in the part list.

(SWG REG UR-21)

Ref. No. or Q'ty	Part No.	SP	Description
C51	1-161-925-00	s	CERAMIC 100PF 10% 500V
C52	1-161-925-00	s	CERAMIC 100PF 10% 500V
C53	1-131-416-00	s	TANTALUM 1.5 20% 16V
C56	1-136-165-00	s	FILM 0.1uF 5% 50V
C57	1-130-473-00	s	MYLAR 0.0015uF 5% 50V
C59	1-136-165-00	s	FILM 0.1uF 5% 50V
CN52	1-564-352-11	o	PIN, CONNECTOR 7P
CN53	1-564-352-11	o	PIN, CONNECTOR 7P
D51	8-719-210-21	s	DIODE 11EQS04
D52	8-719-210-21	s	DIODE 11EQS04
D53	8-719-210-21	s	DIODE 11EQS04
D54	1-807-913-21	s	DIODE 11EQS04
D55	8-719-911-19	s	DIODE 1SS119
D56	8-719-911-19	s	DIODE 1SS119
D57	8-719-110-41	s	DIODE RD15ES-B2
D58	8-719-107-87	s	DIODE 03P2M
D59	8-719-911-19	s	DIODE 1SS119
D60	8-719-911-19	s	DIODE 1SS119
D61	8-719-911-19	s	DIODE 1SS119
D62	8-719-911-19	s	DIODE 1SS119
D63	8-719-110-22	s	DIODE RD11ES-B2
IC51	8-759-937-59	s	IC MB3759
IC52	8-759-103-93	s	IC UPC393C
Q51	8-729-208-04	s	TRANSISTOR 2SK422
Q52	8-729-208-04	s	TRANSISTOR 2SK422
Q53	8-729-119-76	s	TRANSISTOR 2SA1115P
Q54	8-729-119-78	s	TRANSISTOR 2SC2785-HFE
Q55	8-729-119-76	s	TRANSISTOR 2SA1115P
R52	1-249-416-11	s	CARBON 820 5% 1/4W
R53	1-249-414-11	s	CARBON 560 5% 1/4W
R54	1-249-414-11	s	CARBON 560 5% 1/4W
R57	1-249-413-11	s	CARBON 470 5% 1/4W
R58	1-249-440-11	s	CARBON 82K 5% 1/4W
R60	1-249-497-11	s	CARBON 7.5K 5% 1/4W
R61	1-249-434-11	s	CARBON 27K 5% 1/4W
R62	1-249-419-11	s	CARBON 1.5K 5% 1/4W
R66	1-249-436-11	s	CARBON 39K 5% 1/4W
R68	1-249-428-11	s	CARBON 8.2K 5% 1/4W
R70	1-249-426-11	s	CARBON 5.6K 5% 1/4W
R73	1-249-422-11	s	CARBON 2.7K 5% 1/4W
R81	1-249-426-11	s	CARBON 5.6K 5% 1/4W
RV51	1-228-990-00	s	RES, ADJ, METAL 1K
M1 BOARD			
C101	1-136-564-11	s	CERAMIC 1000PF 10% 500V
C102	1-136-564-11	s	CERAMIC 1000PF 10% 500V
C104	1-125-477-11	s	ELECT 470 20% 400V
C105	1-125-477-11	s	ELECT 470 20% 400V
C106	1-161-915-00	s	CERAMIC 1000PF 10% 500V
C107	1-161-915-00	s	CERAMIC 1000PF 10% 500V
C203	1-161-915-00	s	CERAMIC 1000PF 10% 500V
C204	1-161-915-00	s	CERAMIC 1000PF 10% 500V
C205	1-124-636-00	s	ELECT 3300 20% 25V

(SWG REG UR-21)

Ref. No. or Q'ty	Part No.	SP	Description
C206	1-136-153-00	s	FILM 0.01uF 5% 50V
C209	1-126-651-11	s	ELECT 10000 20% 6.3V
C211	1-130-772-00	s	FILM 0.22uF 5% 63V
C212	1-124-621-11	s	ELECT 3300 20% 6.3V
C213	1-130-772-00	s	FILM 0.22uF 5% 63V
C214	1-124-585-11	s	ELECT 3300 20% 10V
C221	1-136-155-00	s	FILM 0.015uF 5% 50V
C222	1-136-161-00	s	FILM 0.047uF 5% 50V
C223	1-136-161-00	s	FILM 0.047uF 5% 50V
C228	1-130-772-00	s	FILM 0.22uF 5% 63V
C229	1-130-772-00	s	FILM 0.22uF 5% 63V
C230	1-130-772-00	s	FILM 0.22uF 5% 63V
CN101 ⚠	1-564-242-00	o	CONNECTOR, 5P
CN201	1-564-932-11	o	CONNECTOR, 9P
CN202	1-560-893-00	o	CONNECTOR, 5P
CN203	1-560-299-00	o	CONNECTOR, IL 2P, MALE
CN204	1-560-890-00	o	CONNECTOR, 2P
D101	8-719-109-75	s	DIODE RD4.3ES-B2
D102	8-719-912-20	s	DIODE 1SS120
D103	8-719-210-21	s	DIODE 11EQS04
D104	8-719-210-21	s	DIODE 11EQS04
D201	1-807-774-11	s	DIODE AU02A
D202	8-719-109-85	s	DIODE RD5.1ES-B2
D203	8-719-109-85	s	DIODE RD5.1ES-B2
D204	8-719-911-19	s	DIODE 1SS119
D205	8-719-200-02	s	DIODE 10E2
D206	8-719-200-02	s	DIODE 10E2
D207	1-807-911-11	s	DIODE F10P40F
D208	8-719-200-01	s	DIODE 10E-1
D209	8-719-200-01	s	DIODE 10E-1
D210	8-719-302-60	s	DIODE FML-32S
D211	1-807-963-21	s	DIODE 31DF2
D212	1-807-963-21	s	DIODE 31DF2
D213	8-719-110-14	s	DIODE RD9.1ESB3
D214	1-807-911-21	s	DIODE F10P40FR
D215	8-719-912-20	s	DIODE 1SS120
D216	8-719-912-20	s	DIODE 1SS120
D220	8-719-200-01	s	DIODE 10E-1
D222	8-719-200-01	s	DIODE 10E-1
FB201	1-543-060-00	s	CORE
FB202	1-543-060-00	s	CORE
FB203	1-543-060-00	s	CORE
FB204	1-543-060-00	s	CORE
FB205	1-543-060-00	s	CORE
FB206	1-543-060-00	s	CORE
IC101	1-807-814-11	s	IC B-5272
IC201	8-759-135-80	s	IC UPC358C
IC202	8-759-908-15	s	IC TL431CLP
IC203	8-759-908-15	s	IC TL431CLP
L201	A-4935-038-A	s	COIL, CHOKE
L202	1-421-459-21	s	COIL, CHOKE
L203	A-4935-037-A	s	COIL, CHOKE
L204	1-421-459-00	s	COIL, CHOKE
L205	1-421-734-11	s	COIL, CHOKE

NOTE: Please see pages 19-51 and 19-52 for the parts that are not listed in the part list.

(SWG REG UR-21)

Ref. No. or Q'ty	Part No.	SP	Description
L206	1-421-459-00	s	COIL, CHOKE
L207	1-421-459-00	s	COIL, CHOKE
PS101 ⚠	1-532-605-00	s	LINK, IC 0.4A
PS102 ⚠	1-532-605-00	s	LINK, IC 0.4A
PS201 ⚠	1-532-605-00	s	LINK, IC 0.4A
Q101	1-807-858-11	s	TRANSISTOR IREP451
Q102	1-807-858-11	s	TRANSISTOR IREP451
Q103	8-729-113-32	s	TRANSISTOR 2SB733
Q104	8-729-113-32	s	TRANSISTOR 2SB733
Q201	8-729-103-43	s	TRANSISTOR 2SB734
Q202	8-729-178-54	s	TRANSISTOR 2SC2785-F
Q203	8-729-178-54	s	TRANSISTOR 2SC2785-F
Q204	8-729-178-54	s	TRANSISTOR 2SC2785-F
Q205	1-807-914-11	s	TRANSISTOR 2SA1443
Q206	8-729-177-43	s	TRANSISTOR 2SD774
Q207	1-807-914-11	s	TRANSISTOR 2SA1443
Q208	8-729-177-54	s	TRANSISTOR 2SA1175
Q209	1-807-915-11	s	TRANSISTOR 2SC3692-L
Q210	8-729-178-54	s	TRANSISTOR 2SC2785-F
R103 ⚠	1-247-692-11	s	CARBON 22 5% 1/4W
R104 ⚠	1-247-692-11	s	CARBON 22 5% 1/4W
R107 ⚠	1-205-622-00	s	WIREWOUND 33 5% 5W
R201	1-249-426-11	s	CARBON 5.6K 5% 1/4W
R202	1-249-420-11	s	CARBON 1.8K 5% 1/4W
R203	1-247-698-11	s	CARBON 68 5% 1/4W
R206	1-249-422-11	s	CARBON 2.7K 5% 1/4W
R207	1-249-426-11	s	CARBON 5.6K 5% 1/4W
R210 ⚠	1-205-623-00	s	WIREWOUND 47 5% 5W
R212 ⚠	1-215-888-00	s	FILM 220 5% 2W
R216	1-215-451-00	s	METAL 18K 1% 1/6W
R220 ⚠	1-215-866-11	s	METAL 330 5% 1W
R221	1-247-696-11	s	CARBON 47 5% 1/4W
R223	1-249-420-11	s	CARBON 1.8K 5% 1/4W
R224	1-249-419-11	s	CARBON 1.5K 5% 1/4W
R225 ⚠	1-215-865-11	s	METAL 220 5% 1W
R226	1-249-422-11	s	CARBON 2.7K 5% 1/4W
R227	1-215-446-00	s	METAL 11K 1% 1/6W
R229	1-214-669-00	s	METAL 3.3 1% 1/4W
R230 ⚠	1-215-889-00	s	METAL 330 5% 2W
R231 ⚠	1-215-889-00	s	METAL 330 5% 2W
RV201	1-237-499-21	s	RES, ADJ, METAL 500
ST201	1-571-055-71	s	SWITCH, THERMAL REED
T101 ⚠	1-448-393-11	s	TRANSFORMER, CONVERTER
T102 ⚠	A-4935-035-A	s	TRANSFORMER, CONVERTER
T103 ⚠	1-421-819-11	s	TRANSFORMER, CURRENT
T104 ⚠	1-437-188-11	s	TRANSFORMER, DRIVE
T105 ⚠	1-437-188-11	s	TRANSFORMER, DRIVE
T106 ⚠	1-447-938-11	s	TRANSFORMER, CONVERTER

M2 BOARD

C151 ⚠	1-136-185-00	s	FILM 0.22uF 20% 250V
C152 ⚠	1-136-185-00	s	FILM 0.22uF 20% 250V

(SWG REG UR-21)

Ref. No. or Q'ty	Part No.	SP	Description
C154 ⚠	1-136-185-00	s	FILM 0.22uF 20% 250V
C155 ⚠	1-161-742-00	s	CERAMIC 0.0022uF 20% 400V
C156 ⚠	1-161-742-00	s	CERAMIC 0.0022uF 20% 400V
C157 ⚠	1-161-742-00	s	CERAMIC 0.0022uF 20% 400V
C158 ⚠	1-161-742-00	s	CERAMIC 0.0022uF 20% 400V
C159 ⚠	1-161-742-00	s	CERAMIC 0.0022uF 20% 400V
C161	1-136-564-11	s	CERAMIC 1000PF 10% 500V
C162	1-136-564-11	s	CERAMIC 1000PF 10% 500V
C163	1-161-915-00	s	CERAMIC 1000PF 10% 500V
C164	1-161-915-00	s	CERAMIC 1000PF 10% 500V
C165 ⚠	1-161-742-00	s	CERAMIC 0.0022uF 20% 400V
C166 ⚠	1-161-742-00	s	CERAMIC 0.0022uF 20% 400V
C167 ⚠	1-161-742-00	s	CERAMIC 0.0022uF 20% 400V
C251	1-161-915-00	s	CERAMIC 1000PF 10% 500V
C252	1-161-915-00	s	CERAMIC 1000PF 10% 500V
C253	1-124-556-11	s	ELECT 2200uF 20% 16V
C254	1-124-360-00	s	ELECT 1000uF 20% 16V
C255	1-124-790-11	s	ELECT 0.47 20% 100V
C256	1-124-898-11	s	ELECT 4700MF 20% 16V
C257	1-124-898-11	s	ELECT 4700MF 20% 16V
C258	1-124-898-11	s	ELECT 4700MF 20% 16V
C260	1-124-563-11	s	ELECT 2200 20% 25V
C263	1-136-155-00	s	FILM 0.015uF 5% 50V
C264	1-136-161-00	s	FILM 0.047uF 5% 50V
C265	1-136-161-00	s	FILM 0.047uF 5% 50V
C268	1-130-772-00	s	FILM 0.22uF 5% 63V
C269	1-130-772-00	s	FILM 0.22uF 5% 63V
C270	1-130-772-00	s	FILM 0.22uF 5% 63V
CN151 ⚠	1-564-215-11	s	PIN, CONNECTOR 4P
CN251	1-566-313-11	s	PIN, CONNECTOR 7P
CN252	1-560-893-11	s	PIN, CONNECTOR 5P
CN253	1-560-890-11	s	PIN, CONNECTOR 2P
D151 ⚠	1-807-907-11	s	DIODE KB088JLM
D153	1-807-913-21	s	DIODE 11EQS04
D154	1-807-913-21	s	DIODE 11EQS04
D251	1-807-909-11	s	DIODE F10P201
D252	1-807-921-11	s	DIODE FMG-34S
D253	1-807-911-21	s	DIODE F10P40FR
D254	8-719-109-97	s	DIODE RD6.8EB1
D255	8-719-912-20	s	DIODE 1SS120
D256	8-719-912-20	s	DIODE 1SS120
D257	8-719-200-01	s	DIODE 10E-1
D258	8-719-911-19	s	DIODE 1SS119
D260	8-719-912-20	s	DIODE 1SS120
F151 ⚠	1-532-604-21	s	FUSE, THERMAL 130-DEG-C
FB251	1-543-060-00	s	CORE
FB252	1-543-060-00	s	CORE
FB253	1-543-060-00	s	CORE
FB254	1-543-060-00	s	CORE
FB255	1-543-060-00	s	CORE
FB256	1-543-060-00	s	CORE
IC251	8-759-077-33	s	IC TL431CLP
L151 ⚠	1-421-590-00	s	FILTER, LINE

NOTE: Please see pages 19-51 and 19-52 for the parts that are not listed in the part list.

(SWG REG UR-21)

Ref. No. or Q'ty		Part No.	SP	Description
L152	⚠	1-421-978-11	s	FILTER, LINE
L251		A-4935-039-A	s	COIL, CHOKE
L252		1-421-459-00	s	COIL, CHOKE
L253		1-421-734-00	s	COIL, CHOKE
L254		1-408-322-00	s	COIL, CHOKE
L255		1-421-459-00	s	COIL, CHOKE
L512		1-421-978-11	s	FILTER, LINE
Q151		1-807-858-11	s	TRANSISTOR IREP451
Q152		1-807-858-11	s	TRANSISTOR IREP451
Q153		8-729-113-32	s	TRANSISTOR 2SB733
Q154		8-729-113-32	s	TRANSISTOR 2SB733
Q251		8-729-178-54	s	TRANSISTOR 2SC2785-F
Q252		1-807-915-11	s	TRANSISTOR 2SC3692-L
Q253		8-729-178-54	s	TRANSISTOR 2SC2785-F
R151		1-202-727-00	s	COMP 4.7 10% 1/2W
R152	⚠	1-205-915-11	s	WIREWOUND 4.7 10% 7W
R153	⚠	1-205-915-11	s	WIREWOUND 4.7 10% 7W
R154	⚠	1-247-692-11	s	CARBON 22 5% 1/4W
R155	⚠	1-247-692-11	s	CARBON 22 5% 1/4W
R158		1-205-652-00	s	WIREWOUND 68 5% 5W
R251		1-205-622-00	s	WIREWOUND 33 5% 5W
R252		1-249-419-11	s	CARBON 1.5K 5% 1/4W
R254	⚠	1-215-865-11	s	METAL 220 5% 1W
R258		1-214-669-00	s	METAL 3.3 1% 1/4W
R259	⚠	1-215-889-00	s	METAL 330 5% 2W
R260	⚠	1-215-889-00	s	METAL 330 5% 2W
RV251		1-237-500-21	s	RES, ADJ, METAL 1K
RY151	⚠	1-515-662-11	s	RELAY
ST251		1-571-055-71	s	SWITCH, THERMAL REED
T151	⚠	A-4935-036-A	s	TRANSFORMER, CONVERTER
T152	⚠	1-421-819-11	s	TRANSFORMER, CURRENT
T153	⚠	1-437-188-11	s	TRANSFORMER, DRIVE
T154	⚠	1-437-188-11	s	TRANSFORMER, DRIVE

SWG REG SOPS-1015

Ref. No. or Q'ty		Part No.	SP	Description
1pc	⚠	1-413-558-11	s	SWITCHING REGULATOR (SOPS-1015)
C101		1-136-212-12	s	FILM 0.1 20% 250V
C102		1-136-212-12	s	FILM 0.1 20% 250V
C105		1-125-633-11	s	ALUMN 180 20% 400V
C106		1-136-208-11	s	FILM 0.068 5% 630V
C107		1-124-910-11	s	ELECT 47uF 20% 50V
C109		1-130-479-00	s	MYLAR 0.0047uF 5% 50V
C110		1-161-741-00	s	CERAMIC 1000PF 20% AC400V
C111		1-161-741-00	s	CERAMIC 1000PF 20% AC400V
C112		1-161-741-00	s	CERAMIC 1000PF 20% AC400V
C113		1-161-741-00	s	CERAMIC 1000PF 20% AC400V
C114		1-136-742-11	s	FILM 0.1 5% 50V
C201		1-101-821-00	s	CERAMIC, 2200PF 500V
C202		1-101-810-00	s	CERAMIC, 100PF 5% 500V
C203		1-101-810-00	s	CERAMIC, 100PF 5% 500V
C204		1-101-821-00	s	CERAMIC, 2200PF 500V
C205		1-124-630-11	s	ELECT 1500uF 20% 25V
C206		1-128-141-11	s	ELECT 560 20% 25V
C207		1-124-760-11	s	ELECT 2200 20% 10V
C208		1-124-567-00	s	ELECT 1200 20% 10V
C209		1-124-760-11	s	ELECT 2200 20% 10V
C210		1-124-604-00	s	ELECT 330uF 20% 10V
C211		1-126-104-11	s	ELECT 470uF 20% 35V
C212		1-124-510-11	s	ELECT 220 20% 35V
C213		1-130-481-00	s	MYLAR 0.0068uF 5% 50V
C214		1-130-487-00	s	MYLAR 0.022uF 5% 50V
C215		1-136-745-11	s	FILM 0.47 5% 50V
C216		1-136-745-11	s	FILM 0.47 5% 50V
C217		1-136-745-11	s	FILM 0.47 5% 50V
C218		1-136-745-11	s	FILM 0.47 5% 50V
C219		1-101-821-00	s	CERAMIC, 2200PF 500V
C220		1-101-821-00	s	CERAMIC, 2200PF 500V
C221		1-136-744-11	s	FILM 0.22 5% 50V
C222		1-136-744-11	s	FILM 0.22 5% 50V
CN201		1-508-904-00	o	CONNECTOR, 6P, MALE
CN101		1-564-215-11	o	PIN, CONNECTOR 4P
D101		8-719-510-43	s	DIODE S1WB60B
D102		1-807-774-11	s	DIODE AU02A
D103		1-807-774-11	s	DIODE AU02A
D104		8-719-970-87	s	DIODE ERA38-06
D105		8-719-911-19	s	DIODE 1SS119
D106		8-719-110-78	s	DIODE RD33ES-B2
D107		8-719-110-57	s	DIODE RD22ES-B2
D201		8-719-510-39	s	DIODE D10LC20U
D202		8-719-510-09	s	DIODE D10SC6M
D203		8-719-310-56	s	DIODE FMB-29L
D204		8-719-510-39	s	DIODE D10LC20U
D205		8-719-110-44	s	DIODE RD16ES-B1
D206		8-719-109-88	s	DIODE RD5.6ES-B1
D207		8-719-911-19	s	DIODE 1SS119
D208		8-719-911-19	s	DIODE 1SS119
D209		8-719-911-19	s	DIODE 1SS119
D210		8-719-911-19	s	DIODE 1SS119
FB101		1-543-060-00	s	CORE

NOTE: Please see pages 19-51 and 19-52 for the parts that are not listed in the part list.

(SWG REG SOPS-1015)

Ref. No. or Q'ty	Part No.	SP	Description
FB102	1-543-060-00	s	CORE
FB103	1-543-060-00	s	CORE
FB201	1-543-060-00	s	CORE
FB202	1-543-060-00	s	CORE
FB203	1-543-060-00	s	CORE
FB204	1-543-060-00	s	CORE
FB205	1-543-060-00	s	CORE
FB206	1-543-060-00	s	CORE
FB207	1-543-060-00	s	CORE
FB208	1-543-060-00	s	CORE
IC101	1-809-086-31	s	IC CH-1015
IC102	8-719-801-22	s	IC TLP621
IC103	8-719-801-22	s	IC TLP621
IC201	8-749-920-43	s	IC SI-3050CA
IC202	8-749-921-99	s	IC SI-3120CA
IC203	8-759-908-15	s	IC TL431CLP
L101	1-421-915-11	s	FILTER, LINE
L201	1-424-255-11	s	COIL, CHOKE 10uH
L202	1-424-255-11	s	COIL, CHOKE 10uH
Q101	8-719-108-30	s	TRANSISTOR 3P4MH
Q102	8-729-923-35	s	TRANSISTOR IRFBC40
Q201	8-729-178-55	s	TRANSISTOR 2SC2785-E
R101	1-217-784-11	s	WIREWOUND 10 5% 5W
R103	1-247-735-11	s	CARBON 47 5% 1/2W
R104	1-218-642-11	s	METAL 100K 5% 1W
R105	1-215-902-11	s	METAL 47K 5% 2W
R106	1-247-883-00	s	CARBON 150K 5% 1/4W
R107	1-247-691-11	s	CARBON 18 5% 1/4W
R108	1-216-341-11	s	METAL 0.22 5% 1W
R109	1-249-400-11	s	CARBON 39 5% 1/4W
R111	1-249-419-11	s	CARBON 1.5K 5% 1/4W
R112	1-202-727-00	s	COMP 4.7 10% 1/2W
R113	1-218-642-11	s	METAL 100K 5% 1W
R114	1-215-902-11	s	METAL 47K 5% 2W
R116	1-249-436-11	s	CARBON 39K 5% 1/4W
R117	1-249-394-11	s	CARBON 12 5% 1/4W
R118	1-247-883-00	s	CARBON 150K 5% 1/4W
R119	1-247-883-00	s	CARBON 150K 5% 1/4W
R201	1-215-880-00	s	METAL 10 5% 2W
R204	1-215-880-00	s	METAL 10 5% 2W
R209	1-249-419-11	s	CARBON 1.5K 5% 1/4W
R210	1-249-413-11	s	CARBON 470 5% 1/4W
R212	1-249-428-11	s	CARBON 8.2K 5% 1/4W
R213	1-249-420-11	s	CARBON 1.8K 5% 1/4W
R214	1-249-419-11	s	CARBON 1.5K 5% 1/4W
R215	1-249-419-11	s	CARBON 1.5K 5% 1/4W
R216	1-249-419-11	s	CARBON 1.5K 5% 1/4W
RV201	1-228-990-00	s	RES, ADJ, METAL 1K
T101	1-450-201-11	s	TRANSFORMER, CONVERTER

SY-64P BOARD

Ref. No. or Q'ty	Part No.	SP	Description
1pc	A-6717-471-A	o	MOUNTED CIRCUIT BOARD, SY-64P
1pc	3-717-552-01	o	PLATE (LARGE),ORNAMENTAL,SLIDE
1pc	3-717-629-01	o	SHEET METAL (64P), ORNAMENTAL
1pc	7-621-759-45	s	+PSW, 2.6X6
4pcs	7-622-207-05	s	N 2.6, TYPE 2
4pcs	7-628-254-30	s	SCREW +PS 2.6X10
C1	1-126-103-11	s	ELECT 470uF 20% 16V
C2	1-161-055-00	s	CERAMIC 0.022uF 10% 50V
C3	1-124-135-00	s	ELECT 470uF 20% 6.3V
#C4	1-124-455-00	s	ELECT 100 20% 16V
C5	1-161-055-00	s	CERAMIC 0.022uF 10% 50V
C6	1-161-055-00	s	CERAMIC 0.022uF 10% 50V
C8	1-161-055-00	s	CERAMIC 0.022uF 10% 50V
C10	1-161-055-00	s	CERAMIC 0.022uF 10% 50V
C12	1-124-242-00	s	ELECT 33uF 20% 25V
C13	1-124-242-00	s	ELECT 33uF 20% 25V
C14	1-161-055-00	s	CERAMIC 0.022uF 10% 50V
C16	1-124-438-00	s	ELECT 1uF 20% 50V
C17	1-161-055-00	s	CERAMIC 0.022uF 10% 50V
C21	1-131-351-00	s	TANTALUM 4.7uF 10% 35V
C22	1-131-345-00	s	TANTALUM 0.47uF 10% 35V
C23	1-130-471-00	s	MYLAR 0.001uF 5% 50V
C24	1-130-475-00	s	MYLAR 0.0022uF 5% 50V
C25	1-102-106-00	s	CERAMIC 100PF 10% 50V
C27	1-102-951-00	s	CERAMIC 15PF 5% 50V
C28	1-102-947-00	s	CERAMIC 10PF 50V
C30	1-161-045-00	s	CERAMIC 0.0033uF 10% 50V
C31	1-161-055-00	s	CERAMIC 0.022uF 10% 50V
C36	1-130-488-00	s	MYLAR 0.027uF 5% 50V
C62	1-161-055-00	s	CERAMIC 0.022uF 10% 50V
C64	1-161-055-00	s	CERAMIC 0.022uF 10% 50V
C69	1-161-055-00	s	CERAMIC 0.022uF 10% 50V
C70	1-130-485-00	s	MYLAR 0.015uF 5% 50V
C71	1-124-465-00	s	ELECT 0.47uF 20% 50V
C72	1-162-889-11	s	CERAMIC 680PF 5% 50V
C73	1-130-471-00	s	MYLAR 0.001uF 5% 50V
C75	1-102-106-00	s	CERAMIC 100PF 10% 50V
C100	1-161-055-00	s	CERAMIC 0.022uF 10% 50V
C103	1-161-055-00	s	CERAMIC 0.022uF 10% 50V
C104	1-161-055-00	s	CERAMIC 0.022uF 10% 50V
C105	1-161-055-00	s	CERAMIC 0.022uF 10% 50V
C106	1-161-055-00	s	CERAMIC 0.022uF 10% 50V
C107	1-161-055-00	s	CERAMIC 0.022uF 10% 50V
C108	1-161-055-00	s	CERAMIC 0.022uF 10% 50V
C109	1-161-055-00	s	CERAMIC 0.022uF 10% 50V
C110	1-161-055-00	s	CERAMIC 0.022uF 10% 50V
C111	1-161-055-00	s	CERAMIC 0.022uF 10% 50V
C112	1-161-055-00	s	CERAMIC 0.022uF 10% 50V
C113	1-161-055-00	s	CERAMIC 0.022uF 10% 50V
C114	1-161-055-00	s	CERAMIC 0.022uF 10% 50V
C115	1-161-055-00	s	CERAMIC 0.022uF 10% 50V
C116	1-161-055-00	s	CERAMIC 0.022uF 10% 50V
C117	1-161-055-00	s	CERAMIC 0.022uF 10% 50V
C118	1-161-055-00	s	CERAMIC 0.022uF 10% 50V
C119	1-161-055-00	s	CERAMIC 0.022uF 10% 50V
C120	1-161-055-00	s	CERAMIC 0.022uF 10% 50V

NOTE: Please see pages 19-51 and 19-52 for the parts that are not listed in the part list.

(SY-64P BOARD)

Ref. No. or Q'ty	Part No.	SP	Description
C121	1-161-055-00	s	CERAMIC 0.022uF 10% 50V
C122	1-161-055-00	s	CERAMIC 0.022uF 10% 50V
C123	1-161-055-00	s	CERAMIC 0.022uF 10% 50V
C124	1-102-114-00	s	CERAMIC 470PF 10% 50V
C125	1-130-483-00	s	MYLAR 0.01uF 5% 50V
C126	1-161-055-00	s	CERAMIC 0.022uF 10% 50V
C301	1-130-491-00	s	MYLAR 0.047uF 5% 50V
C304	1-130-491-00	s	MYLAR 0.047uF 5% 50V
C306	1-161-055-00	s	CERAMIC 0.022uF 10% 50V
C307	1-130-481-00	s	MYLAR 0.0068uF 5% 50V
C308	1-130-728-00	s	FILM 0.0022uF 1% 100V
C309	1-162-712-11	s	CERAMIC 120PF 1% 50V
C310	1-102-947-00	s	CERAMIC 10PF 50V
C311	1-102-947-00	s	CERAMIC 10PF 50V
C313	1-162-712-11	s	CERAMIC 120PF 1% 50V
C316	1-162-712-11	s	CERAMIC 120PF 1% 50V
C325	1-161-055-00	s	CERAMIC 0.022uF 10% 50V
C326	1-161-055-00	s	CERAMIC 0.022uF 10% 50V
C327	1-161-055-00	s	CERAMIC 0.022uF 10% 50V
C328	1-161-055-00	s	CERAMIC 0.022uF 10% 50V
C329	1-161-055-00	s	CERAMIC 0.022uF 10% 50V
C330	1-161-055-00	s	CERAMIC 0.022uF 10% 50V
C331	1-161-055-00	s	CERAMIC 0.022uF 10% 50V
C332	1-161-055-00	s	CERAMIC 0.022uF 10% 50V
C333	1-161-055-00	s	CERAMIC 0.022uF 10% 50V
C335	1-161-055-00	s	CERAMIC 0.022uF 10% 50V
C336	1-161-055-00	s	CERAMIC 0.022uF 10% 50V
C338	1-161-055-00	s	CERAMIC 0.022uF 10% 50V
C339	1-161-055-00	s	CERAMIC 0.022uF 10% 50V
C340	1-161-055-00	s	CERAMIC 0.022uF 10% 50V
C351	1-161-055-00	s	CERAMIC 0.022uF 10% 50V
C352	1-102-106-00	s	CERAMIC 100PF 10% 50V
C399	1-130-728-00	s	FILM 0.0022uF 1% 100V
C401	1-136-298-00	s	FILM 0.0033uF 5% 100V
C402	1-130-495-00	s	MYLAR 0.1uF 5% 50V
C405	1-126-154-11	s	ELECT 47uF 20% 6.3V
C406	1-130-726-00	s	FILM 0.0015uF 1% 100V
C407	1-130-495-00	s	MYLAR 0.1uF 5% 50V
C409	1-162-722-11	s	CERAMIC 330PF 1% 50V
C410	1-126-154-11	s	ELECT 47uF 20% 6.3V
C411	1-130-471-00	s	MYLAR 0.001uF 5% 50V
C412	1-124-438-00	s	ELECT 1uF 20% 50V
C413	1-124-257-00	s	ELECT 2.2uF 20% 50V
#C415	1-161-772-11	s	CERAMIC 0.1 10% 25V
#CN303	1-568-144-11	s	CONNECTOR, DIN 96P, MALE
#CN304	1-568-144-11	s	CONNECTOR, DIN 96P, MALE
CN305	1-566-311-11	s	CONNECTOR, 10P, MALE
D2	8-719-200-02	s	DIODE 10E2
D3	8-719-200-02	s	DIODE 10E2
D4	8-719-200-02	s	DIODE 10E2
D5	8-719-200-02	s	DIODE 10E2
D6	8-719-200-02	s	DIODE 10E2
D17	8-719-200-02	s	DIODE 10E2
D18	8-719-200-02	s	DIODE 10E2
D19	8-719-911-19	s	DIODE 1SS119
D20	8-719-911-19	s	DIODE 1SS119

(SY-64P BOARD)

Ref. No. or Q'ty	Part No.	SP	Description
D21	8-719-911-19	s	DIODE 1SS119
D302	8-719-101-97	s	DIODE 1SS97-1
D303	8-719-101-97	s	DIODE 1SS97-1
D304	8-719-911-19	s	DIODE 1SS119
D305	8-719-911-19	s	DIODE 1SS119
D306	8-719-911-19	s	DIODE 1SS119
D307	8-719-911-19	s	DIODE 1SS119
IC1	8-743-430-00	s	IC BX343
IC2	8-759-800-72	s	IC LA7205
IC3	8-759-800-72	s	IC LA7205
IC4	8-759-114-14	s	IC UPD78312CW-608
IC5	8-759-990-82	s	IC TL082CP
IC6	8-759-000-25	s	IC MC14016BCP
IC7	8-759-990-82	s	IC TL082CP
IC9	8-759-947-43	s	IC TLC548IP
IC10	8-759-916-94	s	IC SN74HC373N
IC11	8-752-321-00	s	IC CXK5816PN-12L
IC12	8-759-340-46	s	IC HD14046BP
IC15	8-759-990-84	s	IC TL084CN
IC16	8-759-990-84	s	IC TL084CN
IC17	8-759-990-82	s	IC TL082CP
IC18	8-759-400-06	s	IC AN608P
IC19	8-759-912-64	s	IC PA0009
IC20	8-759-901-23	s	IC SN74LS123N
IC21	8-759-916-14	s	IC SN74HC04N
IC22	8-752-321-00	s	IC CXK5816PN-12L
IC23	8-759-916-71	s	IC SN74HC244N
IC24	8-759-909-16	s	IC CX7907A
IC25	8-759-901-23	s	IC SN74LS123N
IC26	8-759-240-50	s	IC TC4050BP
IC27	8-759-916-12	s	IC SN74HC00N
IC28	8-759-921-34	s	IC SN74HC245N
IC29	8-759-001-14	s	IC MC74HC58N
#IC30	8-759-234-04	s	IC TA7267BP
IC31	8-759-234-04	s	IC TA7267BP
IC32	8-759-045-38	s	IC MC14538BCP
IC33	8-759-803-70	s	IC SN74HC08N
IC34	8-759-916-25	s	IC SN74HC32N
IC35	8-759-240-01	s	IC TC4001BP
IC36	8-759-205-76	s	IC TC504013BP
IC37	8-759-600-34	s	IC M54532P
IC38	8-759-803-70	s	IC SN74HC08N
IC39	8-759-004-93	s	IC MC74HC4050N
IC40	8-759-938-68	s	IC CXD1095Q
IC41	8-759-803-70	s	IC SN74HC08N
IC42	8-752-321-00	s	IC CXK5816PN-12L
IC43	8-759-916-65	s	IC SN74HC240N
IC44	8-759-910-76	s	IC CX7913A
IC45	8-759-645-23	s	IC M54523P
IC46	8-759-938-68	s	IC CXD1095Q
IC47	8-759-938-68	s	IC CXD1095Q
IC48	8-759-916-14	s	IC SN74HC04N
IC49	8-752-321-00	s	IC CXK5816PN-12L
IC50	8-759-916-71	s	IC SN74HC244N
IC51	8-759-909-72	s	IC CX7912A
IC52	8-759-004-93	s	IC MC74HC4050N

NOTE: Please see pages 19-51 and 19-52 for the parts that are not listed in the part list.

(SY-64P BOARD)

Ref. No. or Q'ty	Part No.	SP	Description
IC53	8-759-205-76	s	IC TC504013BP
IC54	8-759-038-14	s	IC TC74HC4538AP
IC55	8-759-240-71	s	IC TC4071BP
L1	1-459-155-00	s	COIL 45uH
L2	1-408-425-00	s	INDUCTOR 220uH
L3	1-408-425-00	s	INDUCTOR 220uH
L4	1-408-418-00	s	INDUCTOR 56uH
L5	1-408-425-00	s	INDUCTOR 220uH
Q1	8-729-119-78	s	TRANSISTOR 2SC2785-HFE
Q2	8-729-119-76	s	TRANSISTOR 2SA1115P
Q4	8-729-119-78	s	TRANSISTOR 2SC2785-HFE
Q301	8-729-119-78	s	TRANSISTOR 2SC2785-HFE
R34	1-249-413-11	s	CARBON 470 5% 1/4W
R35	1-249-413-11	s	CARBON 470 5% 1/4W
R63	1-249-436-11	s	CARBON 39K 5% 1/4W
R74	1-249-411-11	s	CARBON 330 5% 1/4W
R76	1-249-413-11	s	CARBON 470 5% 1/4W
R89	1-249-430-11	s	CARBON 12K 5% 1/4W
R217	1-249-415-11	s	CARBON 680 5% 1/4W
R218	1-249-415-11	s	CARBON 680 5% 1/4W
R219	1-249-415-11	s	CARBON 680 5% 1/4W
R221	1-249-415-11	s	CARBON 680 5% 1/4W
R222	1-247-899-11	s	CARBON 680K 5% 1/4W
R223	1-249-426-11	s	CARBON 5.6K 5% 1/4W
R227	1-249-426-11	s	CARBON 5.6K 5% 1/4W
R228	1-249-428-11	s	CARBON 8.2K 5% 1/4W
R245	1-215-466-00	s	METAL 75K 1% 1/6W
R248	1-249-420-11	s	CARBON 1.8K 5% 1/4W
R310	1-249-440-11	s	CARBON 82K 5% 1/4W
R324	1-249-426-11	s	CARBON 5.6K 5% 1/4W
R344	1-215-440-00	s	METAL 6.2K 1% 1/6W
R361	1-249-385-11	s	CARBON 2.2 5% 1/4W
R362	1-249-385-11	s	CARBON 2.2 5% 1/4W
R363	1-215-453-00	s	METAL 22K 1% 1/6W
R364	1-215-460-00	s	METAL 43K 1% 1/6W
R365	1-215-463-00	s	METAL 56K 1% 1/6W
R366	1-215-448-00	s	METAL 13K 1% 1/6W
R398	1-215-421-00	s	METAL 1K 1% 1/6W
R401	1-215-456-00	s	METAL 30K 1% 1/6W
R403	1-215-462-00	s	METAL 51K 1% 1/6W
R405	1-249-440-11	s	CARBON 82K 5% 1/4W
R411	1-217-666-31	s	RES, SHORTING 0.01 1/6W
R412	1-217-666-31	s	RES, SHORTING 0.01 1/6W
RB301	1-231-387-00	s	COMPOSITION CIRCUIT BLOCK
RB302	1-231-387-00	s	COMPOSITION CIRCUIT BLOCK
S1	1-571-060-11	s	SWITCH, SLIDE
S2	1-570-707-11	s	SWITCH, SLIDE
S3	1-570-707-11	s	SWITCH, SLIDE
S4	1-570-707-11	s	SWITCH, SLIDE
S6	1-570-707-11	s	SWITCH, SLIDE
S7	1-570-707-11	s	SWITCH, SLIDE
X1	1-567-867-11	s	CRYSTAL, 14.500MHz
X301	1-527-828-00	s	CRYSTAL 12.00MHz

SY-151 BOARD

Ref. No. or Q'ty	Part No.	SP	Description
1pc	A-6717-582-A	o	MOUNTED CIRCUIT BOARD, SY-151
1pc	7-621-759-45	s	+PSW, 2.6X6
4pcs	7-622-207-05	s	N 2.6, TYPE 2
4pcs	7-628-254-30	s	SCREW +PS 2.6X10
C2	1-161-055-00	s	CERAMIC 0.022uF 10% 50V
C3	1-126-103-11	s	ELECT 470uF 20% 16V
C4	1-161-055-00	s	CERAMIC 0.022uF 10% 50V
C5	1-126-103-11	s	ELECT 470uF 20% 16V
C6	1-161-055-00	s	CERAMIC 0.022uF 10% 50V
C7	1-161-055-00	s	CERAMIC 0.022uF 10% 50V
C8	1-161-055-00	s	CERAMIC 0.022uF 10% 50V
C9	1-161-055-00	s	CERAMIC 0.022uF 10% 50V
C10	1-161-055-00	s	CERAMIC 0.022uF 10% 50V
C11	1-161-055-00	s	CERAMIC 0.022uF 10% 50V
C12	1-161-055-00	s	CERAMIC 0.022uF 10% 50V
C13	1-161-055-00	s	CERAMIC 0.022uF 10% 50V
C14	1-161-055-00	s	CERAMIC 0.022uF 10% 50V
C15	1-161-055-00	s	CERAMIC 0.022uF 10% 50V
C16	1-161-055-00	s	CERAMIC 0.022uF 10% 50V
C17	1-161-055-00	s	CERAMIC 0.022uF 10% 50V
C18	1-161-055-00	s	CERAMIC 0.022uF 10% 50V
C19	1-161-055-00	s	CERAMIC 0.022uF 10% 50V
C20	1-161-055-00	s	CERAMIC 0.022uF 10% 50V
C21	1-161-055-00	s	CERAMIC 0.022uF 10% 50V
C22	1-161-055-00	s	CERAMIC 0.022uF 10% 50V
C23	1-161-055-00	s	CERAMIC 0.022uF 10% 50V
C24	1-161-055-00	s	CERAMIC 0.022uF 10% 50V
C25	1-161-055-00	s	CERAMIC 0.022uF 10% 50V
C26	1-161-055-00	s	CERAMIC 0.022uF 10% 50V
C27	1-161-055-00	s	CERAMIC 0.022uF 10% 50V
C28	1-161-055-00	s	CERAMIC 0.022uF 10% 50V
C29	1-161-055-00	s	CERAMIC 0.022uF 10% 50V
C30	1-161-055-00	s	CERAMIC 0.022uF 10% 50V
C31	1-161-055-00	s	CERAMIC 0.022uF 10% 50V
C32	1-161-055-00	s	CERAMIC 0.022uF 10% 50V
C33	1-161-055-00	s	CERAMIC 0.022uF 10% 50V
C34	1-161-055-00	s	CERAMIC 0.022uF 10% 50V
C35	1-161-055-00	s	CERAMIC 0.022uF 10% 50V
C36	1-161-055-00	s	CERAMIC 0.022uF 10% 50V
C37	1-161-055-00	s	CERAMIC 0.022uF 10% 50V
C102	1-161-055-00	s	CERAMIC 0.022uF 10% 50V
C103	1-161-055-00	s	CERAMIC 0.022uF 10% 50V
C104	1-161-055-00	s	CERAMIC 0.022uF 10% 50V
C105	1-107-159-00	s	MICA 33PF 5% 500V
C106	1-107-159-00	s	MICA 33PF 5% 500V
C107	1-162-888-11	s	CERAMIC 560PF 5% 50V
C108	1-124-234-00	s	ELECT 22uF 20% 16V
C109	1-161-055-00	s	CERAMIC 0.022uF 10% 50V
C110	1-161-055-00	s	CERAMIC 0.022uF 10% 50V
C112	1-107-159-00	s	MICA 33PF 5% 500V
C202	1-161-055-00	s	CERAMIC 0.022uF 10% 50V
C203	1-161-055-00	s	CERAMIC 0.022uF 10% 50V
C204	1-161-055-00	s	CERAMIC 0.022uF 10% 50V
C205	1-107-202-00	s	MICA 10PF 5% 500V
C206	1-107-202-00	s	MICA 10PF 5% 500V
C207	1-107-202-00	s	MICA 10PF 5% 500V

NOTE: Please see pages 19-51 and 19-52 for the parts that are not listed in the part list.

(SY-151 BOARD)

Ref. No. or Q'ty	Part No.	SP	Description
C208	1-107-202-00	s	MICA 10PF 5% 500V
C209	1-107-169-00	s	MICA 100PF 5% 500V
C210	1-107-169-00	s	MICA 100PF 5% 500V
C211	1-161-055-00	s	CERAMIC 0.022uF 10% 50V
C212	1-124-438-00	s	ELECT 1uF 20% 50V
C213	1-124-438-00	s	ELECT 1uF 20% 50V
#C214	NOT IN USE		
C215	1-130-495-00	s	MYLAR 0.1uF 5% 50V
#C216	1-102-114-00	s	CERAMIC 470PF 10% 50V
C301	1-131-347-00	s	TANTALUM 1uF 10% 35V
C302	1-102-114-00	s	CERAMIC 470PF 10% 50V
C303	1-161-055-00	s	CERAMIC 0.022uF 10% 50V
C304	1-161-055-00	s	CERAMIC 0.022uF 10% 50V
C306	1-130-491-00	s	MYLAR 0.047uF 5% 50V
C307	1-130-491-00	s	MYLAR 0.047uF 5% 50V
C308	1-130-491-00	s	MYLAR 0.047uF 5% 50V
C309	1-102-106-00	s	CERAMIC 100PF 10% 50V
CN301	1-506-748-11	s	CONNECTOR, DIN 96P, MALE
CN302	1-506-748-11	s	CONNECTOR, DIN 96P, MALE
CNI6	1-526-659-00	o	SOCKET, IC 28P
CNI39	1-526-659-00	o	SOCKET, IC 28P
CV101	1-141-297-11	s	CAP, TRIMMER 90PF
CV102	1-141-245-00	s	CAP, TRIMMER 30PF
D101	8-719-800-60	s	LED TLR214, RED
D102	8-719-911-19	s	DIODE 1SS119
D103	8-719-911-19	s	DIODE 1SS119
D104	8-719-911-19	s	DIODE 1SS119
D201	8-719-911-19	s	DIODE 1SS119
D202	8-719-911-19	s	DIODE 1SS119
D203	8-719-911-19	s	DIODE 1SS119
D204	8-719-911-19	s	DIODE 1SS119
D205	8-719-911-19	s	DIODE 1SS119
D206	8-719-911-19	s	DIODE 1SS119
D301	8-719-911-19	s	DIODE 1SS119
D302	8-719-911-19	s	DIODE 1SS119
D303	8-719-911-19	s	DIODE 1SS119
IC1	8-759-902-44	s	IC SN74LS244N
IC2	8-759-902-45	s	IC SN74LS245N
IC3	8-759-902-44	s	IC SN74LS244N
IC4	8-759-942-11	s	IC MBM2212-20P
IC5	8-752-321-00	s	IC CXK5816PN-12L
IC6	8-759-739-36	s	IC C256A-BVW85PV1.00SY1
IC7	8-759-208-86	s	IC TMPZ84C011AF-6
IC8	8-759-917-18	s	IC SN74HCU04N
IC9	8-759-600-61	s	IC M54529AP
IC10	8-759-916-19	s	IC SN74HC11N
IC11	8-759-917-43	s	IC SN74HC138N
IC12	8-759-917-43	s	IC SN74HC138N
IC13	8-759-916-20	s	IC SN74HC14N
IC14	8-759-240-50	s	IC TC4050BP
IC15	8-759-040-53	s	IC MC14053BCP
IC16	8-759-001-63	s	IC MC74HC595N
IC17	8-759-004-84	s	IC MC74HC597N
IC18	8-759-982-21	s	IC RC78L05A

(SY-151 BOARD)

Ref. No. or Q'ty	Part No.	SP	Description
IC19	8-759-908-23	s	IC MB88303
IC20	8-759-926-30	s	IC AM26LS30PC
IC21	8-759-916-50	s	IC SN74HC157N
IC22	8-759-916-50	s	IC SN74HC157N
IC23	8-752-321-00	s	IC CXK5816PN-12L
IC24	8-759-917-18	s	IC SN74HCU04N
IC25	8-759-981-64	s	IC LM2903DQ
IC26	8-759-008-57	s	IC MC34051P
IC27	8-759-208-86	s	IC TMPZ84C011AF-6
IC28	8-759-921-34	s	IC SN74HC245N
IC29	8-759-921-34	s	IC SN74HC245N
IC30	8-759-996-53	s	IC TMPZ84C30AP-6
IC31	8-759-600-61	s	IC M54529AP
IC32	8-759-600-61	s	IC M54529AP
IC33	8-759-040-70	s	IC MC14070BCP
IC34	8-759-803-70	s	IC SN74HC08N
IC35	8-759-906-97	s	IC SN74LS697N
IC36	8-759-906-97	s	IC SN74LS697N
IC37	8-759-600-61	s	IC M54529AP
IC38	8-759-938-68	s	IC CXD1095Q
#IC39	8-759-709-06	s	IC C512-BVW85PV1.01SY2
IC40	8-752-328-11	s	IC CXK5864BP-12L
IC41	8-759-208-42	s	IC TMPZ84C40AP-6
IC42	8-759-916-25	s	IC SN74HC32N
IC43	8-759-916-25	s	IC SN74HC32N
IC44	8-759-916-12	s	IC SN74HC00N
IC45	8-759-603-32	s	IC M51958BL
IC46	8-759-803-70	s	IC SN74HC08N
IC47	8-759-045-38	s	IC MC14538BCP
IC48	8-759-240-69	s	IC TC4069UBP
IC49	8-759-001-14	s	IC MC74HC58N
IC50	8-759-916-25	s	IC SN74HC32N
IC51	8-759-917-18	s	IC SN74HCU04N
IC52	8-759-916-46	s	IC SN74HC139N
IC53	8-759-921-08	s	IC SN74HC02N
IC54	8-759-103-27	s	IC UPD8251AFC
IC56	8-759-203-48	s	IC TC74HC573P
IC57	8-759-600-61	s	IC M54529AP
L1	1-459-155-00	s	COIL 45uH
L101	1-408-408-00	s	INDUCTOR 8.2uH
R141	1-249-413-11	s	CARBON 470 5% 1/4W
R142	1-249-413-11	s	CARBON 470 5% 1/4W
R147	1-249-392-11	s	CARBON 8.2 5% 1/4W
R148	1-249-413-11	s	CARBON 470 5% 1/4W
R222	1-249-430-11	s	CARBON 12K 5% 1/4W
R249	1-215-459-00	s	METAL 39K 1% 1/6W
R250	1-215-450-00	s	METAL 16K 1% 1/6W
R285	1-249-435-11	s	CARBON 33K 5% 1/4W
#R290	1-246-523-00	s	CARBON 120K 5% 1/4W
#R291	1-249-435-11	s	CARBON 33K 5% 1/4W
RB101	1-235-193-00	s	RESISTOR BLOCK 2.2KX8
RB102	1-235-193-00	s	RESISTOR BLOCK 2.2KX8
RB103	1-235-193-00	s	RESISTOR BLOCK 2.2KX8
RB104	1-231-525-00	s	RESISTOR BLOCK 4.7Kx4
S101	1-570-707-11	s	SWITCH, SLIDE

NOTE: Please see pages 19-51 and 19-52 for the parts that are not listed in the part list.

(SY-151 BOARD)

Ref. No. or Q'ty	Part No.	SP	Description
S102	1-553-812-00	s	SWITCH, PUSH
S103	1-553-812-00	s	SWITCH, PUSH
S105	1-553-812-00	s	SWITCH, PUSH
S106	1-552-509-00	s	SWITCH, DIP 1-CKT
S201	1-570-707-11	s	SWITCH, SLIDE
S202	1-570-707-11	s	SWITCH, SLIDE
S203	1-570-623-11	s	SWITCH, DIP 8-CKT
S204	1-570-623-11	s	SWITCH, DIP 8-CKT
S206	1-553-812-00	s	SWITCH, PUSH
S302	1-552-509-00	s	SWITCH, DIP 1-CKT
X1	1-567-869-11	s	RESONATOR, CERAMIC 9.83MHz
X2	1-567-870-11	s	RESONATOR, CERAMIC 614KHz

TBC-7D BOARD

Ref. No. or Q'ty	Part No.	SP	Description
1pc	A-6727-094-A	o	MOUNTED CIRCUIT BOARD, TBC-7D
1pc	7-621-759-45	s	+PSW, 2.6X6
4pcs	7-622-207-05	s	N 2.6, TYPE 2
4pcs	7-628-254-30	s	SCREW +PS 2.6X10
C105	1-135-076-21	s	TANTALUM, CHIP 1uF 10% 35V
C109	1-124-478-11	s	ELECT 100uF 20% 25V
C114	1-124-478-11	s	ELECT 100uF 20% 25V
C133	1-163-083-00	s	CERAMIC, CHIP 1PF 50V
C134	1-163-083-00	s	CERAMIC, CHIP 1PF 50V
C136	1-107-085-00	s	MICA 100PF 5% 50V
C200	1-163-097-00	s	CERAMIC, CHIP 15PF 5% 50V
C225	1-162-568-11	s	CERAMIC, CHIP 0.33uF 25V
C228	1-162-568-11	s	CERAMIC, CHIP 0.33uF 25V
C268	1-124-443-00	s	ELECT 100uF 20% 10V
C282	1-124-478-11	s	ELECT 100uF 20% 25V
C289	1-163-011-11	s	CERAMIC 0.0015uF 10% 50V
C292	1-124-478-11	s	ELECT 100uF 20% 25V
C405	1-135-076-21	s	TANTALUM, CHIP 1uF 10% 35V
C411	1-124-478-11	s	ELECT 100uF 20% 25V
C423	1-163-091-00	s	CERAMIC, CHIP 8PF 50V
C425	1-107-085-00	s	MICA 100PF 5% 50V
C527	1-162-568-11	s	CERAMIC, CHIP 0.33uF 25V
C556	1-124-443-00	s	ELECT 100uF 20% 10V
C576	1-124-478-11	s	ELECT 100uF 20% 25V
C582	1-124-478-11	s	ELECT 100uF 20% 25V
C610	1-124-478-11	s	ELECT 100uF 20% 25V
C680	1-131-367-00	s	TANTALUM 22uF 10% 20V
C900	1-124-478-11	s	ELECT 100uF 20% 25V
C901	1-126-233-11	s	ELECT 22uF 20% 50V
C903	1-124-478-11	s	ELECT 100uF 20% 25V
C904	1-126-233-11	s	ELECT 22uF 20% 50V
C906	1-124-478-11	s	ELECT 100uF 20% 25V
C907	1-126-233-11	s	ELECT 22uF 20% 50V
C909	1-124-478-11	s	ELECT 100uF 20% 25V
C910	1-126-233-11	s	ELECT 22uF 20% 50V
C912	1-124-478-11	s	ELECT 100uF 20% 25V
C913	1-126-233-11	s	ELECT 22uF 20% 50V
C915	1-124-478-11	s	ELECT 100uF 20% 25V
C916	1-126-233-11	s	ELECT 22uF 20% 50V
C918	1-124-478-11	s	ELECT 100uF 20% 25V
C919	1-126-233-11	s	ELECT 22uF 20% 50V
C921	1-124-478-11	s	ELECT 100uF 20% 25V
C922	1-126-233-11	s	ELECT 22uF 20% 50V
C924	1-124-478-11	s	ELECT 100uF 20% 25V
C925	1-126-233-11	s	ELECT 22uF 20% 50V
C927	1-124-478-11	s	ELECT 100uF 20% 25V
C928	1-126-233-11	s	ELECT 22uF 20% 50V
C930	1-124-478-11	s	ELECT 100uF 20% 25V
C931	1-126-233-11	s	ELECT 22uF 20% 50V
C933	1-124-478-11	s	ELECT 100uF 20% 25V
C934	1-126-233-11	s	ELECT 22uF 20% 50V
CN108	1-506-746-11	s	CONNECTOR, DIN 48P, MALE
CN109	1-506-748-11	s	CONNECTOR, DIN 96P, MALE
D100	8-719-105-82	s	DIODE RD5.1M-B2
D200	8-719-106-08	s	DIODE RD6.2M-B2

NOTE: Please see pages 19-51 and 19-52 for the parts that are not listed in the part list.

(TBC-7D BOARD)

Ref. No. or Q'ty	Part No.	SP	Description
D202	8-719-915-43	s	DIODE, VARICAP FC54M
D203	8-719-915-43	s	DIODE, VARICAP FC54M
D204	8-719-915-43	s	DIODE, VARICAP FC54M
D205	8-719-938-98	s	DIODE, VARICAP FC51M
D206	8-719-938-98	s	DIODE, VARICAP FC51M
D207	8-719-938-98	s	DIODE, VARICAP FC51M
D208	8-719-800-76	s	DIODE 1SS226
D209	8-719-104-34	s	DIODE 1S2835
D210	8-719-105-82	s	DIODE RD5.1M-B2
D211	8-719-106-53	s	DIODE RD10M-B2
D212	8-719-938-98	s	DIODE, VARICAP FC51M
D213	8-719-938-98	s	DIODE, VARICAP FC51M
D214	8-719-104-34	s	DIODE 1S2835
D400	8-719-105-82	s	DIODE RD5.1M-B2
D503	8-719-915-43	s	DIODE, VARICAP FC54M
D504	8-719-915-43	s	DIODE, VARICAP FC54M
D505	8-719-915-43	s	DIODE, VARICAP FC54M
D506	8-719-800-76	s	DIODE 1SS226
D507	8-719-106-62	s	DIODE RD11M-B2
D508	8-719-105-82	s	DIODE RD5.1M-B2
D650	8-719-106-17	s	DIODE RD6.8M-B2
D680	8-719-800-76	s	DIODE 1SS226
D700	8-719-104-34	s	DIODE 1S2835
D704	8-719-105-82	s	DIODE RD5.1M-B2
D705	8-719-105-73	s	DIODE RD4.7M-B2
D706	8-719-800-76	s	DIODE 1SS226
D707	8-719-106-17	s	DIODE RD6.8M-B2
DL500	1-415-309-00	s	DELAY LINE 350nS
FL100	1-236-387-11	s	FILTER, LOW-PASS
FL400	1-236-162-11	s	FILTER, LOW-PASS
IC101	8-749-901-45	s	IC SBX4002-01
IC102	8-759-908-15	s	IC TL431CLP
IC103	8-759-908-17	s	IC TL082CPS
IC105	8-752-032-55	s	IC CXA1096M
IC108	8-759-948-32	s	IC CXD1310AM
IC201	8-759-201-47	s	IC TA7357AP
IC203	8-759-941-27	s	IC MB4002PF
IC205	8-759-941-27	s	IC MB4002PF
IC206	8-759-907-81	s	IC SN74LS221NS
IC207	8-759-908-17	s	IC TL082CPS
IC208	8-759-941-17	s	IC SN74LS06NS
IC209	8-759-012-00	s	IC MC10H116M
IC210	8-759-012-13	s	IC MC10H125M
IC211	8-759-230-23	s	IC CXD1045AQ
IC212	8-749-901-21	s	IC BX1461
IC213	8-759-908-17	s	IC TL082CPS
IC214	8-759-945-29	s	IC TL601CPS
IC215	8-759-907-81	s	IC SN74LS221NS
IC216	8-749-901-20	s	IC BX1460
IC217	8-759-105-49	s	IC UPC319G2
#IC218	8-759-239-58	s	IC TC74HC221AF
IC219	8-759-925-90	s	IC SN74HC74NS
IC220	8-759-908-17	s	IC TL082CPS
IC221	8-759-945-29	s	IC TL601CPS
IC222	8-759-100-97	s	IC UPC339G2

(TBC-7D BOARD)

Ref. No. or Q'ty	Part No.	SP	Description
IC223	8-759-239-23	s	IC TC74HC86AF
IC224	8-759-925-76	s	IC SN74HC08NS
IC225	8-759-908-17	s	IC TL082CPS
IC226	8-759-945-29	s	IC TL601CPS
IC228	8-759-908-17	s	IC TL082CPS
IC231	8-759-925-76	s	IC SN74HC08NS
IC232	8-759-945-29	s	IC TL601CPS
IC234	8-759-926-28	s	IC SN74HC174NS
IC235	8-759-926-18	s	IC SN74HC157NS
IC236	8-759-926-18	s	IC SN74HC157NS
IC237	8-759-908-17	s	IC TL082CPS
IC238	8-759-907-81	s	IC SN74LS221NS
IC239	8-759-927-46	s	IC SN74HC00NS
IC240	8-759-945-29	s	IC TL601CPS
IC241	8-759-100-93	s	IC UPC393G2
IC401	8-749-901-45	s	IC SBX4002-01
IC403	8-752-032-55	s	IC CXA1096M
IC404	8-759-948-32	s	IC CXD1310AM
IC501	8-759-927-46	s	IC SN74HC00NS
IC502	8-759-201-47	s	IC TA7357AP
IC504	8-759-908-17	s	IC TL082CPS
IC505	8-759-941-17	s	IC SN74LS06NS
IC506	8-759-012-13	s	IC MC10H125M
IC507	8-759-230-23	s	IC CXD1045AQ
IC508	8-749-901-21	s	IC BX1461
IC509	8-759-908-17	s	IC TL082CPS
IC510	8-759-945-29	s	IC TL601CPS
IC511	8-749-901-20	s	IC BX1460
IC512	8-759-907-81	s	IC SN74LS221NS
IC513	8-759-941-27	s	IC MB4002PF
IC514	8-759-945-29	s	IC TL601CPS
IC516	8-759-908-17	s	IC TL082CPS
IC517	8-759-908-17	s	IC TL082CPS
IC519	8-759-239-23	s	IC TC74HC86AF
IC520	8-759-945-29	s	IC TL601CPS
IC522	8-759-105-49	s	IC UPC319G2
IC523	8-759-908-17	s	IC TL082CPS
IC610	8-759-908-15	s	IC TL431CLP
IC611	8-759-908-17	s	IC TL082CPS
IC650	8-759-941-27	s	IC MB4002PF
IC700	8-759-945-29	s	IC TL601CPS
IC701	8-752-015-81	s	IC CX20158
IC702	8-752-332-67	s	IC CXD1217M
IC720	8-759-925-76	s	IC SN74HC08NS
IC801	8-752-015-81	s	IC CX20158
L205	1-408-880-00	s	INDUCTOR 0.68uH
L213	1-408-427-00	s	INDUCTOR 330uH
L214	1-410-492-11	s	INDUCTOR 680uH
L216	1-408-419-00	s	INDUCTOR 68uH
L219	1-410-461-41	s	INDUCTOR 1.8uH
L505	1-408-420-00	s	INDUCTOR 82uH
L506	1-408-422-00	s	INDUCTOR 120uH
L507	1-408-427-00	s	INDUCTOR 330uH
L508	1-408-880-00	s	INDUCTOR 0.68uH
L517	1-408-426-00	s	INDUCTOR 270uH
L520	1-408-426-00	s	INDUCTOR 270uH

NOTE: Please see pages 19-51 and 19-52 for the parts that are not listed in the part list.

(TBC-7D BOARD)

Ref. No. or Q'ty	Part No.	SP	Description
L650	1-408-419-00	s	INDUCTOR 68uH
L651	1-408-423-00	s	INDUCTOR 150UH
L900	1-421-329-00	s	COIL, CHOKE
L901	1-421-329-00	s	COIL, CHOKE
L902	1-421-329-00	s	COIL, CHOKE
L903	1-421-329-00	s	COIL, CHOKE
L904	1-421-329-00	s	COIL, CHOKE
L905	1-421-329-00	s	COIL, CHOKE
L906	1-421-329-00	s	COIL, CHOKE
L907	1-421-329-00	s	COIL, CHOKE
L908	1-421-329-00	s	COIL, CHOKE
L909	1-421-329-00	s	COIL, CHOKE
L910	1-421-329-00	s	COIL, CHOKE
L911	1-421-329-00	s	COIL, CHOKE
LV200	1-407-563-00	s	COIL, VAR 1uH
LV201	1-407-564-00	s	COIL, VAR 1.5uH
LV500	1-407-563-00	s	COIL, VAR 1uH
Q100	8-729-100-66	s	TRANSISTOR 2SC1623
Q101	8-729-106-68	s	TRANSISTOR 2SC1615A-GP
Q102	8-729-106-60	s	TRANSISTOR 2SB1115A
Q103	8-729-102-07	s	TRANSISTOR 2SC2223-F13
Q104	8-729-102-07	s	TRANSISTOR 2SC2223-F13
Q105	8-729-109-44	s	TRANSISTOR 2SK94
Q106	8-729-102-07	s	TRANSISTOR 2SC2223-F13
Q201	8-729-100-66	s	TRANSISTOR 2SC1623
Q203	8-729-100-66	s	TRANSISTOR 2SC1623
Q204	8-729-100-66	s	TRANSISTOR 2SC1623
Q205	8-729-100-66	s	TRANSISTOR 2SC1623
Q206	8-729-100-66	s	TRANSISTOR 2SC1623
Q207	8-729-100-66	s	TRANSISTOR 2SC1623
Q208	8-729-109-44	s	TRANSISTOR 2SK94
Q211	8-729-102-07	s	TRANSISTOR 2SC2223-F13
Q212	8-729-102-07	s	TRANSISTOR 2SC2223-F13
Q213	8-729-109-44	s	TRANSISTOR 2SK94
Q214	8-729-102-07	s	TRANSISTOR 2SC2223-F13
Q215	8-729-216-22	s	TRANSISTOR 2SA1162
Q220	8-729-109-44	s	TRANSISTOR 2SK94
Q221	8-729-109-44	s	TRANSISTOR 2SK94
Q222	8-729-202-38	s	TRANSISTOR 2SC3326N
Q223	8-729-800-44	s	TRANSISTOR 2SK152-4
Q224	8-729-900-53	s	TRANSISTOR DTC114EK
Q225	8-729-900-53	s	TRANSISTOR DTC114EK
Q226	8-729-900-53	s	TRANSISTOR DTC114EK
Q227	8-729-900-53	s	TRANSISTOR DTC114EK
Q228	8-729-900-53	s	TRANSISTOR DTC114EK
Q229	8-729-202-38	s	TRANSISTOR 2SC3326N
Q230	8-729-202-38	s	TRANSISTOR 2SC3326N
Q400	8-729-100-66	s	TRANSISTOR 2SC1623
Q401	8-729-102-07	s	TRANSISTOR 2SC2223-F13
Q402	8-729-102-07	s	TRANSISTOR 2SC2223-F13
Q403	8-729-109-44	s	TRANSISTOR 2SK94
Q404	8-729-102-07	s	TRANSISTOR 2SC2223-F13
Q500	8-729-100-66	s	TRANSISTOR 2SC1623
Q501	8-729-100-66	s	TRANSISTOR 2SC1623
Q503	8-729-100-66	s	TRANSISTOR 2SC1623
Q504	8-729-100-66	s	TRANSISTOR 2SC1623

(TBC-7D BOARD)

Ref. No. or Q'ty	Part No.	SP	Description
Q505	8-729-100-66	s	TRANSISTOR 2SC1623
Q512	8-729-102-07	s	TRANSISTOR 2SC2223-F13
Q513	8-729-109-44	s	TRANSISTOR 2SK94
Q514	8-729-102-07	s	TRANSISTOR 2SC2223-F13
Q515	8-729-102-07	s	TRANSISTOR 2SC2223-F13
Q516	8-729-216-22	s	TRANSISTOR 2SA1162
Q610	8-729-106-68	s	TRANSISTOR 2SC1615A-GP
Q611	8-729-106-60	s	TRANSISTOR 2SB1115A
Q680	8-729-109-44	s	TRANSISTOR 2SK94
Q681	8-729-100-66	s	TRANSISTOR 2SC1623
Q800	8-729-109-44	s	TRANSISTOR 2SK94
Q801	8-729-109-44	s	TRANSISTOR 2SK94
Q802	8-729-100-66	s	TRANSISTOR 2SC1623
Q803	8-729-109-44	s	TRANSISTOR 2SK94
R101	1-216-651-11	s	METAL, CHIP 1K 0.5% 1/10W
R105	1-216-639-11	s	METAL, CHIP 330 0.5% 1/10W
R106	1-216-639-11	s	METAL, CHIP 330 0.5% 1/10W
R107	1-216-641-11	s	METAL, CHIP 390 0.5% 1/10W
R111	1-216-659-11	s	METAL, CHIP 2.2K 0.5% 1/10W
R114	1-216-675-11	s	METAL, CHIP 10K 0.5% 1/10W
R115	1-216-675-11	s	METAL, CHIP 10K 0.5% 1/10W
R135	1-216-643-11	s	METAL, CHIP 470 0.5% 1/10W
R139	1-216-655-11	s	METAL, CHIP 1.5K 0.5% 1/10W
R140	1-216-653-11	s	METAL, CHIP 1.2K 0.5% 1/10W
R149	1-216-659-11	s	METAL, CHIP 2.2K 0.5% 1/10W
R205	1-216-665-11	s	METAL, CHIP 3.9K 0.5% 1/10W
R213	1-216-653-11	s	METAL, CHIP 1.2K 0.5% 1/10W
R218	1-216-669-11	s	METAL, CHIP 5.6K 0.5% 1/10W
R219	1-216-691-11	s	METAL, CHIP 47K 0.5% 1/10W
R220	1-216-674-11	s	METAL, CHIP 9.1K 0.5% 1/10W
R222	1-216-660-11	s	METAL, CHIP 2.4K 0.5% 1/10W
R249	1-216-682-11	s	METAL, CHIP 20K 0.5% 1/10W
R250	1-216-669-11	s	METAL, CHIP 5.6K 0.5% 1/10W
R251	1-216-682-11	s	METAL, CHIP 20K 0.5% 1/10W
R252	1-216-671-11	s	METAL, CHIP 6.8K 0.5% 1/10W
R254	1-216-695-11	s	METAL, CHIP 68K 0.5% 1/10W
R258	1-216-671-11	s	METAL, CHIP 6.8K 0.5% 1/10W
R259	1-216-659-11	s	METAL, CHIP 2.2K 0.5% 1/10W
R264	1-216-683-11	s	METAL, CHIP 22K 0.5% 1/10W
R267	1-216-665-11	s	METAL, CHIP 3.9K 0.5% 1/10W
R270	1-216-675-11	s	METAL, CHIP 10K 0.5% 1/10W
R271	1-216-680-11	s	METAL, CHIP 16K 0.5% 1/10W
R272	1-216-681-11	s	METAL, CHIP 18K 0.5% 1/10W
R276	1-216-671-11	s	METAL, CHIP 6.8K 0.5% 1/10W
R288	1-216-667-11	s	METAL, CHIP 4.7K 0.5% 1/10W
R293	1-216-667-11	s	METAL, CHIP 4.7K 0.5% 1/10W
R294	1-216-675-11	s	METAL, CHIP 10K 0.5% 1/10W
R296	1-216-669-11	s	METAL, CHIP 5.6K 0.5% 1/10W
R302	1-216-655-11	s	METAL, CHIP 1.5K 0.5% 1/10W
R303	1-216-645-11	s	METAL, CHIP 560 0.5% 1/10W
R312	1-216-649-11	s	METAL, CHIP 820 0.5% 1/10W
R313	1-216-661-11	s	METAL, CHIP 2.7K 0.5% 1/10W
R314	1-216-686-11	s	METAL, CHIP 30K 0.5% 1/10W
R316	1-216-683-11	s	METAL, CHIP 22K 0.5% 1/10W
R317	1-216-683-11	s	METAL, CHIP 22K 0.5% 1/10W
R330	1-216-675-11	s	METAL, CHIP 10K 0.5% 1/10W

NOTE: Please see pages 19-51 and 19-52 for the parts that are not listed in the part list.

(TBC-7D BOARD)

Ref. No. or Q'ty	Part No.	SP	Description
#R337	1-216-059-00	s	METAL, CHIP 2.7K 5% 1/10W
R338	1-216-659-11	s	METAL, CHIP 2.2K 0.5% 1/10W
R340	1-216-675-11	s	METAL, CHIP 10K 0.5% 1/10W
R341	1-216-659-11	s	METAL, CHIP 2.2K 0.5% 1/10W
R348	1-216-681-11	s	METAL, CHIP 18K 0.5% 1/10W
R353	1-216-662-11	s	METAL, CHIP 3K 0.5% 1/10W
R354	1-216-665-11	s	METAL, CHIP 3.9K 0.5% 1/10W
R355	1-216-693-11	s	METAL, CHIP 56K 0.5% 1/10W
R356	1-216-672-11	s	METAL, CHIP 7.5K 0.5% 1/10W
R357	1-216-677-11	s	METAL, CHIP 12K 0.5% 1/10W
R358	1-216-673-11	s	METAL, CHIP 8.2K 0.5% 1/10W
R359	1-216-679-11	s	METAL, CHIP 15K 0.5% 1/10W
R360	1-216-679-11	s	METAL, CHIP 15K 0.5% 1/10W
R361	1-216-672-11	s	METAL, CHIP 7.5K 0.5% 1/10W
R367	1-216-683-11	s	METAL, CHIP 22K 0.5% 1/10W
R368	1-216-651-11	s	METAL, CHIP 1K 0.5% 1/10W
R371	1-216-652-11	s	METAL, CHIP 1.1K 0.5% 1/10W
R372	1-216-671-11	s	METAL, CHIP 6.8K 0.5% 1/10W
R375	1-216-651-11	s	METAL, CHIP 1K 0.5% 1/10W
R376	1-216-679-11	s	METAL, CHIP 15K 0.5% 1/10W
R379	1-216-685-11	s	METAL, CHIP 27K 0.5% 1/10W
R380	1-216-666-11	s	METAL, CHIP 4.3K 0.5% 1/10W
R401	1-216-651-11	s	METAL, CHIP 1K 0.5% 1/10W
R405	1-216-639-11	s	METAL, CHIP 330 0.5% 1/10W
R406	1-216-639-11	s	METAL, CHIP 330 0.5% 1/10W
R407	1-216-643-11	s	METAL, CHIP 470 0.5% 1/10W
R411	1-216-663-11	s	METAL, CHIP 3.3K 0.5% 1/10W
R412	1-216-669-11	s	METAL, CHIP 5.6K 0.5% 1/10W
R426	1-216-677-11	s	METAL, CHIP 12K 0.5% 1/10W
R431	1-216-655-11	s	METAL, CHIP 1.5K 0.5% 1/10W
R432	1-216-653-11	s	METAL, CHIP 1.2K 0.5% 1/10W
R438	1-216-659-11	s	METAL, CHIP 2.2K 0.5% 1/10W
R507	1-216-634-11	s	METAL, CHIP 200 0.5% 1/10W
R509	1-216-635-11	s	METAL, CHIP 220 0.5% 1/10W
R510	1-216-635-11	s	METAL, CHIP 220 0.5% 1/10W
R511	1-216-655-11	s	METAL, CHIP 1.5K 0.5% 1/10W
R512	1-216-651-11	s	METAL, CHIP 1K 0.5% 1/10W
R513	1-216-619-11	s	METAL, CHIP 47 0.5% 1/10W
R517	1-216-651-11	s	METAL, CHIP 1K 0.5% 1/10W
R518	1-216-651-11	s	METAL, CHIP 1K 0.5% 1/10W
R522	1-216-691-11	s	METAL, CHIP 47K 0.5% 1/10W
R523	1-216-699-11	s	METAL, CHIP 100K 0.5% 1/10W
R527	1-216-674-11	s	METAL, CHIP 9.1K 0.5% 1/10W
R528	1-216-660-11	s	METAL, CHIP 2.4K 0.5% 1/10W
R535	1-216-682-11	s	METAL, CHIP 20K 0.5% 1/10W
R536	1-216-667-11	s	METAL, CHIP 4.7K 0.5% 1/10W
R541	1-216-683-11	s	METAL, CHIP 22K 0.5% 1/10W
R543	1-216-671-11	s	METAL, CHIP 6.8K 0.5% 1/10W
R544	1-216-671-11	s	METAL, CHIP 6.8K 0.5% 1/10W
R545	1-216-659-11	s	METAL, CHIP 2.2K 0.5% 1/10W
R547	1-216-675-11	s	METAL, CHIP 10K 0.5% 1/10W
R548	1-216-665-11	s	METAL, CHIP 3.9K 0.5% 1/10W
R549	1-216-698-11	s	METAL, CHIP 91K 0.5% 1/10W
R550	1-216-680-11	s	METAL, CHIP 16K 0.5% 1/10W
R551	1-216-681-11	s	METAL, CHIP 18K 0.5% 1/10W
R552	1-216-675-11	s	METAL, CHIP 10K 0.5% 1/10W

(TBC-7D BOARD)

Ref. No. or Q'ty	Part No.	SP	Description
R553	1-216-675-11	s	METAL, CHIP 10K 0.5% 1/10W
R565	1-216-651-11	s	METAL, CHIP 1K 0.5% 1/10W
R566	1-216-661-11	s	METAL, CHIP 2.7K 0.5% 1/10W
R567	1-216-686-11	s	METAL, CHIP 30K 0.5% 1/10W
R570	1-216-667-11	s	METAL, CHIP 4.7K 0.5% 1/10W
R571	1-216-687-11	s	METAL, CHIP 33K 0.5% 1/10W
R581	1-216-634-11	s	METAL, CHIP 200 0.5% 1/10W
R585	1-216-645-11	s	METAL, CHIP 560 0.5% 1/10W
R586	1-216-655-11	s	METAL, CHIP 1.5K 0.5% 1/10W
R594	1-216-683-11	s	METAL, CHIP 22K 0.5% 1/10W
R595	1-216-683-11	s	METAL, CHIP 22K 0.5% 1/10W
R597	1-216-675-11	s	METAL, CHIP 10K 0.5% 1/10W
R599	1-216-681-11	s	METAL, CHIP 18K 0.5% 1/10W
R601	1-216-663-11	s	METAL, CHIP 3.3K 0.5% 1/10W
R605	1-216-691-11	s	METAL, CHIP 47K 0.5% 1/10W
R611	1-216-675-11	s	METAL, CHIP 10K 0.5% 1/10W
R612	1-216-675-11	s	METAL, CHIP 10K 0.5% 1/10W
R704	1-216-677-11	s	METAL, CHIP 12K 0.5% 1/10W
R708	1-216-663-11	s	METAL, CHIP 3.3K 0.5% 1/10W
R709	1-216-652-11	s	METAL, CHIP 1.1K 0.5% 1/10W
R710	1-216-673-11	s	METAL, CHIP 8.2K 0.5% 1/10W
R717	1-216-683-11	s	METAL, CHIP 22K 0.5% 1/10W
R718	1-216-683-11	s	METAL, CHIP 22K 0.5% 1/10W
R719	1-216-683-11	s	METAL, CHIP 22K 0.5% 1/10W
R720	1-216-683-11	s	METAL, CHIP 22K 0.5% 1/10W
R807	1-216-663-11	s	METAL, CHIP 3.3K 0.5% 1/10W
R816	1-216-675-11	s	METAL, CHIP 10K 0.5% 1/10W
R817	1-216-668-11	s	METAL, CHIP 5.1K 0.5% 1/10W
#R852	NOT IN USE		
#R853	1-216-295-00	s	METAL, CHIP 0-OHM
RV100	1-237-515-21	s	RES, ADJ, METAL 1K
RV101	1-237-514-21	s	RES, ADJ, METAL 500
RV102	1-237-515-21	s	RES, ADJ, METAL 1K
RV103	1-237-515-21	s	RES, ADJ, METAL 1K
RV200	1-237-517-21	s	RES, ADJ, METAL 5K
RV201	1-237-516-21	s	RES, ADJ, METAL 2K
RV202	1-230-847-11	s	RES, ADJ, METAL 500K
RV203	1-237-518-21	s	RES, ADJ, METAL 10K
RV400	1-237-514-21	s	RES, ADJ, METAL 500
RV401	1-237-516-21	s	RES, ADJ, METAL 2K
RV402	1-237-515-21	s	RES, ADJ, METAL 1K
RV500	1-237-516-21	s	RES, ADJ, METAL 2K
RV501	1-237-516-21	s	RES, ADJ, METAL 2K
RV502	1-237-517-21	s	RES, ADJ, METAL 5K
RV503	1-237-518-21	s	RES, ADJ, METAL 10K
RV610	1-237-515-21	s	RES, ADJ, METAL 1K
S101	1-553-977-00	s	SWITCH, SLIDE
S200	1-553-977-00	s	SWITCH, SLIDE
TH201	1-800-198-XX	s	THERMISTOR S-1K
TH202	1-800-202-XX	s	THERMISTOR S-10K
TH501	1-800-198-XX	s	THERMISTOR S-1K
TH502	1-800-202-XX	s	THERMISTOR S-10K

NOTE: Please see pages 19-51 and 19-52 for the parts that are not listed in the part list.

TBC-9PC BOARD

Ref. No. or Q'ty	Part No.	SP	Description
1pc	A-6727-227-A	o	MOUNTED CIRCUIT BOARD, TBC-9PC
Thia board includes TG-52 board. See "TG-52 BOARD" for detailes of it.			
2pcs	7-622-207-05	s	N 2.6, TYPE 2
2pcs	7-628-254-30	s	SCREW +PS 2.6X10
C9	1-135-145-11	s	TANTALUM, CHIP 0.47uF 10% 35V
C20	1-135-145-11	s	TANTALUM, CHIP 0.47uF 10% 35V
C49	1-163-241-11	s	CERAMIC, CHIP 39PF 5% 50V
C63	1-163-097-00	s	CERAMIC, CHIP 15PF 5% 50V
C91	1-135-145-11	s	TANTALUM, CHIP 0.47uF 10% 35V
C110	1-124-478-11	s	ELECT 100uF 20% 25V
C112	1-124-478-11	s	ELECT 100uF 20% 25V
C116	1-124-478-11	s	ELECT 100uF 20% 25V
C118	1-124-478-11	s	ELECT 100uF 20% 25V
C128	1-124-478-11	s	ELECT 100uF 20% 25V
C208	1-135-091-00	s	TANTALUN, CHIP 1uF 10% 16V
C209	1-130-491-00	s	MYLAR 0.047uF 5% 50V
C216	1-135-155-21	s	TANTAL CHIP 4.7uF 10% 16V
CN101	1-506-748-11	s	CONNECTOR, DIN 96P, MALE
CP1	1-579-103-11	s	VCO, 17.734475MHz
CP2	1-577-294-11	s	VCO, CRYSTAL 14.187500MHz
CP3	1-577-294-11	s	VCO, CRYSTAL 14.187500MHz
D1	8-719-104-34	s	DIODE 1S2835
D200	8-719-800-76	s	DIODE 1SS226
D201	8-719-105-58	s	DIODE RD3.9M-B2
D202	8-719-800-76	s	DIODE 1SS226
D203	8-719-104-34	s	DIODE 1S2835
D204	8-719-106-08	s	DIODE RD6.2M-B2
D205	8-719-800-76	s	DIODE 1SS226
IC1	8-759-927-46	s	IC SN74HC00NS
IC2	8-752-006-12	s	IC CX20061
IC4	8-752-335-47	s	IC CXD1216M
IC5	8-759-009-07	s	IC MC14053BF
IC6	8-752-332-67	s	IC CXD1217M
IC7	8-759-803-77	s	IC LC74HC32
IC8	8-759-925-90	s	IC SN74HC74NS
IC9	8-759-803-77	s	IC LC74HC32
IC10	8-752-332-67	s	IC CXD1217M
IC11	8-759-239-23	s	IC TC74HC86AF
IC12	8-759-908-17	s	IC TL082CPS
IC13	8-759-902-88	s	IC SN74LS123NS
IC14	8-759-981-51	s	IC RC1496M
IC16	8-759-925-85	s	IC SN74HC32NS
IC17	8-759-100-93	s	IC UPC393G2
IC18	8-759-908-17	s	IC TL082CPS
IC19	8-759-206-28	s	IC TC74HC123F
IC20	8-759-908-15	s	IC TL431CLP
IC21	8-752-335-47	s	IC CXD1216M
IC22	8-759-207-66	s	IC CXD1024Q
IC23	8-752-332-67	s	IC CXD1217M
IC24	8-759-918-35	s	IC CX20162
IC25	8-759-904-84	s	IC 74F74PC
IC26	8-759-929-83	s	IC SN74LS11NS
IC27	8-759-925-90	s	IC SN74HC74NS

(TBC-9PC BOARD)

Ref. No. or Q'ty	Part No.	SP	Description
IC28	8-759-925-74	s	IC SN74HC04NS
IC29	8-759-926-48	s	IC SN74HC244NS
IC30	8-759-930-57	s	IC SN74LS164NS
IC31	8-759-012-02	s	IC MC10H124M
IC32	8-759-926-48	s	IC SN74HC244NS
IC33	8-759-206-28	s	IC TC74HC123F
IC34	8-759-929-83	s	IC SN74LS11NS
IC35	8-759-239-23	s	IC TC74HC86AF
IC36	8-759-930-57	s	IC SN74LS164NS
IC37	8-759-908-15	s	IC TL431CLP
IC40	8-759-925-90	s	IC SN74HC74NS
IC41	8-759-907-81	s	IC SN74LS221NS
IC42	8-759-907-81	s	IC SN74LS221NS
IC200	8-759-941-27	s	IC MB4002PF
IC201	8-759-908-17	s	IC TL082CPS
IC202	8-759-945-29	s	IC TL601CPS
IC203	8-759-105-49	s	IC UPC319G2
IC204	8-759-803-77	s	IC LC74HC32
IC300	8-759-925-74	s	IC SN74HC04NS
IC301	8-759-925-85	s	IC SN74HC32NS
IC302	8-759-930-57	s	IC SN74LS164NS
IC303	8-759-930-57	s	IC SN74LS164NS
L18	1-408-420-00	s	INDUCTOR 82uH
L28	1-421-329-00	s	COIL, CHOKE
L29	1-421-329-00	s	COIL, CHOKE
L31	1-421-329-00	s	COIL, CHOKE
L32	1-421-329-00	s	COIL, CHOKE
L33	1-408-420-00	s	INDUCTOR 82uH
L34	1-421-329-00	s	COIL, CHOKE
L200	1-408-419-00	s	INDUCTOR 68uH
Q1	8-729-100-66	s	TRANSISTOR 2SC1623
Q2	8-729-100-66	s	TRANSISTOR 2SC1623
Q3	8-729-100-66	s	TRANSISTOR 2SC1623
Q6	8-729-216-22	s	TRANSISTOR 2SA1162
Q7	8-729-100-66	s	TRANSISTOR 2SC1623
Q8	8-729-216-22	s	TRANSISTOR 2SA1162
Q9	8-729-100-66	s	TRANSISTOR 2SC1623
Q10	8-729-100-66	s	TRANSISTOR 2SC1623
Q11	8-729-100-66	s	TRANSISTOR 2SC1623
Q12	8-729-100-66	s	TRANSISTOR 2SC1623
Q13	8-729-100-66	s	TRANSISTOR 2SC1623
Q14	8-729-122-63	s	TRANSISTOR 2SA1226
Q15	8-729-100-66	s	TRANSISTOR 2SC1623
Q16	8-729-100-66	s	TRANSISTOR 2SC1623
Q17	8-729-122-63	s	TRANSISTOR 2SA1226
Q18	8-729-100-66	s	TRANSISTOR 2SC1623
Q19	8-729-100-66	s	TRANSISTOR 2SC1623
Q20	8-729-106-68	s	TRANSISTOR 2SC1615A-GP
Q200	8-729-100-66	s	TRANSISTOR 2SC1623
Q201	8-729-109-44	s	TRANSISTOR 2SK94
Q202	8-729-109-44	s	TRANSISTOR 2SK94
Q203	8-729-100-66	s	TRANSISTOR 2SC1623
Q204	8-729-109-44	s	TRANSISTOR 2SK94
Q205	8-729-100-66	s	TRANSISTOR 2SC1623
R23	1-216-673-11	s	METAL, CHIP 8.2K 0.5% 1/10W

NOTE: Please see pages 19-51 and 19-52 for the parts that are not listed in the part list.

(TBC-9PC BOARD)

Ref. No. or Q'ty	Part No.	SP	Description
R24	1-216-673-11	s	METAL, CHIP 8.2K 0.5% 1/10W
R28	1-216-673-11	s	METAL, CHIP 8.2K 0.5% 1/10W
R29	1-216-675-11	s	METAL, CHIP 10K 0.5% 1/10W
R34	1-216-671-11	s	METAL, CHIP 6.8K 0.5% 1/10W
R35	1-216-673-11	s	METAL, CHIP 8.2K 0.5% 1/10W
R39	1-216-691-11	s	METAL, CHIP 47K 0.5% 1/10W
R40	1-216-667-11	s	METAL, CHIP 4.7K 0.5% 1/10W
R42	1-216-656-11	s	METAL, CHIP 1.6K 0.5% 1/10W
R43	1-216-651-11	s	METAL, CHIP 1K 0.5% 1/10W
R47	1-216-659-11	s	METAL, CHIP 2.2K 0.5% 1/10W
R48	1-216-683-11	s	METAL, CHIP 22K 0.5% 1/10W
R49	1-216-681-11	s	METAL, CHIP 18K 0.5% 1/10W
R50	1-216-651-11	s	METAL, CHIP 1K 0.5% 1/10W
R53	1-216-659-11	s	METAL, CHIP 2.2K 0.5% 1/10W
R55	1-216-667-11	s	METAL, CHIP 4.7K 0.5% 1/10W
R56	1-216-667-11	s	METAL, CHIP 4.7K 0.5% 1/10W
R58	1-216-651-11	s	METAL, CHIP 1K 0.5% 1/10W
R60	1-216-675-11	s	METAL, CHIP 10K 0.5% 1/10W
R61	1-216-636-11	s	METAL, CHIP 240 0.5% 1/10W
R62	1-216-667-11	s	METAL, CHIP 4.7K 0.5% 1/10W
R63	1-216-667-11	s	METAL, CHIP 4.7K 0.5% 1/10W
R65	1-216-651-11	s	METAL, CHIP 1K 0.5% 1/10W
R68	1-216-674-11	s	METAL, CHIP 9.1K 0.5% 1/10W
R69	1-216-650-11	s	METAL, CHIP 910 0.5% 1/10W
R70	1-216-649-11	s	METAL, CHIP 820 0.5% 1/10W
R74	1-216-667-11	s	METAL, CHIP 4.7K 0.5% 1/10W
R75	1-216-641-11	s	METAL, CHIP 390 0.5% 1/10W
R78	1-216-651-11	s	METAL, CHIP 1K 0.5% 1/10W
R79	1-216-651-11	s	METAL, CHIP 1K 0.5% 1/10W
R80	1-216-651-11	s	METAL, CHIP 1K 0.5% 1/10W
R81	1-216-651-11	s	METAL, CHIP 1K 0.5% 1/10W
R82	1-216-651-11	s	METAL, CHIP 1K 0.5% 1/10W
R83	1-216-635-11	s	METAL, CHIP 220 0.5% 1/10W
R86	1-216-651-11	s	METAL, CHIP 1K 0.5% 1/10W
R87	1-216-651-11	s	METAL, CHIP 1K 0.5% 1/10W
R88	1-216-643-11	s	METAL, CHIP 470 0.5% 1/10W
R92	1-216-624-11	s	METAL, CHIP 75 0.5% 1/10W
R93	1-216-699-11	s	METAL, CHIP 100K 0.5% 1/10W
R94	1-216-679-11	s	METAL, CHIP 15K 0.5% 1/10W
R95	1-216-624-11	s	METAL, CHIP 75 0.5% 1/10W
R97	1-216-674-11	s	METAL, CHIP 9.1K 0.5% 1/10W
R98	1-216-651-11	s	METAL, CHIP 1K 0.5% 1/10W
R103	1-216-675-11	s	METAL, CHIP 10K 0.5% 1/10W
R104	1-216-660-11	s	METAL, CHIP 2.4K 0.5% 1/10W
R105	1-216-665-11	s	METAL, CHIP 3.9K 0.5% 1/10W
R108	1-216-690-11	s	METAL, CHIP 43K 0.5% 1/10W
R109	1-216-675-11	s	METAL, CHIP 10K 0.5% 1/10W
R110	1-216-675-11	s	METAL, CHIP 10K 0.5% 1/10W
R111	1-249-413-11	s	CARBON 470 5% 1/4W
R120	1-216-678-11	s	METAL, CHIP 13K 0.5% 1/10W
R138	1-216-673-11	s	METAL, CHIP 8.2K 0.5% 1/10W
R139	1-216-665-11	s	METAL, CHIP 3.9K 0.5% 1/10W
R171	1-216-643-11	s	METAL, CHIP 470 0.5% 1/10W
R181	1-216-675-11	s	METAL, CHIP 10K 0.5% 1/10W
R182	1-216-675-11	s	METAL, CHIP 10K 0.5% 1/10W
R183	1-216-663-11	s	METAL, CHIP 3.3K 0.5% 1/10W

(TBC-9PC BOARD)

Ref. No. or Q'ty	Part No.	SP	Description
R184	1-216-685-11	s	METAL, CHIP 27K 0.5% 1/10W
R185	1-216-659-11	s	METAL, CHIP 2.2K 0.5% 1/10W
R186	1-216-685-11	s	METAL, CHIP 27K 0.5% 1/10W
R189	1-216-661-11	s	METAL, CHIP 2.7K 0.5% 1/10W
R216	1-216-649-11	s	METAL, CHIP 820 0.5% 1/10W
R221	1-216-651-11	s	METAL, CHIP 1K 0.5% 1/10W
R222	1-216-651-11	s	METAL, CHIP 1K 0.5% 1/10W
R229	1-216-669-11	s	METAL, CHIP 5.6K 0.5% 1/10W
R230	1-216-683-11	s	METAL, CHIP 22K 0.5% 1/10W
R332	1-216-657-11	s	METAL, CHIP 1.8K 0.5% 1/10W
R333	1-216-663-11	s	METAL, CHIP 3.3K 0.5% 1/10W
RV1	1-237-517-21	s	RES, ADJ, METAL 5K
RV2	1-237-517-21	s	RES, ADJ, METAL 5K
RV3	1-237-517-21	s	RES, ADJ, METAL 5K
RV4	1-237-519-21	s	RES, ADJ, METAL 20K
RV5	1-237-516-21	s	RES, ADJ, METAL 2K
RV6	1-237-515-21	s	RES, ADJ, METAL 1K
RV7	1-237-514-21	s	RES, ADJ, METAL 500
RV8	1-237-518-21	s	RES, ADJ, METAL 10K
RV9	1-237-514-21	s	RES, ADJ, METAL 500
RV10	1-237-518-21	s	RES, ADJ, METAL 10K
RV11	1-237-517-21	s	RES, ADJ, METAL 5K
RV12	1-237-518-21	s	RES, ADJ, METAL 10K
RV13	1-237-518-21	s	RES, ADJ, METAL 10K
RV14	1-237-518-21	s	RES, ADJ, METAL 10K
RV15	1-237-517-21	s	RES, ADJ, METAL 5K
S3	1-554-150-21	s	SWITCH, DIP 8-CKT
S4	1-554-150-21	s	SWITCH, DIP 8-CKT
TH1	1-800-202-XX	s	THERMISTOR S-10K

NOTE: Please see pages 19-51 and 19-52 for the parts that are not listed in the part list.

TBC-12PC BOARD

Ref. No. or Q'ty	Part No.	SP	Description
1pc	A-6727-228-A	o	MOUNTED CIRCUIT BOARD, TBC-12PC
This board includes TG-52A and NR-32PC boards. See "TG-52A BOARD" and "NR-32PC BOARD" for details of them.			
4pcs	4-912-181-01	s	SUPPORT, PC
C203	1-123-875-11	s	ELECT 10uF 20% 50V
C220	1-107-045-00	s	MICA 3.9PF 500V
C406	1-130-483-00	s	MYLAR 0.01uF 5% 50V
C424	1-130-483-00	s	MYLAR 0.01uF 5% 50V
C441	1-164-182-11	s	CERAMIC CHIP 3300PF 10% 100V
C505	1-123-875-11	s	ELECT 10uF 20% 50V
C506	1-123-875-11	s	ELECT 10uF 20% 50V
C515	1-123-875-11	s	ELECT 10uF 20% 50V
C529	1-123-875-11	s	ELECT 10uF 20% 50V
C900	1-124-478-11	s	ELECT 100uF 20% 25V
C912	1-124-478-11	s	ELECT 100uF 20% 25V
C916	1-124-478-11	s	ELECT 100uF 20% 25V
C919	1-124-478-11	s	ELECT 100uF 20% 25V
CN106	1-569-465-11	o	CONNECTOR, DIN 48P
CN107	1-568-144-11	o	CONNECTOR, DIN 96P
CN700	1-566-421-11	o	CONNECTOR, 50P MALE
CN800	1-564-359-00	o	CONNECTOR, 20P MALE
CNI808	1-540-083-11	s	SOCKET, IC 89P
CNI809	1-526-655-00	o	SOCKET, IC 18P
CV102	1-141-404-11	s	CAP, TRIMMER 30PF
CV103	1-141-404-11	s	CAP, TRIMMER 30PF
D202	8-719-104-34	s	DIODE 1S2835
D400	8-719-104-34	s	DIODE 1S2835
D500	8-719-106-17	s	DIODE RD6.8M-B2
D501	8-719-106-17	s	DIODE RD6.8M-B2
D801	8-719-104-34	s	DIODE 1S2835
D802	8-719-104-34	s	DIODE 1S2835
D803	8-719-104-34	s	DIODE 1S2835
D900	8-719-104-34	s	DIODE 1S2835
DL250	1-415-546-11	s	DELAY LINE 50nS
IC100	8-759-012-13	s	IC MC10H125M
IC101	8-759-987-09	s	IC CXD8011AQ
IC102	8-759-208-76	s	IC CXD1023AQ
IC103	8-741-159-60	s	IC SBX1596-01
IC104	8-759-201-41	s	IC TD62901P
IC106	8-759-981-99	s	IC RC4560M
IC107	8-759-945-29	s	IC TL601CPS
IC108	8-759-915-41	s	IC 74F02PC
IC109	8-759-925-74	s	IC SN74HC04NS
IC110	8-759-925-74	s	IC SN74HC04NS
IC112	8-759-983-11	s	IC CXD8024Q
IC113	8-759-948-37	s	IC CXD1326AQ
IC114	8-759-930-50	s	IC SN74LS157NS
IC200	8-759-147-05	s	IC UPD42101G-3
IC201	8-759-208-88	s	IC CXD1131Q
IC202	8-759-981-99	s	IC RC4560M
#IC203	8-759-508-58	s	IC MB40778H
IC204	8-759-981-99	s	IC RC4560M

(TBC-12PC BOARD)

Ref. No. or Q'ty	Part No.	SP	Description
IC400	8-759-987-09	s	IC CXD8011AQ
IC401	8-759-208-76	s	IC CXD1023AQ
IC402	8-741-159-60	s	IC SBX1596-01
IC403	8-759-239-23	s	IC TC74HC86AF
IC404	8-759-803-77	s	IC LC74HC32
IC405	8-749-901-21	s	IC BX1461
IC406	8-759-009-07	s	IC MC14053BF
IC407	8-759-908-17	s	IC TL082CPS
IC408	8-759-907-81	s	IC SN74LS221NS
IC409	8-759-925-74	s	IC SN74HC04NS
IC500	8-759-147-05	s	IC UPD42101G-3
IC501	8-759-147-05	s	IC UPD42101G-3
IC502	8-759-208-88	s	IC CXD1131Q
IC504	8-759-927-46	s	IC SN74HC00NS
IC505	8-759-001-98	s	IC MC10198L
#IC506	8-759-508-58	s	IC MB40778H
#IC507	8-759-508-58	s	IC MB40778H
IC508	8-759-907-81	s	IC SN74LS221NS
IC509	8-759-981-99	s	IC RC4560M
IC510	8-759-925-76	s	IC SN74HC08NS
IC512	8-759-925-85	s	IC SN74HC32NS
IC601	8-759-925-90	s	IC SN74HC74NS
IC603	8-759-930-50	s	IC SN74LS157NS
IC801	8-759-925-84	s	IC SN74HC30NS
IC802	8-759-925-84	s	IC SN74HC30NS
IC803	8-759-925-84	s	IC SN74HC30NS
IC804	8-759-203-50	s	IC TC74HC574P
IC805	8-759-203-50	s	IC TC74HC574P
IC806	8-759-147-05	s	IC UPD42101G-3
IC807	8-759-926-76	s	IC SN74HC540NS
IC810	8-759-012-02	s	IC MC10H124M
IC811	8-759-012-02	s	IC MC10H124M
IC812	8-759-012-02	s	IC MC10H124M
IC813	8-759-904-80	s	IC 74F04PC
IC814	8-759-203-50	s	IC TC74HC574P
IC815	8-759-147-05	s	IC UPD42101G-3
IC816	8-759-203-50	s	IC TC74HC574P
IC900	8-759-929-26	s	IC TL431CPS
IC901	8-759-982-25	s	IC RC78L09A
L900	1-421-329-00	s	COIL, CHOKE
L901	1-421-329-00	s	COIL, CHOKE
L902	1-421-329-00	s	COIL, CHOKE
L903	1-421-329-00	s	COIL, CHOKE
L904	1-421-329-00	s	COIL, CHOKE
Q201	8-729-100-66	s	TRANSISTOR 2SC1623
Q202	8-729-102-07	s	TRANSISTOR 2SC2223-F13
Q203	8-729-102-07	s	TRANSISTOR 2SC2223-F13
Q204	8-729-100-66	s	TRANSISTOR 2SC1623
Q250	8-729-100-66	s	TRANSISTOR 2SC1623
Q251	8-729-216-22	s	TRANSISTOR 2SA1162
Q400	8-729-100-66	s	TRANSISTOR 2SC1623
Q401	8-729-216-22	s	TRANSISTOR 2SA1162
Q402	8-729-216-22	s	TRANSISTOR 2SA1162
Q500	8-729-100-66	s	TRANSISTOR 2SC1623
Q501	8-729-100-66	s	TRANSISTOR 2SC1623
Q502	8-729-100-66	s	TRANSISTOR 2SC1623

NOTE: Please see pages 19-51 and 19-52 for the parts that are not listed in the part list.

(TBC-12PC BOARD)

Ref. No. or Q'ty	Part No.	SP	Description
Q503	8-729-100-66	s	TRANSISTOR 2SC1623
Q504	8-729-100-66	s	TRANSISTOR 2SC1623
Q505	8-729-100-66	s	TRANSISTOR 2SC1623
Q801	8-729-900-53	s	TRANSISTOR DTC114EK
Q802	8-729-900-53	s	TRANSISTOR DTC114EK
Q803	8-729-900-53	s	TRANSISTOR DTC114EK
Q900	8-729-106-68	s	TRANSISTOR 2SC1615A-GP
R138	1-216-667-11	s	METAL, CHIP 4.7K 0.5% 1/10W
R139	1-216-667-11	s	METAL, CHIP 4.7K 0.5% 1/10W
R140	1-216-680-11	s	METAL, CHIP 16K 0.5% 1/10W
R141	1-216-675-11	s	METAL, CHIP 10K 0.5% 1/10W
R142	1-216-662-11	s	METAL, CHIP 3K 0.5% 1/10W
R143	1-216-667-11	s	METAL, CHIP 4.7K 0.5% 1/10W
R144	1-216-676-11	s	METAL, CHIP 11K 0.5% 1/10W
R145	1-216-683-11	s	METAL, CHIP 22K 0.5% 1/10W
R146	1-216-672-11	s	METAL, CHIP 7.5K 0.5% 1/10W
R202	1-216-672-11	s	METAL, CHIP 7.5K 0.5% 1/10W
R203	1-216-679-11	s	METAL, CHIP 15K 0.5% 1/10W
R204	1-216-679-11	s	METAL, CHIP 15K 0.5% 1/10W
R205	1-216-661-11	s	METAL, CHIP 2.7K 0.5% 1/10W
R206	1-216-674-11	s	METAL, CHIP 9.1K 0.5% 1/10W
R208	1-216-677-11	s	METAL, CHIP 12K 0.5% 1/10W
R209	1-216-676-11	s	METAL, CHIP 11K 0.5% 1/10W
R216	1-216-660-11	s	METAL, CHIP 2.4K 0.5% 1/10W
R217	1-216-672-11	s	METAL, CHIP 7.5K 0.5% 1/10W
R220	1-216-679-11	s	METAL, CHIP 15K 0.5% 1/10W
R223	1-216-678-11	s	METAL, CHIP 13K 0.5% 1/10W
R229	1-216-679-11	s	METAL, CHIP 15K 0.5% 1/10W
R254	1-216-638-11	s	METAL, CHIP 300 0.5% 1/10W
R255	1-216-638-11	s	METAL, CHIP 300 0.5% 1/10W
R256	1-216-623-11	s	METAL, CHIP 68 0.5% 1/10W
R257	1-216-651-11	s	METAL, CHIP 1K 0.5% 1/10W
R258	1-216-656-11	s	METAL, CHIP 1.6K 0.5% 1/10W
R260	1-216-655-11	s	METAL, CHIP 1.5K 0.5% 1/10W
R261	1-216-643-11	s	METAL, CHIP 470 0.5% 1/10W
R262	1-216-635-11	s	METAL, CHIP 220 0.5% 1/10W
R266	1-216-619-11	s	METAL, CHIP 47 0.5% 1/10W
R268	1-216-658-11	s	METAL, CHIP 2K 0.5% 1/10W
R269	1-216-642-11	s	METAL, CHIP 430 0.5% 1/10W
R270	1-216-648-11	s	METAL, CHIP 750 0.5% 1/10W
R273	1-217-666-31	s	RES, SHORTING 0.01 1/6W
R418	1-216-677-11	s	METAL, CHIP 12K 0.5% 1/10W
R424	1-216-683-11	s	METAL, CHIP 22K 0.5% 1/10W
R425	1-216-673-11	s	METAL, CHIP 8.2K 0.5% 1/10W
R426	1-216-675-11	s	METAL, CHIP 10K 0.5% 1/10W
R427	1-216-655-11	s	METAL, CHIP 1.5K 0.5% 1/10W
R428	1-216-655-11	s	METAL, CHIP 1.5K 0.5% 1/10W
R430	1-216-659-11	s	METAL, CHIP 2.2K 0.5% 1/10W
R432	1-216-667-11	s	METAL, CHIP 4.7K 0.5% 1/10W
R433	1-216-667-11	s	METAL, CHIP 4.7K 0.5% 1/10W
R510	1-216-679-11	s	METAL, CHIP 15K 0.5% 1/10W
R511	1-216-679-11	s	METAL, CHIP 15K 0.5% 1/10W
R512	1-216-672-11	s	METAL, CHIP 7.5K 0.5% 1/10W
R513	1-216-679-11	s	METAL, CHIP 15K 0.5% 1/10W
R514	1-216-661-11	s	METAL, CHIP 2.7K 0.5% 1/10W
R515	1-216-674-11	s	METAL, CHIP 9.1K 0.5% 1/10W

(TBC-12PC BOARD)

Ref. No. or Q'ty	Part No.	SP	Description
R520	1-216-646-11	s	METAL, CHIP 620 0.5% 1/10W
R521	1-216-653-11	s	METAL, CHIP 1.2K 0.5% 1/10W
R524	1-216-624-11	s	METAL, CHIP 75 0.5% 1/10W
R529	1-216-660-11	s	METAL, CHIP 2.4K 0.5% 1/10W
R530	1-216-674-11	s	METAL, CHIP 9.1K 0.5% 1/10W
R535	1-216-646-11	s	METAL, CHIP 620 0.5% 1/10W
R536	1-216-653-11	s	METAL, CHIP 1.2K 0.5% 1/10W
R539	1-216-624-11	s	METAL, CHIP 75 0.5% 1/10W
R540	1-216-677-11	s	METAL, CHIP 12K 0.5% 1/10W
R541	1-216-660-11	s	METAL, CHIP 2.4K 0.5% 1/10W
R542	1-216-678-11	s	METAL, CHIP 13K 0.5% 1/10W
R546	1-216-635-11	s	METAL, CHIP 220 0.5% 1/10W
R549	1-216-682-11	s	METAL, CHIP 20K 0.5% 1/10W
R571	1-216-635-11	s	METAL, CHIP 220 0.5% 1/10W
R572	1-216-635-11	s	METAL, CHIP 220 0.5% 1/10W
R573	1-216-677-11	s	METAL, CHIP 12K 0.5% 1/10W
R605	1-216-679-11	s	METAL, CHIP 15K 0.5% 1/10W
R901	1-216-675-11	s	METAL, CHIP 10K 0.5% 1/10W
R902	1-216-675-11	s	METAL, CHIP 10K 0.5% 1/10W
RV200	1-237-501-21	s	RES, ADJ, METAL 2K
RV250	1-237-501-21	s	RES, ADJ, METAL 2K
RV400	1-237-514-21	s	RES, ADJ, METAL 500
RV500	1-237-501-21	s	RES, ADJ, METAL 2K
RV501	1-237-501-21	s	RES, ADJ, METAL 2K
RV502	1-237-499-21	s	RES, ADJ, METAL 500
RV601	1-237-518-21	s	RES, ADJ, METAL 10K
S500	1-554-149-21	s	SWITCH, DIP 4-CKT

NOTE: Please see pages 19-51 and 19-52 for the parts that are not listed in the part list.

TC-40PC BOARD

Ref. No. or Q'ty	Part No.	SP	Description
1pc	A-6717-583-A	o	MOUNTED CIRCUIT BOARD, TC-40PC
This board includes TD-10 board. See "TD-10 BOARD" for details of it.			
1pc	7-621-759-45	s	+PSW, 2.6X6
2pcs	7-622-207-05	s	N 2.6, TYPE 2
1pc	7-623-422-07	s	LW 3, TYPE B
2pcs	7-628-254-30	s	SCREW +PS 2.6X10
C1	1-124-120-11	s	ELECT 220uF 20% 25V
C2	1-124-120-11	s	ELECT 220uF 20% 25V
C6	1-131-352-00	s	TANTALUM 6.8uF 10% 35V
C10	1-131-374-00	s	TANTALUM 33uF 10% 16V
C12	1-131-352-00	s	TANTALUM 6.8uF 10% 35V
C16	1-131-374-00	s	TANTALUM 33uF 10% 16V
C18	1-131-353-00	s	TANTALUM 10uF 10% 35V
C21	1-131-350-00	s	TANTALUM 3.3uF 10% 35V
C22	1-131-353-00	s	TANTALUM 10uF 10% 35V
C26	1-130-483-00	s	MYLAR 0.01uF 5% 50V
C31	1-130-483-00	s	MYLAR 0.01uF 5% 50V
C36	1-130-483-00	s	MYLAR 0.01uF 5% 50V
C41	1-130-491-00	s	MYLAR 0.047uF 5% 50V
C42	1-130-491-00	s	MYLAR 0.047uF 5% 50V
C47	1-130-488-00	s	MYLAR 0.027uF 5% 50V
C48	1-130-477-00	s	MYLAR 0.0033uF 5% 50V
C49	1-130-479-00	s	MYLAR 0.0047uF 5% 50V
C50	1-130-482-00	s	MYLAR 0.0082uF 5% 50V
C51	1-130-479-00	s	MYLAR 0.0047uF 5% 50V
C52	1-130-475-00	s	MYLAR 0.0022uF 5% 50V
C53	1-130-483-00	s	MYLAR 0.01uF 5% 50V
C54	1-130-480-00	s	MYLAR 0.0056uF 5% 50V
C55	1-130-476-00	s	MYLAR 0.0027uF 5% 50V
C56	1-131-350-00	s	TANTALUM 3.3uF 10% 35V
C57	1-124-910-11	s	ELECT 47uF 20% 50V
C58	1-124-910-11	s	ELECT 47uF 20% 50V
C64	1-131-348-00	s	TANTALUM 1.5uF 10% 35V
C65	1-131-348-00	s	TANTALUM 1.5uF 10% 35V
C66	1-131-348-00	s	TANTALUM 1.5uF 10% 35V
C67	1-131-348-00	s	TANTALUM 1.5uF 10% 35V
C68	1-131-348-00	s	TANTALUM 1.5uF 10% 35V
C69	1-131-348-00	s	TANTALUM 1.5uF 10% 35V
C70	1-131-348-00	s	TANTALUM 1.5uF 10% 35V
C71	1-131-348-00	s	TANTALUM 1.5uF 10% 35V
C72	1-163-131-00	s	CERAMIC, CHIP 390PF 5% 50V
C73	1-163-131-00	s	CERAMIC, CHIP 390PF 5% 50V
C74	1-130-487-00	s	MYLAR 0.022uF 5% 50V
C75	1-130-488-00	s	MYLAR 0.027uF 5% 50V
C76	1-107-075-00	s	MICA 39PF 5% 50V
C81	1-124-443-00	s	ELECT 100uF 20% 10V
C82	1-124-443-00	s	ELECT 100uF 20% 10V
C83	1-131-350-00	s	TANTALUM 3.3uF 10% 35V
C84	1-131-350-00	s	TANTALUM 3.3uF 10% 35V
C85	1-124-120-11	s	ELECT 220uF 20% 25V
C86	1-124-120-11	s	ELECT 220uF 20% 25V
C87	1-124-120-11	s	ELECT 220uF 20% 25V
C92	1-124-120-11	s	ELECT 220uF 20% 25V
C94	1-124-120-11	s	ELECT 220uF 20% 25V
C209	1-123-875-11	s	ELECT 10uF 20% 50V

(TC-40PC BOARD)

Ref. No. or Q'ty	Part No.	SP	Description
C214	1-123-875-11	s	ELECT 10uF 20% 50V
C217	1-123-875-11	s	ELECT 10uF 20% 50V
C220	1-123-875-11	s	ELECT 10uF 20% 50V
C222	1-126-103-11	s	ELECT 470uF 20% 16V
C224	1-126-103-11	s	ELECT 470uF 20% 16V
C228	1-130-487-00	s	MYLAR 0.022uF 5% 50V
C232	1-123-875-11	s	ELECT 10uF 20% 50V
C238	1-123-875-11	s	ELECT 10uF 20% 50V
C244	1-130-488-00	s	MYLAR 0.027uF 5% 50V
C245	1-126-176-11	s	ELECT 220uF 20% 10V
C246	1-124-791-11	s	ELECT 1uF 20% 50V
C247	1-130-483-00	s	MYLAR 0.01uF 5% 50V
C251	1-123-875-11	s	ELECT 10uF 20% 50V
C255	1-123-875-11	s	ELECT 10uF 20% 50V
C256	1-123-875-11	s	ELECT 10uF 20% 50V
C259	1-130-480-00	s	MYLAR 0.0056uF 5% 50V
C260	1-130-489-00	s	MYLAR 0.033uF 5% 50V
C261	1-130-489-00	s	MYLAR 0.033uF 5% 50V
C272	1-126-103-11	s	ELECT 470uF 20% 16V
C273	1-126-103-11	s	ELECT 470uF 20% 16V
C276	1-126-233-11	s	ELECT 22uF 20% 50V
C277	1-126-233-11	s	ELECT 22uF 20% 50V
C278	1-124-120-11	s	ELECT 220uF 20% 25V
C280	1-124-791-11	s	ELECT 1uF 20% 50V
C406	1-124-791-11	s	ELECT 1uF 20% 50V
CN205	1-506-748-11	s	CONNECTOR, DIN 96P, MALE
CP1	1-464-800-12	s	OSCILLATOR, ERASE
D1	8-719-104-34	s	DIODE 1S2835
D2	8-719-104-34	s	DIODE 1S2835
D3	8-719-104-34	s	DIODE 1S2835
D4	8-719-104-34	s	DIODE 1S2835
D5	8-719-104-34	s	DIODE 1S2835
D201	8-719-800-76	s	DIODE 1SS226
D203	8-719-800-76	s	DIODE 1SS226
D204	8-719-800-76	s	DIODE 1SS226
D206	8-719-104-34	s	DIODE 1S2835
D207	8-719-800-76	s	DIODE 1SS226
D401	8-719-104-34	s	DIODE 1S2835
D403	8-719-104-34	s	DIODE 1S2835
IC1	8-759-982-04	s	IC RC5532M
IC2	8-759-982-04	s	IC RC5532M
IC3	8-759-982-04	s	IC RC5532M
IC201	8-759-981-92	s	IC RC4558M
IC202	8-759-981-92	s	IC RC4558M
IC203	8-759-009-07	s	IC MC14053BF
IC204	8-759-981-65	s	IC LM2903M
IC205	8-759-009-06	s	IC MC14052BF
IC206	8-759-981-48	s	IC NJM082M
IC207	8-759-009-06	s	IC MC14052BF
IC208	8-759-981-92	s	IC RC4558M
IC209	8-759-009-07	s	IC MC14053BF
IC210	8-759-981-92	s	IC RC4558M
IC211	8-759-982-02	s	IC RC4562DD
IC212	8-759-009-51	s	IC MC14538BF

NOTE: Please see pages 19-51 and 19-52 for the parts that are not listed in the part list.

(TC-40PC BOARD)

Ref. No. or Q'ty	Part No.	SP	Description
IC213	8-759-008-95	s	IC MC14028BF
IC214	8-759-204-06	s	IC TC4075BF
IC215	8-759-981-85	s	IC RC4556D
IC216	8-759-981-92	s	IC RC4558M
IC401	8-759-970-83	s	IC MB88525-190M
IC402	8-759-009-67	s	IC MC14584BF
IC403	8-759-009-10	s	IC MC14069UBF
IC404	8-759-914-03	s	IC SN74LS06N
IC405	8-759-009-10	s	IC MC14069UBF
IC406	8-759-600-61	s	IC M54529AP
IC407	8-759-008-79	s	IC MC14011BF
IC408	8-759-008-79	s	IC MC14011BF
IC409	8-759-008-79	s	IC MC14011BF
IC410	8-759-205-78	s	IC TC504013BF
IC411	8-759-205-78	s	IC TC504013BF
IC412	8-759-205-78	s	IC TC504013BF
IC413	8-759-914-03	s	IC SN74LS06N
IC415	8-759-009-10	s	IC MC14069UBF
L1	1-459-155-00	s	COIL 45uH
L2	1-459-155-00	s	COIL 45uH
L3	1-459-155-00	s	COIL 45uH
L4	1-459-155-00	s	COIL 45uH
L5	1-459-155-00	s	COIL 45uH
L201	1-459-155-00	s	COIL 45uH
L202	1-459-155-00	s	COIL 45uH
L401	1-459-155-00	s	COIL 45uH
Q1	8-729-216-22	s	TRANSISTOR 2SA1162
Q2	8-729-216-22	s	TRANSISTOR 2SA1162
Q3	8-729-202-38	s	TRANSISTOR 2SC3326N
Q4	8-729-216-22	s	TRANSISTOR 2SA1162
Q5	8-729-216-22	s	TRANSISTOR 2SA1162
Q6	8-729-216-22	s	TRANSISTOR 2SA1162
Q7	8-729-202-38	s	TRANSISTOR 2SC3326N
Q8	8-729-216-22	s	TRANSISTOR 2SA1162
Q9	8-729-216-22	s	TRANSISTOR 2SA1162
Q10	8-729-216-22	s	TRANSISTOR 2SA1162
Q11	8-729-202-38	s	TRANSISTOR 2SC3326N
Q12	8-729-216-22	s	TRANSISTOR 2SA1162
Q13	8-729-271-23	s	TRANSISTOR 2SC2712
Q14	8-729-216-22	s	TRANSISTOR 2SA1162
Q15	8-729-177-33	s	TRANSISTOR 2SD773-4
Q16	8-729-113-34	s	TRANSISTOR 2SB733-5
Q17	8-729-271-23	s	TRANSISTOR 2SC2712
Q18	8-729-216-22	s	TRANSISTOR 2SA1162
Q19	8-729-177-33	s	TRANSISTOR 2SD773-4
Q20	8-729-113-34	s	TRANSISTOR 2SB733-5
Q21	8-729-271-23	s	TRANSISTOR 2SC2712
Q22	8-729-216-22	s	TRANSISTOR 2SA1162
Q23	8-729-177-33	s	TRANSISTOR 2SD773-4
Q24	8-729-113-34	s	TRANSISTOR 2SB733-5
Q25	8-729-107-84	s	TRANSISTOR 2SC3623A-L
Q26	8-729-107-84	s	TRANSISTOR 2SC3623A-L
Q27	8-729-107-84	s	TRANSISTOR 2SC3623A-L
Q28	8-729-107-84	s	TRANSISTOR 2SC3623A-L
Q29	8-729-107-84	s	TRANSISTOR 2SC3623A-L
Q30	8-729-107-84	s	TRANSISTOR 2SC3623A-L

(TC-40PC BOARD)

Ref. No. or Q'ty	Part No.	SP	Description
Q31	8-729-216-22	s	TRANSISTOR 2SA1162
Q32	8-729-205-95	s	TRANSISTOR 2SB822-R
Q33	8-729-271-23	s	TRANSISTOR 2SC2712
Q34	8-729-271-23	s	TRANSISTOR 2SC2712
Q35	8-729-271-23	s	TRANSISTOR 2SC2712
Q36	8-729-216-22	s	TRANSISTOR 2SA1162
Q37	8-729-271-23	s	TRANSISTOR 2SC2712
Q38	8-729-901-04	s	TRANSISTOR DTA114EK
Q39	8-729-202-38	s	TRANSISTOR 2SC3326N
Q40	8-729-202-38	s	TRANSISTOR 2SC3326N
Q201	8-729-119-78	s	TRANSISTOR 2SC2785-HFE
Q202	8-729-119-76	s	TRANSISTOR 2SA1115P
Q203	8-729-271-23	s	TRANSISTOR 2SC2712
Q204	8-729-271-23	s	TRANSISTOR 2SC2712
Q205	8-729-901-06	s	TRANSISTOR DTA144EK
Q206	8-729-901-06	s	TRANSISTOR DTA144EK
Q207	8-729-202-38	s	TRANSISTOR 2SC3326N
Q208	8-729-202-38	s	TRANSISTOR 2SC3326N
Q209	8-729-202-38	s	TRANSISTOR 2SC3326N
Q210	8-729-202-38	s	TRANSISTOR 2SC3326N
Q211	8-729-271-23	s	TRANSISTOR 2SC2712
Q212	8-729-271-23	s	TRANSISTOR 2SC2712
Q213	8-729-109-44	s	TRANSISTOR 2SK94
Q214	8-729-901-06	s	TRANSISTOR DTA144EK
Q215	8-729-901-06	s	TRANSISTOR DTA144EK
Q401	8-729-271-23	s	TRANSISTOR 2SC2712
Q402	8-729-271-23	s	TRANSISTOR 2SC2712
R15	1-216-675-11	s	METAL, CHIP 10K 0.5% 1/10W
R16	1-216-647-11	s	METAL, CHIP 680 0.5% 1/10W
R18	1-216-655-11	s	METAL, CHIP 1.5K 0.5% 1/10W
R33	1-216-675-11	s	METAL, CHIP 10K 0.5% 1/10W
R34	1-216-647-11	s	METAL, CHIP 680 0.5% 1/10W
R36	1-216-655-11	s	METAL, CHIP 1.5K 0.5% 1/10W
R55	1-216-671-11	s	METAL, CHIP 6.8K 0.5% 1/10W
R58	1-216-671-11	s	METAL, CHIP 6.8K 0.5% 1/10W
R66	1-216-659-11	s	METAL, CHIP 2.2K 0.5% 1/10W
R67	1-216-658-11	s	METAL, CHIP 2K 0.5% 1/10W
R73	1-249-387-11	s	CARBON 3.3 5% 1/4W
R74	1-249-387-11	s	CARBON 3.3 5% 1/4W
R80	1-249-387-11	s	CARBON 3.3 5% 1/4W
R81	1-249-387-11	s	CARBON 3.3 5% 1/4W
R84	1-216-651-11	s	METAL, CHIP 1K 0.5% 1/10W
R87	1-249-387-11	s	CARBON 3.3 5% 1/4W
R88	1-249-387-11	s	CARBON 3.3 5% 1/4W
R94	1-249-381-11	s	CARBON 1 5% 1/4W
R97	1-249-381-11	s	CARBON 1 5% 1/4W
R100	1-249-381-11	s	CARBON 1 5% 1/4W
R109	1-249-381-11	s	CARBON 1 5% 1/4W
R110	1-216-651-11	s	METAL, CHIP 1K 0.5% 1/10W
R118	1-216-653-11	s	METAL, CHIP 1.2K 0.5% 1/10W
R120	1-216-653-11	s	METAL, CHIP 1.2K 0.5% 1/10W
R121	1-216-651-11	s	METAL, CHIP 1K 0.5% 1/10W
R122	1-216-651-11	s	METAL, CHIP 1K 0.5% 1/10W
#R212	1-216-081-00	s	METAL, CHIP 22K 5% 1/10W
#R221	1-216-081-00	s	METAL, CHIP 22K 5% 1/10W
#R227	1-216-666-11	s	METAL, CHIP 4.3K 0.5% 1/10W

NOTE: Please see pages 19-51 and 19-52 for the parts that are not listed in the part list.

(TC-40PC BOARD)

Ref. No. or Q'ty	Part No.	SP	Description
R238	1-216-675-11	s	METAL, CHIP 10K 0.5% 1/10W
R330	1-215-424-00	s	METAL 1.3K 1% 1/6W
R331	1-215-424-00	s	METAL 1.3K 1% 1/6W
R337	1-216-675-11	s	METAL, CHIP 10K 0.5% 1/10W
R338	1-216-647-11	s	METAL, CHIP 680 0.5% 1/10W
R341	1-216-624-11	s	METAL, CHIP 75 0.5% 1/10W
R342	1-216-676-11	s	METAL, CHIP 11K 0.5% 1/10W
R343	1-216-624-11	s	METAL, CHIP 75 0.5% 1/10W
R344	1-216-675-11	s	METAL, CHIP 10K 0.5% 1/10W
R345	1-216-663-11	s	METAL, CHIP 3.3K 0.5% 1/10W
R346	1-216-663-11	s	METAL, CHIP 3.3K 0.5% 1/10W
R347	1-216-663-11	s	METAL, CHIP 3.3K 0.5% 1/10W
R348	1-216-663-11	s	METAL, CHIP 3.3K 0.5% 1/10W
R349	1-216-675-11	s	METAL, CHIP 10K 0.5% 1/10W
R359	1-216-691-11	s	METAL, CHIP 47K 0.5% 1/10W
R450	1-215-373-31	s	METAL 10 1% 1/6W
R451	1-215-416-00	s	METAL 620 1% 1/6W
RV1	1-237-518-21	s	RES, ADJ, METAL 10K
RV2	1-237-518-21	s	RES, ADJ, METAL 10K
RV3	1-237-518-21	s	RES, ADJ, METAL 10K
RV4	1-237-519-21	s	RES, ADJ, METAL 20K
RV5	1-237-512-21	s	RES, ADJ, METAL 100
RV6	1-237-518-21	s	RES, ADJ, METAL 10K
RV7	1-237-515-21	s	RES, ADJ, METAL 1K
RV202	1-237-516-21	s	RES, ADJ, METAL 2K
S1	1-570-602-11	s	SWITCH, DIP 2-CKT
S2	1-570-619-11	s	SWITCH, DIP 3-CKT
S3	1-570-619-11	s	SWITCH, DIP 3-CKT
TH1	1-800-200-00	s	THERMISTOR S-3K
TH2	1-800-200-00	s	THERMISTOR S-3K
X401	1-567-143-00	s	RESONATOR, CERAMIC 6.00MHz

TD-10 BOARD

Ref. No. or Q'ty	Part No.	SP	Description
This board is included in TC-40PC board.			
1pc	1-635-442-11	o	PRINTED CIRCUIT BOARD, TD-10
C2	1-130-487-00	s	MYLAR 0.022uF 5% 50V
C4	1-102-959-00	s	CERAMIC 22PF 5% 50V
C5	1-102-959-00	s	CERAMIC 22PF 5% 50V
IC1	8-759-503-11	s	IC CXD8167Q
IC2	8-759-981-65	s	IC LM2903M
R4	1-247-895-00	s	CARBON 470K 5% 1/4W
X1	1-567-867-11	s	CRYSTAL, 14.500MHz

TG-52 BOARD

Ref. No. or Q'ty	Part No.	SP	Description
This board is included in TBC-9PC board.			
1pc	1-635-406-11	o	PRINTED CIRCUIT BOARD, TG-52
CN1	1-566-095-11	o	CONNECTOR, BB 11P, MALE
IC1	8-759-926-21	s	IC SN74HC161NS
IC2	8-759-926-21	s	IC SN74HC161NS
IC3	8-759-927-46	s	IC SN74HC00NS

TG-52A BOARD

Ref. No. or Q'ty	Part No.	SP	Description
This board is included in TBC-12PC board.			
1pc	1-635-406-11	o	PRINTED CIRCUIT BOARD, TG-52
IC1	8-759-926-21	s	IC SN74HC161NS
IC2	8-759-926-21	s	IC SN74HC161NS
IC3	8-759-927-46	s	IC SN74HC00NS

TR-18 BOARD

Ref. No. or Q'ty	Part No.	SP	Description
1pc	1-611-279-13	o	PRINTED CIRCUIT BOARD, TR-18
CN1	1-508-902-00	o	CONNECTOR, 4P, MALE
RM1	8-749-020-80	s	DME DM208

NOTE: Please see pages 19-51 and 19-52 for the parts that are not listed in the part list.

VO-18P BOARD

Ref. No. or Q'ty	Part No.	SP	Description
1pc	A-6711-892-B	o	MOUNTED CIRCUIT BOARD, VO-18P
This board includes DUS-270 board. See "DUS-270" for details of it.			
2pcs	7-622-207-05	s	N 2.6, TYPE 2
2pcs	7-628-254-30	s	SCREW +PS 2.6X10
C12	1-130-491-00	s	MYLAR 0.047uF 5% 50V
C13	1-131-374-00	s	TANTALUM 33uF 10% 16V
C14	1-131-374-00	s	TANTALUM 33uF 10% 16V
C15	1-126-154-11	s	ELECT 47uF 20% 6.3V
C16	1-131-374-00	s	TANTALUM 33uF 10% 16V
C18	1-163-111-00	s	CERAMIC, CHIP 56PF 5% 50V
C20	1-124-225-00	s	ELECT 100uF 20% 6.3V
C30	1-126-153-11	s	ELECT 22uF 20% 6.3V
C32	1-124-438-00	s	ELECT 1uF 20% 50V
C33	1-107-048-00	s	MICA 6.8PF 500V
C49	1-163-089-00	s	CERAMIC, CHIP 6PF 50V
C60	1-131-374-00	s	TANTALUM 33uF 10% 16V
C62	1-107-209-00	s	MICA 20PF 5% 500V
C63	1-109-542-00	s	MICA 220PF 5% 100V
C76	1-124-225-00	s	ELECT 100uF 20% 6.3V
C78	1-126-154-11	s	ELECT 47uF 20% 6.3V
C87	1-126-154-11	s	ELECT 47uF 20% 6.3V
C201	1-107-209-00	s	MICA 20PF 5% 500V
C202	1-109-542-00	s	MICA 220PF 5% 100V
C203	1-107-209-00	s	MICA 20PF 5% 500V
C204	1-109-542-00	s	MICA 220PF 5% 100V
C502	1-131-374-00	s	TANTALUM 33uF 10% 16V
C606	1-124-927-11	s	ELECT 4.7uF 20% 100V
C607	1-124-927-11	s	ELECT 4.7uF 20% 100V
C608	1-126-233-11	s	ELECT 22uF 20% 50V
C609	1-131-377-00	s	TANTALUM 10uF 10% 10V
C611	1-124-791-11	s	ELECT 1uF 20% 50V
C613	1-124-791-11	s	ELECT 1uF 20% 50V
C616	1-124-443-00	s	ELECT 100uF 20% 10V
C626	1-124-927-11	s	ELECT 4.7uF 20% 100V
C627	1-124-927-11	s	ELECT 4.7uF 20% 100V
C628	1-126-233-11	s	ELECT 22uF 20% 50V
C629	1-131-377-00	s	TANTALUM 10uF 10% 10V
C631	1-124-791-11	s	ELECT 1uF 20% 50V
C633	1-124-791-11	s	ELECT 1uF 20% 50V
C635	1-130-489-00	s	MYLAR 0.033uF 5% 50V
C646	1-126-233-11	s	ELECT 22uF 20% 50V
C648	1-126-233-11	s	ELECT 22uF 20% 50V
C651	1-130-487-00	s	MYLAR 0.022uF 5% 50V
C653	1-130-486-00	s	MYLAR 0.018uF 10% 50V
C708	1-131-347-00	s	TANTALUM 1uF 10% 35V
C709	1-131-347-00	s	TANTALUM 1uF 10% 35V
C711	1-131-350-00	s	TANTALUM 3.3uF 10% 35V
C712	1-131-350-00	s	TANTALUM 3.3uF 10% 35V
C717	1-124-927-11	s	ELECT 4.7uF 20% 100V
C722	1-124-234-00	s	ELECT 22uF 20% 16V
C723	1-124-234-00	s	ELECT 22uF 20% 16V
C724	1-124-229-00	s	ELECT 33uF 20% 10V
C725	1-126-154-11	s	ELECT 47uF 20% 6.3V
C728	1-130-499-00	s	MYLAR 0.22uF 5% 50V

(VO-18P BOARD)

Ref. No. or Q'ty	Part No.	SP	Description
C729	1-124-229-00	s	ELECT 33uF 20% 10V
C730	1-124-225-00	s	ELECT 100uF 20% 6.3V
C731	1-124-225-00	s	ELECT 100uF 20% 6.3V
CN103	1-506-748-11	s	CONNECTOR, DIN 96P, MALE
CV1	1-141-260-00	s	CAP, TRIMMER 50PF
D1	8-719-800-76	s	DIODE 1SS226
D601	8-719-800-76	s	DIODE 1SS226
D602	8-719-800-76	s	DIODE 1SS226
D603	8-719-921-11	s	DIODE HZ2ALL
D604	8-719-921-11	s	DIODE HZ2ALL
D605	8-719-800-76	s	DIODE 1SS226
DL1	1-415-565-11	s	DELAY LINE 310+60nS
DL2	1-415-543-11	s	DELAY LINE 300nS
DL700	1-415-538-11	s	DELAY LINE 100ns
FB601	1-535-178-00	s	BEAD, FERRITE
FB602	1-535-178-00	s	BEAD, FERRITE
FL1	1-236-393-11	s	FILTER, LOW-PASS
FL601	1-236-014-11	s	FILTER, BADDPASS 310KHz
FL602	1-236-015-11	s	FILTER, BANDPASS 540KHz
FL603	1-236-590-11	s	FILTER, LOW-PASS
FL604	1-236-590-11	s	FILTER, LOW-PASS
FL700	1-236-091-11	s	FILTER, LOW-PASS
FL701	1-236-091-11	s	FILTER, LOW-PASS
IC1	8-759-014-29	s	IC MC34184M
IC3	8-759-947-82	s	IC TL610CPS
IC4	8-752-015-81	s	IC CX20158
IC5	8-752-015-81	s	IC CX20158
IC6	8-752-015-81	s	IC CX20158
IC7	8-759-927-46	s	IC SN74HC00NS
IC8	8-759-941-17	s	IC SN74LS06NS
IC9	8-759-925-76	s	IC SN74HC08NS
IC10	8-759-925-74	s	IC SN74HC04NS
IC11	8-752-015-81	s	IC CX20158
IC12	8-752-015-81	s	IC CX20158
IC13	8-752-015-81	s	IC CX20158
IC14	8-752-015-81	s	IC CX20158
IC15	8-759-908-17	s	IC TL082CPS
IC16	8-759-009-07	s	IC MC14053BF
IC17	8-759-030-16	s	IC MC34182M
IC100	8-759-982-21	s	IC RC78L05A
IC101	8-759-982-23	s	IC TA78L008AP
IC102	8-759-982-44	s	IC RC79L05A
IC103	8-759-982-46	s	IC RC79L08A
IC104	8-759-982-21	s	IC RC78L05A
IC105	8-759-982-44	s	IC RC79L05A
IC106	8-759-982-21	s	IC RC78L05A
IC107	8-759-982-44	s	IC RC79L05A
IC108	8-759-941-79	s	IC S-80230AG
IC109	8-759-982-23	s	IC TA78L008AP
IC110	8-759-982-44	s	IC RC79L05A
IC111	8-759-937-61	s	IC S-81230AG
IC112	8-759-982-21	s	IC RC78L05A
IC113	8-759-982-44	s	IC RC79L05A

NOTE: Please see pages 19-51 and 19-52 for the parts that are not listed in the part list.

(VO-18P BOARD)

Ref. No. or Q'ty	Part No.	SP	Description
IC601	8-752-011-10	s	IC CX20111
IC602	8-752-011-10	s	IC CX20111
IC603	8-759-009-11	s	IC MC14070BF
IC604	8-759-981-92	s	IC RC4558M
IC605	8-759-205-78	s	IC TC504013BF
IC606	8-759-009-51	s	IC MC14538BF
IC700	8-759-941-27	s	IC MB4002PF
IC701	8-759-929-80	s	IC SN74LS08NS
IC702	8-743-810-00	s	IC BX381
IC703	8-759-030-16	s	IC MC34182M
IC704	8-759-100-93	s	IC UPC393G2
#IC705	8-759-008-52	s	IC MC74HC123AF
IC706	8-759-947-82	s	IC TL610CPS
IC707	8-752-015-81	s	IC CX20158
IC708	8-759-929-78	s	IC SN74LS04NS
L1	1-421-329-00	s	COIL, CHOKE
L2	1-421-329-00	s	COIL, CHOKE
L3	1-421-329-00	s	COIL, CHOKE
L4	1-421-329-00	s	COIL, CHOKE
L5	1-421-329-00	s	COIL, CHOKE
L19	1-408-406-00	s	INDUCTOR 5.6uH
LV1	1-407-575-00	s	COIL, VAR 100uH
LV2	1-407-575-00	s	COIL, VAR 100uH
Q1	8-729-100-66	s	TRANSISTOR 2SC1623
Q2	8-729-100-66	s	TRANSISTOR 2SC1623
Q3	8-729-201-27	s	TRANSISTOR 2SC2715-Y
Q4	8-729-201-27	s	TRANSISTOR 2SC2715-Y
Q5	8-729-201-27	s	TRANSISTOR 2SC2715-Y
Q6	8-729-102-07	s	TRANSISTOR 2SC2223-F13
Q7	8-729-201-27	s	TRANSISTOR 2SC2715-Y
Q8	8-729-201-27	s	TRANSISTOR 2SC2715-Y
Q9	8-729-201-27	s	TRANSISTOR 2SC2715-Y
Q10	8-729-201-27	s	TRANSISTOR 2SC2715-Y
Q11	8-729-907-26	s	TRANSISTOR IMX1
Q12	8-729-201-27	s	TRANSISTOR 2SC2715-Y
Q14	8-729-201-27	s	TRANSISTOR 2SC2715-Y
Q15	8-729-122-63	s	TRANSISTOR 2SA1226
Q16	8-729-201-27	s	TRANSISTOR 2SC2715-Y
Q17	8-729-201-27	s	TRANSISTOR 2SC2715-Y
Q18	8-729-201-27	s	TRANSISTOR 2SC2715-Y
Q19	8-729-216-22	s	TRANSISTOR 2SA1162
Q20	8-729-201-27	s	TRANSISTOR 2SC2715-Y
Q25	8-729-201-27	s	TRANSISTOR 2SC2715-Y
Q27	8-729-216-22	s	TRANSISTOR 2SA1162
Q28	8-729-100-66	s	TRANSISTOR 2SC1623
Q29	8-729-100-66	s	TRANSISTOR 2SC1623
Q30	8-729-904-41	s	TRANSISTOR FMY3
Q31	8-729-122-63	s	TRANSISTOR 2SA1226
Q32	8-729-201-27	s	TRANSISTOR 2SC2715-Y
Q35	8-729-201-27	s	TRANSISTOR 2SC2715-Y
Q36	8-729-201-27	s	TRANSISTOR 2SC2715-Y
Q37	8-729-201-27	s	TRANSISTOR 2SC2715-Y
Q38	8-729-907-26	s	TRANSISTOR IMX1
Q39	8-729-201-27	s	TRANSISTOR 2SC2715-Y
Q40	8-729-901-01	s	TRANSISTOR DTC144EK

(VO-18P BOARD)

Ref. No. or Q'ty	Part No.	SP	Description
Q501	8-729-216-22	s	TRANSISTOR 2SA1162
Q502	8-729-216-22	s	TRANSISTOR 2SA1162
Q503	8-729-902-96	s	TRANSISTOR FMS1
Q504	8-729-903-10	s	TRANSISTOR FMW1
Q601	8-729-271-22	s	TRANSISTOR 2SC2712-G
Q602	8-729-271-22	s	TRANSISTOR 2SC2712-G
Q603	8-729-271-22	s	TRANSISTOR 2SC2712-G
Q604	8-729-271-22	s	TRANSISTOR 2SC2712-G
Q605	8-729-271-22	s	TRANSISTOR 2SC2712-G
Q700	8-729-201-27	s	TRANSISTOR 2SC2715-Y
Q701	8-729-201-27	s	TRANSISTOR 2SC2715-Y
Q702	8-729-100-66	s	TRANSISTOR 2SC1623
Q703	8-729-100-66	s	TRANSISTOR 2SC1623
R1	1-216-638-11	s	METAL, CHIP 300 0.5% 1/10W
R2	1-216-639-11	s	METAL, CHIP 330 0.5% 1/10W
R4	1-216-639-11	s	METAL, CHIP 330 0.5% 1/10W
R5	1-216-641-11	s	METAL, CHIP 390 0.5% 1/10W
R7	1-216-647-11	s	METAL, CHIP 680 0.5% 1/10W
R8	1-216-641-11	s	METAL, CHIP 390 0.5% 1/10W
R11	1-216-641-11	s	METAL, CHIP 390 0.5% 1/10W
R14	1-216-659-11	s	METAL, CHIP 2.2K 0.5% 1/10W
R15	1-216-659-11	s	METAL, CHIP 2.2K 0.5% 1/10W
R16	1-216-627-11	s	METAL, CHIP 100 0.5% 1/10W
R17	1-216-650-11	s	METAL, CHIP 910 0.5% 1/10W
R18	1-216-659-11	s	METAL, CHIP 2.2K 0.5% 1/10W
R26	1-216-643-11	s	METAL, CHIP 470 0.5% 1/10W
R27	1-216-631-11	s	METAL, CHIP 150 0.5% 1/10W
R30	1-216-677-11	s	METAL, CHIP 12K 0.5% 1/10W
R31	1-216-645-11	s	METAL, CHIP 560 0.5% 1/10W
R32	1-216-627-11	s	METAL, CHIP 100 0.5% 1/10W
R33	1-216-639-11	s	METAL, CHIP 330 0.5% 1/10W
R34	1-216-639-11	s	METAL, CHIP 330 0.5% 1/10W
R39	1-216-653-11	s	METAL, CHIP 1.2K 0.5% 1/10W
R40	1-216-663-11	s	METAL, CHIP 3.3K 0.5% 1/10W
R41	1-216-651-11	s	METAL, CHIP 1K 0.5% 1/10W
R42	1-216-651-11	s	METAL, CHIP 1K 0.5% 1/10W
R43	1-216-659-11	s	METAL, CHIP 2.2K 0.5% 1/10W
R44	1-216-636-11	s	METAL, CHIP 240 0.5% 1/10W
R48	1-216-659-11	s	METAL, CHIP 2.2K 0.5% 1/10W
R50	1-216-611-11	s	METAL, CHIP 22 0.5% 1/10W
R51	1-216-611-11	s	METAL, CHIP 22 0.5% 1/10W
R58	1-216-644-11	s	METAL, CHIP 510 0.5% 1/10W
R62	1-216-641-11	s	METAL, CHIP 390 0.5% 1/10W
R72	1-216-641-11	s	METAL, CHIP 390 0.5% 1/10W
R73	1-216-651-11	s	METAL, CHIP 1K 0.5% 1/10W
R75	1-216-644-11	s	METAL, CHIP 510 0.5% 1/10W
R79	1-216-639-11	s	METAL, CHIP 330 0.5% 1/10W
R81	1-216-641-11	s	METAL, CHIP 390 0.5% 1/10W
R85	1-216-639-11	s	METAL, CHIP 330 0.5% 1/10W
R98	1-216-637-11	s	METAL, CHIP 270 0.5% 1/10W
R101	1-216-657-11	s	METAL, CHIP 1.8K 0.5% 1/10W
R102	1-216-643-11	s	METAL, CHIP 470 0.5% 1/10W
R103	1-216-640-11	s	METAL, CHIP 360 0.5% 1/10W
R104	1-216-611-11	s	METAL, CHIP 22 0.5% 1/10W
R105	1-216-624-11	s	METAL, CHIP 75 0.5% 1/10W
R106	1-216-619-11	s	METAL, CHIP 47 0.5% 1/10W

NOTE: Please see pages 19-51 and 19-52 for the parts that are not listed in the part list.

(VO-18P BOARD)

Ref. No. or Q'ty	Part No.	SP	Description
R111	1-216-673-11	s	METAL, CHIP 8.2K 0.5% 1/10W
R114	1-216-649-11	s	METAL, CHIP 820 0.5% 1/10W
R115	1-216-645-11	s	METAL, CHIP 560 0.5% 1/10W
R116	1-216-657-11	s	METAL, CHIP 1.8K 0.5% 1/10W
R117	1-216-659-11	s	METAL, CHIP 2.2K 0.5% 1/10W
R119	1-216-627-11	s	METAL, CHIP 100 0.5% 1/10W
R120	1-216-611-11	s	METAL, CHIP 22 0.5% 1/10W
R121	1-216-619-11	s	METAL, CHIP 47 0.5% 1/10W
R122	1-216-611-11	s	METAL, CHIP 22 0.5% 1/10W
R124	1-216-619-11	s	METAL, CHIP 47 0.5% 1/10W
R125	1-216-623-11	s	METAL, CHIP 68 0.5% 1/10W
R126	1-216-624-11	s	METAL, CHIP 75 0.5% 1/10W
R128	1-216-651-11	s	METAL, CHIP 1K 0.5% 1/10W
R130	1-216-647-11	s	METAL, CHIP 680 0.5% 1/10W
R131	1-216-638-11	s	METAL, CHIP 300 0.5% 1/10W
R140	1-216-627-11	s	METAL, CHIP 100 0.5% 1/10W
R141	1-216-659-11	s	METAL, CHIP 2.2K 0.5% 1/10W
#R142	1-216-073-00	s	METAL, CHIP 10K 5% 1/10W
R143	1-216-659-11	s	METAL, CHIP 2.2K 0.5% 1/10W
R145	1-216-645-11	s	METAL, CHIP 560 0.5% 1/10W
R146	1-216-651-11	s	METAL, CHIP 1K 0.5% 1/10W
R147	1-216-651-11	s	METAL, CHIP 1K 0.5% 1/10W
R148	1-216-636-11	s	METAL, CHIP 240 0.5% 1/10W
R149	1-216-663-11	s	METAL, CHIP 3.3K 0.5% 1/10W
R150	1-216-653-11	s	METAL, CHIP 1.2K 0.5% 1/10W
R153	1-216-619-11	s	METAL, CHIP 47 0.5% 1/10W
R154	1-216-619-11	s	METAL, CHIP 47 0.5% 1/10W
R200	1-216-675-11	s	METAL, CHIP 10K 0.5% 1/10W
R201	1-216-651-11	s	METAL, CHIP 1K 0.5% 1/10W
R202	1-216-651-11	s	METAL, CHIP 1K 0.5% 1/10W
R203	1-216-651-11	s	METAL, CHIP 1K 0.5% 1/10W
R204	1-216-651-11	s	METAL, CHIP 1K 0.5% 1/10W
R205	1-216-675-11	s	METAL, CHIP 10K 0.5% 1/10W
R301	1-249-401-11	s	CARBON 47 5% 1/4W
R302	1-249-399-11	s	CARBON 33 5% 1/4W
R303	1-249-401-11	s	CARBON 47 5% 1/4W
R304	1-249-399-11	s	CARBON 33 5% 1/4W
R502	1-216-659-11	s	METAL, CHIP 2.2K 0.5% 1/10W
R505	1-216-627-11	s	METAL, CHIP 100 0.5% 1/10W
R506	1-216-627-11	s	METAL, CHIP 100 0.5% 1/10W
R508	1-216-624-11	s	METAL, CHIP 75 0.5% 1/10W
R511	1-216-639-11	s	METAL, CHIP 330 0.5% 1/10W
R512	1-216-645-11	s	METAL, CHIP 560 0.5% 1/10W
R609	1-216-603-11	s	METAL, CHIP 10 0.5% 1/10W
R626	1-216-603-11	s	METAL, CHIP 10 0.5% 1/10W
R666	1-216-699-11	s	METAL, CHIP 100K 0.5% 1/10W
R680	1-215-373-31	s	METAL 10 1% 1/6W
R681	1-216-672-11	s	METAL, CHIP 7.5K 0.5% 1/10W
R702	1-216-630-11	s	METAL, CHIP 130 0.5% 1/10W
R703	1-216-644-11	s	METAL, CHIP 510 0.5% 1/10W
R706	1-216-644-11	s	METAL, CHIP 510 0.5% 1/10W
R710	1-216-675-11	s	METAL, CHIP 10K 0.5% 1/10W
R711	1-216-675-11	s	METAL, CHIP 10K 0.5% 1/10W
R712	1-216-667-11	s	METAL, CHIP 4.7K 0.5% 1/10W
R713	1-216-675-11	s	METAL, CHIP 10K 0.5% 1/10W
R714	1-216-675-11	s	METAL, CHIP 10K 0.5% 1/10W

(VO-18P BOARD)

Ref. No. or Q'ty	Part No.	SP	Description
R715	1-216-667-11	s	METAL, CHIP 4.7K 0.5% 1/10W
R718	1-216-664-11	s	METAL, CHIP 3.6K 0.5% 1/10W
R719	1-216-663-11	s	METAL, CHIP 3.3K 0.5% 1/10W
R720	1-216-664-11	s	METAL, CHIP 3.6K 0.5% 1/10W
#R724	1-216-077-00	s	METAL, CHIP 15K 5% 1/10W
R727	1-216-659-11	s	METAL, CHIP 2.2K 0.5% 1/10W
R728	1-216-663-11	s	METAL, CHIP 3.3K 0.5% 1/10W
R730	1-216-644-11	s	METAL, CHIP 510 0.5% 1/10W
R733	1-216-651-11	s	METAL, CHIP 1K 0.5% 1/10W
R734	1-216-651-11	s	METAL, CHIP 1K 0.5% 1/10W
R735	1-216-671-11	s	METAL, CHIP 6.8K 0.5% 1/10W
R736	1-216-631-11	s	METAL, CHIP 150 0.5% 1/10W
R741	1-216-658-11	s	METAL, CHIP 2K 0.5% 1/10W
R742	1-216-651-11	s	METAL, CHIP 1K 0.5% 1/10W
R743	1-216-619-11	s	METAL, CHIP 47 0.5% 1/10W
R744	1-216-651-11	s	METAL, CHIP 1K 0.5% 1/10W
R746	1-216-644-11	s	METAL, CHIP 510 0.5% 1/10W
R749	1-216-639-11	s	METAL, CHIP 330 0.5% 1/10W
R751	1-216-659-11	s	METAL, CHIP 2.2K 0.5% 1/10W
RV1	1-237-515-21	s	RES, ADJ, METAL 1K
RV2	1-237-503-21	s	RES, ADJ, METAL 10K
RV4	1-237-518-21	s	RES, ADJ, METAL 10K
RV5	1-237-514-21	s	RES, ADJ, METAL 500
RV7	1-237-515-21	s	RES, ADJ, METAL 1K
RV9	1-237-514-21	s	RES, ADJ, METAL 500
RV10	1-237-515-21	s	RES, ADJ, METAL 1K
RV11	1-237-515-21	s	RES, ADJ, METAL 1K
RV13	1-237-515-21	s	RES, ADJ, METAL 1K
RV14	1-237-501-21	s	RES, ADJ, METAL 2K
RV15	1-237-517-21	s	RES, ADJ, METAL 5K
RV16	1-237-512-21	s	RES, ADJ, METAL 100
RV17	1-237-512-21	s	RES, ADJ, METAL 100
RV19	1-237-512-21	s	RES, ADJ, METAL 100
RV20	1-224-935-00	s	RES, VAR METAL 200
RV21	1-224-935-00	s	RES, VAR METAL 200
RV22	1-224-935-00	s	RES, VAR METAL 200
RV23	1-237-515-21	s	RES, ADJ, METAL 1K
RV501	1-237-518-21	s	RES, ADJ, METAL 10K
RV700	1-237-514-21	s	RES, ADJ, METAL 500
RV701	1-237-516-21	s	RES, ADJ, METAL 2K
RV702	1-237-514-21	s	RES, ADJ, METAL 500
RV703	1-237-514-21	s	RES, ADJ, METAL 500
RV704	1-237-516-21	s	RES, ADJ, METAL 2K
S1	1-570-857-11	s	SWITCH, SLIDE
S2	1-571-259-11	s	SWITCH, SLIDE
S3	1-571-259-11	s	SWITCH, SLIDE
S4	1-571-259-11	s	SWITCH, SLIDE
S5	1-571-259-11	s	SWITCH, SLIDE

NOTE: Please see pages 19-51 and 19-52 for the parts that are not listed in the part list.

VR-42 BOARD

Ref. No. or Q'ty	Part No.	SP	Description
1pc	1-622-592-11	o	PRINTED CIRCUIT BOARD, VR-42
RV11	1-237-781-11	s	RES WITH SW, VAR, CARBON 10K
RV12	1-237-781-11	s	RES WITH SW, VAR, CARBON 10K

VR-61 BOARD

Ref. No. or Q'ty	Part No.	SP	Description
1pc	1-622-588-11	o	PRINTED CIRCUIT BOARD, VR-61
RV2	1-237-782-11	s	RES WITH SW, VAR, CARBON 10K
RV1	1-237-719-11	s	RES, VAR, CARBON 100K

VR-62 BOARD

Ref. No. or Q'ty	Part No.	SP	Description
1PC	1-622-589-11	o	PRINTED CIRCUIT BOARD, VR-62
RV541	1-230-501-11	s	RES, VAR CARBON 20K/20K

NOTE: Please see pages 19-51 and 19-52 for the parts that are not listed in the part list.

FRAME

Ref. No. or Q'ty	Part No.	SP	Description
1pc	A-6050-712-A	s	HEAD DRUM ASSY (DBH-18A-R)
1pc	A-6762-439-A	s	UPPER DRUM ASSY WITH PA-110 BOARD (DBR-18A-R)
1pc	A-6762-440-A	s	UPPER DRUM ASSY WITHOUT PA-110 BOARD (DBR-18-R)
1pc	⚠1-413-307-24	s	SWITCHING REGULATOR (UR-21B)
1pc	⚠1-413-558-11	s	SWITCHING REGULATOR (SOPS-1015)
1pc	1-520-496-11	s	METER, AUDIO LEVEL, VFD
1pc	1-559-261-11	o	CABLE, FLAT 10P (KY-188PC to SY-64P)
2pc	1-559-262-11	o	CABLE, FLAT 50P (MB-332,CN307 to MB-331,CN211) (MB-332,CN308 to MB-331,CN212) HARNESS (TC)
1pc	1-559-266-11	o	CABLE, FLAT 13P (RE-36 to RM-40)
CB001	⚠1-576-036-11	s	BRACKER, CIRCUIT
CN001	⚠1-560-222-21	s	AC INLET
CN002 (AUDIO CH-1 IN)	1-509-184-51	s	CONNECTOR, XLR, 3P, FEMALE
CN003 (AUDIO CH-2 IN)	1-509-184-51	s	CONNECTOR, XLR, 3P, FEMALE
CN004 (AUDIO CH-3 IN)	1-509-184-51	s	CONNECTOR, XLR, 3P, FEMALE
CN005 (AUDIO CH-4 IN)	1-509-184-51	s	CONNECTOR, XLR, 3P, FEMALE
CN006 (TIME CODE IN)	1-509-184-51	s	CONNECTOR, XLR, 3P, FEMALE
CN007 (TIME CODE OUT)	1-509-176-51	s	CONNECTOR, XLR, 3P, MALE
CN008 (CH-1 OUT)	1-509-176-51	s	CONNECTOR, XLR, 3P, MALE
CN009 (CH-2 OUT)	1-509-176-51	s	CONNECTOR, XLR, 3P, MALE
CN010 (CH-3 OUT)	1-509-176-51	s	CONNECTOR, XLR, 3P, MALE
CN011 (CH-4 OUT)	1-509-176-51	s	CONNECTOR, XLR, 3P, MALE
CN012 (MONITOR 1 OUT)	1-509-176-51	s	CONNECTOR, XLR, 3P, MALE
CN013 (MONITOR 2 OUT)	1-509-176-51	s	CONNECTOR, XLR, 3P, MALE
CN014 (MONITOR OUT)	1-509-095-21	s	CONNECTOR, 8P
CN015 (VIDEO-1 OUT)	1-561-781-31	s	CONNECTOE, BNC, FEMALE
CN016 (VIDEO-2 OUT)	1-561-781-31	s	CONNECTOE, BNC, FEMALE

(FRAME)

Ref. No. or Q'ty	Part No.	SP	Description
CN017 (VIDEO-3 OUT)	1-561-781-31	s	CONNECTOE, BNC, FEMALE
CN018 (REF VIDEO OUT)	1-561-781-31	s	CONNECTOE, BNC, FEMALE
CN019 (DUB/COMPONENT 1 OUT)	1-562-160-11	s	CONNECTOE, R-F, 12P,FEMALE
CN021 (REF VIDEO IN)	1-561-781-41	s	CONNECTOE, BNC, FEMALE
CN022 (REF VIDEO IN (THROUGH OUT))	1-561-781-41	s	CONNECTOE, BNC, FEMALE
CN023 (VIDEO IN)	1-561-781-41	s	CONNECTOE, BNC, FEMALE
CN024 (VIDEO IN (THROUGH OUT))	1-561-781-41	s	CONNECTOE, BNC, FEMALE
CN025 (DUB/COMPONENT 1 INUT)	1-564-407-11	s	CONNECTOE, R-M, 12P, MALE
CN026 (COMPONENT 2 Y IN)	1-561-781-41	s	CONNECTOE, BNC, FEMALE
CN027 (COMPONENT 2 R-Y IN)	1-561-781-41	s	CONNECTOE, BNC, FEMALE
CN028 (COMPONENT 2 B-Y IN)	1-561-781-41	s	CONNECTOE, BNC, FEMALE
CN029 (COMPONENT 2 Y OUT)	1-561-781-31	s	CONNECTOE, BNC, FEMALE
CN030 (COMPONENT 2 R-Y OUT)	1-561-781-31	s	CONNECTOE, BNC, FEMALE
CN031 (COMPONENT 2 B-Y OUT)	1-561-781-31	s	CONNECTOE, BNC, FEMALE
CN44 (to switching regulator (SOPS-1015))	⚠1-562-285-11	o	HOUSING, 4P
	⚠1-562-210-11	o	CONTACT, FEMALE AWG22-18
CN1F (to CAPSTAN MOTOR)	1-562-153-11	o	HOUSING, 8P
	1-564-026-00	o	CONTACT, FEMALE AWG26-30
CN1F (to DP-121 board)	1-569-197-11	o	HOUSING, 4P
	1-569-193-11	o	CONTACT, FEMALE AWG24-30
CN1F (to TR-18 board)	1-509-985-12	o	HOUSING, IL 4P
	1-509-982-21	s	CONTACT, FEMALE AWG22-28
CN2F (to SR-26 board)	1-569-199-31	o	HOUSING, 6P
	1-569-194-11	o	CONTACT, FEMALE AWG24-30
CN8F (to PTC-39 board)	1-562-151-11	o	HOUSING, 6P
	1-564-026-00	s	CONTACT, FEMALE AWG26-30
CN114F(to MB-331 board)			

(FRAME)

Ref. No. or Q'ty	Part No.	SP	Description
	1-569-196-11	o	HOUSING, 3P
	1-569-194-11	o	CONTACT, FEMALE AWG24-30
CN115F(to MB-331 board)			
	1-569-196-11	o	HOUSING, 3P
	1-569-194-11	o	CONTACT, FEMALE AWG24-30
CN116F(to MB-331 board)			
	1-569-196-31	o	HOUSING, 3P
	1-569-194-11	o	CONTACT, FEMALE AWG24-30
CN117F(to MB-331 board)			
	1-569-196-41	o	HOUSING, 3P
	1-569-194-11	o	CONTACT, FEMALE AWG24-30
CN118F(to MB-331 board)			
	1-569-196-31	o	HOUSING, 3P
	1-569-194-11	o	CONTACT, FEMALE AWG24-30
CN119F(to MB-331 board)			
	1-569-196-11	o	HOUSING, 3P
	1-569-194-11	o	CONTACT, FEMALE AWG24-30
CN120F(to MB-331 board)			
	1-569-199-31	o	HOUSING, 6P
	1-569-194-11	o	CONTACT, FEMALE AWG24-30
CN121F(to MB-331 board)			
	1-569-199-11	o	HOUSING, 6P
	1-569-194-11	o	CONTACT, FEMALE AWG24-30
CN124F(to MB-331 board)			
	1-562-154-31	o	HOUSING, 9P
	1-564-026-00	o	CONTACT, FEMALE AWG26-30
CN129F(to MB-331 board)			
	1-569-197-11	o	HOUSING, 4P
	1-569-194-11	o	CONTACT, FEMALE AWG24-30
CN131F(to MB-331 board)			
	1-562-153-11	o	HOUSING, 8P
	1-564-026-00	s	CONTACT, FEMALE AWG26-30
CN133F(to MB-331 board)			
	1-569-196-41	o	HOUSING, 3P
	1-569-194-11	o	CONTACT, FEMALE AWG24-30
CN134F(to MB-331 board)			
	1-569-196-21	o	HOUSING, 3P
	1-569-194-11	o	CONTACT, FEMALE AWG24-30
CN141F(to MB-331 board)			
	1-563-872-11	o	HOUSING, 8P
	1-563-869-11	o	CONTACT, FEMALE AWG26-30
CN142F(to MB-331 board)			
	1-569-196-11	o	HOUSING, 3P
	1-569-194-11	o	CONTACT, FEMALE AWG24-30
CN143F(to MB-331 board)			
	1-563-874-11	o	HOUSING, 12P
	1-563-869-11	o	CONTACT, FEMALE AWG26-30
CN201F(to switching regulator (SOPS-1015))			
	1-509-987-22	o	HOUSING, IL 6P
	1-509-982-21	o	CONTACT, IL FEMALE AWG22-28

(FRAME)

Ref. No. or Q'ty	Part No.	SP	Description
CN213F(to MB-331 board)			
	1-562-256-11	o	HOUSING, 6P
CN214F(to MB-331 board)			
	1-562-258-11	o	HOUSING, 10P
CN216F(to MB-331 board)			
	1-562-148-11	o	HOUSING, 3P
	1-564-026-00	o	CONTACT, FEMALE AWG26-30
CN217F(to MB-331 board)			
	1-562-148-21	o	HOUSING, 3P
	1-564-026-00	o	CONTACT, FEMALE AWG26-30
CN218F(to MB-331 board)			
	1-562-155-11	o	HOUSING, 10P
	1-564-026-00	o	CONTACT, FEMALE AWG26-30
CN2197F(to MB-331 board)			
	1-562-148-321	o	HOUSING, 3P
	1-564-026-00	o	CONTACT, FEMALE AWG26-30
CN220F(to MB-331 board)			
	1-562-151-11	o	HOUSING, 6P
	1-564-026-00	o	CONTACT, FEMALE AWG26-30
CN221F(to MB-331 board)			
	1-562-151-31	o	HOUSING, 6P
	1-564-026-00	o	CONTACT, FEMALE AWG26-30
CN222F(to MB-331 board)			
	1-569-198-31	o	HOUSING, 5P
	1-569-194-11	o	CONTACT, FEMALE AWG24-30
CN223F(to MB-331 board)			
	1-569-198-11	o	HOUSING, 5P
	1-569-194-11	o	CONTACT, FEMALE AWG24-30
CN226F(to MB-331 board)			
	1-562-157-31	o	HOUSING, 12P
	1-564-026-00	o	CONTACT, FEMALE AWG26-30
CN227F(to MB-331 board)			
	1-569-197-11	o	HOUSING, 4P
	1-569-194-11	o	CONTACT, FEMALE AWG24-30
CN228F(to MB-331 board)			
	1-569-201-11	o	HOUSING, 8P
	1-569-194-11	o	CONTACT, FEMALE AWG24-30
CN229F(to MB-331 board)			
	1-569-201-31	o	HOUSING, 8P
	1-569-194-11	o	CONTACT, FEMALE AWG24-30
CN230F(to MB-331 board)			
	1-569-205-31	o	HOUSING, 12P
	1-569-194-11	o	CONTACT, FEMALE AWG24-30
CN231F(to MB-331 board)			
	1-569-205-41	o	HOUSING, 12P
	1-569-194-11	o	CONTACT, FEMALE AWG24-30
CN235F(to MB-331 board)			
	1-562-149-11	o	HOUSING, 4P
	1-564-026-00	o	CONTACT, FEMALE AWG26-30
CN309F(to MB-332 board)			

(FRAME)

Ref. No. or Q'ty	Part No.	SP	Description
	1-562-155-11	o	HOUSING, 10P
	1-564-026-00	o	CONTACT, FEMALE AWG26-30
CN311F(to MB-332 board)			
	1-562-157-41	o	HOUSING, 12P
	1-564-026-00	o	CONTACT, FEMALE AWG26-30
CN312F(to MB-332 board)			
	1-562-151-11	o	HOUSING, 6P
	1-564-026-00	o	CONTACT, FEMALE AWG26-30
CN313F(to MB-332 board)			
	1-562-147-11	o	HOUSING, 2P
	1-564-026-00	o	CONTACT, FEMALE AWG26-30
CN315F(to MB-332 board)			
	1-562-157-31	o	HOUSING, 12P
	1-564-026-00	o	CONTACT, FEMALE AWG26-30
CN316F(to MB-332 board)			
	1-509-989-12	o	HOUSING, IL 10P
	1-509-982-21	o	CONTACT, IL FEMALE AWG22-28
CN317F(to MB-332 board)			
	1-562-153-31	o	HOUSING, 8P
	1-564-026-00	o	CONTACT, FEMALE AWG26-30
CN319F(to MB-332 board)			
	1-569-198-21	o	HOUSING, 5P
	1-569-193-11	o	CONTACT, FEMALE AWG24-30
CN320F(to MB-332 board)			
	1-569-201-31	o	HOUSING, 8P
	1-569-193-11	o	CONTACT, FEMALE AWG24-30
CN322F(to KY-188PC board)			
	1-562-151-21	o	HOUSING, 6P
	1-564-026-00	o	CONTACT, FEMALE AWG26-30
CN331F(to CL-14 board)			
	1-562-157-11	o	HOUSING, 12P
	1-564-026-00	o	CONTACT, FEMALE AWG26-30
CN336F(to CL-14 board)			
	1-562-148-41	o	HOUSING, 3P
	1-564-026-00	o	CONTACT, FEMALE AWG26-30
CN416F(to CP-161 board)			
	1-569-203-11	o	HOUSING, 10P
	1-569-193-11	o	CONTACT, FEMALE AWG24-30
CN420F(to AC-96 board)			
	⚠1-562-285-11	o	HOUSING, 4P
	⚠1-562-210-11	o	CONTACT, FEMALE AWG22-18
CN421F(to AC-96 board)			
	⚠1-562-640-11	o	HOUSING, 8P
	⚠1-562-210-11	o	CONTACT, FEMALE AWG22-18
CN430F(to switching regulator (UR-21B))			
	⚠1-562-285-11	o	HOUSING, 4P
	⚠1-562-210-11	o	CONTACT, FEMALE AWG22-18
CN451F(to RM-92 board)			
	1-562-672-11	o	HOUSING, 13P
	1-564-026-00	o	CONTACT, FEMALE AWG26-30

(FRAME)

Ref. No. or Q'ty	Part No.	SP	Description
CN471F(to CP-154 board)			
	1-569-198-11	o	HOUSING, 5P
	1-569-193-11	o	CONTACT, FEMALE AWG24-30
CN472F(to CP-154 board)			
	1-569-198-41	o	HOUSING, 5P
	1-569-193-11	o	CONTACT, FEMALE AWG24-30
CN475F(to CP-154 board)			
	1-569-196-11	o	HOUSING, 3P
	1-569-193-11	o	CONTACT, FEMALE AWG24-30
CN476F(to CP-154 board)			
	1-569-196-31	o	HOUSING, 3P
	1-569-193-11	o	CONTACT, FEMALE AWG24-30
CN481F(to CP-153 board)			
	1-569-205-11	o	HOUSING, 12P
	1-569-193-11	o	CONTACT, FEMALE AWG24-30
CN482F(to CP-153 board)			
	1-569-203-21	o	HOUSING, 10P
	1-569-193-11	o	CONTACT, FEMALE AWG24-30
CN483F(to CP-153 board)			
	1-569-197-41	o	HOUSING, 4P
	1-569-193-11	o	CONTACT, FEMALE AWG24-30
CN484F(to CP-153 board)			
	1-569-199-11	o	HOUSING, 6P
	1-569-193-11	o	CONTACT, FEMALE AWG24-30
CN485F(to CP-153 board)			
	1-569-197-11	o	HOUSING, 4P
	1-569-193-11	o	CONTACT, FEMALE AWG24-30
CN513F(to SW-144PC board)			
	1-569-195-31	o	HOUSING, 2P
	1-569-194-11	o	CONTACT, FEMALE AWG24-30
CN514F(to SW-144PC board)			
	1-562-147-11	o	HOUSING, 2P
	1-564-026-00	o	CONTACT, FEMALE AWG26-30
CN534F(to BF-28 board)			
	1-562-152-11	o	HOUSING, 7P
	1-564-026-00	o	CONTACT, FEMALE AWG26-30
CN535F(to BF-28 board)			
	1-562-153-11	o	HOUSING, 8P
	1-564-026-00	o	CONTACT, FEMALE AWG26-30
CN536F(to BF-28 board)			
	1-562-153-21	o	HOUSING, 8P
	1-564-026-00	o	CONTACT, FEMALE AWG26-30
CN537F(to BF-28 board)			
	1-562-153-31	o	HOUSING, 8P
	1-564-026-00	o	CONTACT, FEMALE AWG26-30
CN538F(to BF-28 board)			
	1-562-153-11	o	HOUSING, 8P
	1-564-026-00	o	CONTACT, FEMALE AWG26-30
CN551F(to HP-33 board)			
	1-562-152-31	o	HOUSING, 7P
	1-564-026-00	o	CONTACT, FEMALE AWG26-30

(FRAME)

Ref. No. or Q'ty	Part No.	SP	Description
CN611F(to DT-15 board)			
	1-569-205-11	o	HOUSING, 12P
	1-569-194-11	o	CONTACT, FEMALE AWG24-30
CN612F(to DT-15 board)			
	1-569-203-31	o	HOUSING, 10P
	1-569-194-11	o	CONTACT, FEMALE AWG24-30
CN631F(to RE-69 board)			
	1-569-199-31	o	HOUSING, 6P
	1-569-193-11	o	CONTACT, FEMALE AWG24-30
CN632F(to RE-69 board)			
	1-569-199-11	o	HOUSING, 6P
	1-569-193-11	o	CONTACT, FEMALE AWG24-30
CN662F(to SR-26 board)			
	1-569-199-11	o	HOUSING, 6P
	1-569-193-11	o	CONTACT, FEMALE AWG24-30
CN666F(to DRUM)			
	1-509-984-12	o	HOUSING, IL 3P
	1-509-982-21	o	CONTACT, IL FEMALE AWG22-28
CN701F(to SE-146 board)			
	1-569-199-11	o	HOUSING, 6P
	1-569-193-11	o	CONTACT, FEMALE AWG24-30
CN703F(to SE-146 board)			
	1-562-157-11	o	HOUSING, 12P
	1-564-026-00	o	CONTACT, FEMALE AWG26-30
CN703F(to MB-331 board)			
	1-562-157-31	o	HOUSING, 12P
	1-564-026-00	o	CONTACT, FEMALE AWG26-30
CN801F(to RE-36 board)			
	1-562-153-11	o	HOUSING, 8P
	1-564-026-00	o	CONTACT, FEMALE AWG26-30
CN803F(to RE-36 board)			
	1-562-151-11	o	HOUSING, 6P
	1-564-026-00	o	CONTACT, FEMALE AWG26-30
CN806F(to RE-36 board)			
	1-509-984-12	o	HOUSING, IL 3P
	1-509-982-21	o	CONTACT, IL FEMALE AWG22-28
CN807F(to RE-36 board)			
	1-569-205-11	o	HOUSING, 12P
	1-569-194-11	o	CONTACT, FEMALE AWG24-30
CN811F(to RE-28PC board)			
	1-569-201-11	o	HOUSING, 8P
	1-569-194-11	o	CONTACT, FEMALE AWG24-30
CN812F(to RE-28PC board)			
	1-569-199-11	o	HOUSING, 6P
	1-569-193-11	o	CONTACT, FEMALE AWG24-30
CN813F(to RE-28PC board)			
	1-569-201-31	o	HOUSING, 8P
	1-569-194-11	o	CONTACT, FEMALE AWG24-30
CN814F(to RE-28PC board)			
	1-509-984-12	o	HOUSING, IL 3P
	1-509-982-21	o	CONTACT, IL FEMALE AWG22-28

(FRAME)

Ref. No. or Q'ty	Part No.	SP	Description
CN815F(to RE-28PC board)			
	1-562-150-11	o	HOUSING, 5P
	1-564-026-00	o	CONTACT, FEMALE AWG26-30
CN816F(to RE-28PC board)			
	1-562-151-31	o	HOUSING, 6P
	1-564-026-00	o	CONTACT, FEMALE AWG26-30
CN817F(to RE-28PC board)			
	1-562-148-31	o	HOUSING, 3P
	1-564-026-00	o	CONTACT, FEMALE AWG26-30
CN818F(to RE-28PC board)			
	1-562-148-41	o	HOUSING, 3P
	1-564-026-00	o	CONTACT, FEMALE AWG26-30
CN819F(to RE-28PC board)			
	1-562-148-11	o	HOUSING, 3P
	1-564-026-00	o	CONTACT, FEMALE AWG26-30
CN820F(to RE-28PC board)			
	1-562-157-31	o	HOUSING, 12P
	1-564-026-00	o	CONTACT, FEMALE AWG26-30
CN821F(to RE-28PC board)			
	1-562-157-11	o	HOUSING, 12P
	1-564-026-00	o	CONTACT, FEMALE AWG26-30
CN822F(to RE-28PC board)			
	1-562-149-11	o	HOUSING, 4P
	1-564-026-00	o	CONTACT, FEMALE AWG26-30
CN823F(to RE-28PC board)			
	1-561-056-13	o	HOUSING, IL 12P
	1-509-982-21	o	CONTACT, IL FEMALE AWG22-28
CN824F(to RE-28PC board)			
	1-562-153-41	o	HOUSING, 8P
	1-564-026-00	o	CONTACT, FEMALE AWG26-30
CN841F(to DR-56 board)			
	1-562-157-31	o	HOUSING, 12P
	1-564-026-00	o	CONTACT, FEMALE AWG26-30
CN842F(to DR-56 board)			
	1-562-149-31	o	HOUSING, 4P
	1-564-026-00	o	CONTACT, FEMALE AWG26-30
CN843F(to DR-56 board)			
	1-562-153-31	o	HOUSING, 8P
	1-564-026-00	o	CONTACT, FEMALE AWG26-30
CN851F(to PD-35 board)			
	1-562-147-11	o	HOUSING, 2P
	1-564-026-00	o	CONTACT, FEMALE AWG26-30
CN854F(to PD-35 board)			
	1-562-151-11	o	HOUSING, 6P
	1-564-026-00	o	CONTACT, FEMALE AWG26-30
CN861F(to PTC-20 board)			
	1-562-148-41	o	HOUSING, 3P
	1-564-026-00	o	CONTACT, FEMALE AWG26-30
CN862F(to PTC-21 board)			
	1-562-150-31	o	HOUSING, 5P
	1-564-026-00	o	CONTACT, FEMALE AWG26-30

(FRAME)

Ref. No. or Q'ty	Part No.	SP	Description
CN863F(to PTC-23 board)			
	1-562-148-21	o	HOUSING, 3P
	1-564-026-00	o	CONTACT, FEMALE AWG26-30
CN864F(to PTC-36 board)			
	1-562-147-11	o	HOUSING, 2P
	1-564-026-00	o	CONTACT, FEMALE AWG26-30
CN871F(to PTC-15 board)			
	1-562-151-11	o	HOUSING, 6P
	1-564-026-00	o	CONTACT, FEMALE AWG26-30
CN891F(to PTC-40 board)			
	1-569-199-31	o	HOUSING, 6P
	1-569-193-11	o	CONTACT, FEMALE AWG24-30
CN911F(to RP-46 board)			
	1-569-196-11	o	HOUSING, 3P
	1-569-194-11	o	CONTACT, FEMALE AWG24-30
CN913F(to RP-46 board)			
	1-569-195-11	o	HOUSING, 2P
	1-569-194-11	o	CONTACT, FEMALE AWG24-30
CN921F(to RP-46 board)			
	1-569-196-41	o	HOUSING, 3P
	1-569-193-11	o	CONTACT, FEMALE AWG24-30
CN923F(to RP-46 board)			
	1-569-195-31	o	HOUSING, 2P
	1-569-194-11	o	CONTACT, FEMALE AWG24-30
CN931F(to RP-46 board)			
	1-569-199-31	o	HOUSING, 6P
	1-569-194-11	o	CONTACT, FEMALE AWG24-30
CN933F(to RP-46 board)			
	1-569-195-41	o	HOUSING, 2P
	1-569-194-11	o	CONTACT, FEMALE AWG24-30
CN941F(to RP-46 board)			
	1-569-196-21	o	HOUSING, 3P
	1-569-193-11	o	CONTACT, FEMALE AWG24-30
CN943F(to RP-46 board)			
	1-569-195-21	o	HOUSING, 2P
	1-569-194-11	o	CONTACT, FEMALE AWG24-30
CN952F(to RP-46 board)			
	1-569-196-31	o	HOUSING, 3P
	1-569-193-11	o	CONTACT, FEMALE AWG24-30
CN953F(to RP-46 board)			
	1-569-197-11	o	HOUSING, 4P
	1-569-194-11	o	CONTACT, FEMALE AWG24-30
CN954F(to RP-46 board)			
	1-569-196-11	o	HOUSING, 3P
	1-569-193-11	o	CONTACT, FEMALE AWG24-30
CN961F(to RP-46 board)			
	1-569-196-41	o	HOUSING, 3P
	1-569-193-11	o	CONTACT, FEMALE AWG24-30
CN962F(to RP-46 board)			
	1-569-196-21	o	HOUSING, 3P
	1-569-193-11	o	CONTACT, FEMALE AWG24-30

(FRAME)

Ref. No. or Q'ty	Part No.	SP	Description
CN963F(to RP-46 board)			
	1-569-197-31	o	HOUSING, 4P
	1-569-194-11	o	CONTACT, FEMALE AWG24-30
CN964F(to RP-46 board)			
	1-569-196-31	o	HOUSING, 3P
	1-569-193-11	o	CONTACT, FEMALE AWG24-30
CN972F(to RP-46 board)			
	1-569-197-11	o	HOUSING, 4P
	1-569-193-11	o	CONTACT, FEMALE AWG24-30
CN973F(to RP-46 board)			
	1-569-198-31	o	HOUSING, 5P
	1-569-193-11	o	CONTACT, FEMALE AWG24-30
CN975F(to RP-46 board)			
	1-569-199-11	o	HOUSING, 6P
	1-569-194-11	o	CONTACT, FEMALE AWG24-30
CN981F(to RP-46 board)			
	1-509-987-12	o	HOUSING, IL 6P
	1-509-982-21	o	CONTACT, IL FEMALE AWG22-28
CN982F(to RP-46 board)			
	1-569-199-21	o	HOUSING, 6P
	1-569-193-11	o	CONTACT, FEMALE AWG24-30
H001	8-825-770-72	s	HEAD, FULL ERASE (EF291-21)
H002	8-825-554-73	s	HEAD, CTL (PS244-21A)
H003	8-825-623-21	s	HEAD, AT (EPS244-2103B) (AUDIO/TC)
H004	8-825-771-11	s	HEAD, (PS244-2103C) (CONFI)
L8	1-543-316-21	s	TAPE BEGINNING SENSOR
L9	1-543-316-21	s	TAPE END SENSOR
M001	1-541-524-11	s	MOTOR, FAN
M002	8-835-179-01	s	MOTOR, DC (MCB2B15) (THREADING)
M003	8-835-179-01	s	MOTOR, DC (MCB2B15) (REEL L/S POSITION)
M004	8-835-259-02	s	MOTOR, DC (BHF-1918A) (CAPSTAN)
M006	8-835-080-02	s	MOTOR, DC (MNR-6000A) (S-REEL)
M007	8-835-080-02	s	MOTOR, DC (MNR-6000A) (T-REEL)
M008	8-835-055-01	s	MOTOR, DC (DNR-4700A) (CASSETTE UP/DOWN)
M009	8-835-122-01	s	MOTOR, DC (DNR-5900B) (MT GUIDE)
M010	1-541-638-21	s	MOTOR, FAN
M011	1-541-638-21	s	MOTOR, FAN
ME002	1-520-494-11	s	METER, LEVEL (VIDEO/RF)
PM001	1-454-372-11	s	SOLENOID (CLEANING ROLLER)
PM002	1-454-338-11	s	SOLENOID (PINCH)
PM003	1-454-417-31	s	SOLENOID (S-BRAKE)
PM004	1-454-417-31	s	SOLENOID (T-BRAKE)
S001	⚠1-570-117-31	s	SWITCH, ROCKER 5A 250V (POWER)

PACKING MATERIALS & SUPPLIED ACCESORIES

Ref. No. or Q'ty	Part No.	SP	Description
1pc	A-6729-474-A	s	MOUNTED PCB, EX-116
(See "EX-116 BOARD" for the components.)			
1pc	A-6729-671-A	s	MOUNTED PCB, EX-167
(See "EX-167 BOARD" for the components.)			
1pc	A-6754-118-A	s	MOUNTED PCB, EX-279
(See "EX-279 BOARD" for the components.)			
1pc	3-721-869-03	o	CUSHION (UPPER)
1pc	3-721-870-02	o	CUSHION (LOWER)
1pc	2-237-802-00	s	CUSHION
2pcs	3-721-888-01	o	SPACER (SIDE)
1pc	3-167-544-01	o	SLEEVE (A)
1pc	3-167-545-01	o	SLEEVE (B)
1pc	3-721-891-01	o	SPACER (A)
1pc	3-721-892-01	o	SPACER (B)
1pc	3-738-786-02	o	INDIVIDUAL CARTON
1pc	1-555-873-13	o	CABLE, REMOTE CONTROL 9P
1pc	⚠1-556-760-11	s	CORD, POWER (3 CORE)
1pc	3-701-616-00	s	BAG, POLYETHYLENE
1pc	3-701-649-00	s	BAG, POLYETHYLENE
4pcs	7-682-965-01	s	SCREW +PSW 4X16

OPTIONAL FIXTURE

Ref. No. or Q'ty	Part No.	SP	Description
	J-6001-820-A	o	DRUM ECCENTRICITY GAUGE (3)
	J-6001-830-A	o	DRUM ECCENTRICITY GAUGE (2)
	J-6001-840-A	o	DRUM ECCENTRICITY GAUGE (1)
	J-6031-820-A	o	MULTI CONNECTOR CABLE (BIBNC)
	J-6080-011-A	o	REEL TABLE TENSION GAUGE
	J-6086-570-A	o	FLATNESS PLATE
	J-6087-000-A	o	DRUM ECCENTRICITY GAUGE (5)
	J-6152-450-A	o	WIRE CLEARANCE GAUGE
	J-6190-800-A	o	TENSION REGULATOR SLANTNESS CHECK TOOL
	J-6320-680-A	o	REEL TABLE HEIGHT GAUGE
	J-6320-870-A	o	REEL MOTOR SHAFT SLANTNESS CHECK TOOL
	J-6320-880-A	o	CASSETTE REFERENCE PLATE (L)
	J-6332-240-A	o	VISC PHASE ADJUSTMENT JIG
	Y-2031-001-0	o	CLEANING FLUID
	2-034-697-00	o	CLEANING PIECE
	7-723-902-00	o	INSPECTION MIRROR
	7-732-050-20	o	TENSION SCALE (50G FULL SCALE)
	7-732-050-30	o	TENSION SCALE (100G FULL SCALE)
	8-960-096-78	o	ALIGNMENT TAPE, CR2-2B(PS)
	8-960-096-79	o	ALIGNMENT TAPE, CR9-1B(PS)
	8-960-096-86	o	ALIGNMENT TAPE, CR8-1B PS
	8-960-096-91	o	ALIGNMENT TAPE, CR5-1B PS
	8-960-098-44	o	ALIGNMENT TAPE, CR5-2A PS
	8-960-098-45	o	ALIGNMENT TAPE, CR8-1A PS
	9-911-053-00	o	THICKNESS GAUGE
	Standard Products		HEAD DEMAGNETIZER (HE-4)

SECTION 20
CHANGED PARTS

NOTE: The numbers identified by marking with) are matching with each serial numbers.
006) Serial No. 10034 and higher
007) Serial No. 10054 and higher
008) Serial No. 10074 and higher
009) Serial No. 10109 and higher
010) Serial No. 10109 and higher

AU-75P BOARD

OLD)	C403	1-163-101-00 s CERAMIC, CHIP 22PF 5% 50V
008)	C403	NOT IN USE
OLD)	C503	1-163-101-00 s CERAMIC, CHIP 22PF 5% 50V
008)	C503	NOT IN USE
OLD)	R404	NOT IN USE
008)	R404	1-216-097-00 s METAL, CHIP 100K 5% 1/10W
OLD)	R504	NOT IN USE
008)	R504	1-216-097-00 s METAL, CHIP 100K 5% 1/10W
OLD)	R815	1-215-463-00 s METAL 56K 1% 1/6W
006)	R815	1-215-473-00 s METAL 150K 1% 1/6W
OLD)	R816	1-215-473-00 s METAL 150K 1% 1/6W
006)	R816	1-215-469-00 s METAL 100K 1% 1/6W
OLD)	R818	1-215-473-00 s METAL 150K 1% 1/6W
006)	R818	1-215-479-00 s METAL 270K 1% 1/6W
OLD)	R819	1-216-683-11 s METAL, CHIP 22K 0.5% 1/10W
006)	R819	1-216-681-11 s METAL, CHIP 18K 0.5% 1/10W
OLD)	R825	1-215-466-00 s METAL 75K 1% 1/6W
006)	R825	1-215-477-00 s METAL 220K 1% 1/6W
OLD)	R828	1-215-479-00 s METAL 270K 1% 1/6W
006)	R828	1-215-485-00 s METAL 470K 1% 1/6W
OLD)	R829	1-216-693-11 s METAL, CHIP 56K 0.5% 1/10W
006)	R829	1-216-696-11 s METAL, CHIP 75K 0.5% 1/10W
OLD)	R831	1-215-473-00 s METAL 150K 1% 1/6W
006)	R831	1-215-466-00 s METAL 75K 1% 1/6W
OLD)	R833	1-215-472-00 s METAL 130K 1% 1/6W
006)	R833	1-215-471-00 s METAL 120K 1% 1/6W
OLD)	R834	1-216-681-11 s METAL, CHIP 18K 0.5% 1/10W
006)	R834	1-216-689-11 s METAL, CHIP 39K 0.5% 1/10W
OLD)	R836	1-215-485-00 s METAL 470K 1% 1/6W
006)	R836	1-215-491-00 s METAL 820K 1% 1/6W
OLD)	R837	1-216-697-11 s METAL, CHIP 82K 0.5% 1/10W
006)	R837	1-216-695-11 s METAL, CHIP 68K 0.5% 1/10W
OLD)	RV406	1-228-462-00 s RES, ADJ, METAL 100K
008)	RV406	NOT IN USE
OLD)	RV506	1-228-462-00 s RES, ADJ, METAL 100K
008)	RV506	NOT IN USE

BF-28 BOARD

OLD)	Q903	8-729-625-91 s TRANSISTOR 2SC2259
010)	Q903	8-729-801-46 s TRANSISTOR 2SC3064

CP-154 BOARD

OLD)	C15	NOT IN USE.
006)	C15	1-124-119-00 s ELECT 330uF 20% 16V
OLD)	C16	NOT IN USE.
006)	C16	1-124-119-00 s ELECT 330uF 20% 16V

CP-161 BOARD

OLD)	R739	1-216-113-00 s METAL, CHIP 470K 5% 1/10W
006)	R739	1-216-121-00 s METAL, CHIP 1M 5% 1/10W
OLD)	R740	1-216-113-00 s METAL, CHIP 470K 5% 1/10W
006)	R740	1-216-121-00 s METAL, CHIP 1M 5% 1/10W
OLD)	R744	1-216-113-00 s METAL, CHIP 470K 5% 1/10W
006)	R744	1-216-121-00 s METAL, CHIP 1M 5% 1/10W
OLD)	R745	1-216-113-00 s METAL, CHIP 470K 5% 1/10W
006)	R745	1-216-121-00 s METAL, CHIP 1M 5% 1/10W

DEC-42P BOARD

OLD)	D401	NOT IN USE
010)	D401	8-719-981-01 s DIODE ERA81-004
OLD)	IC211	8-759-933-52 s IC MB40778P
007)	IC211	8-759-508-58 s IC MB40778H
OLD)	X1	1-579-103-11 s VCO, 17.734475MHz
010)	x1	1-579-103-21 s VCO, 17.734475MHz

DM-56PC BOARD

OLD)	C351	NOT IN USE
006)	C351	1-107-049-00 s MICA 8.2PF 500V

EN-48P BOARD

OLD)	IC18	8-759-206-28 s IC TC74HC123F
010)	IC18	8-759-239-55 s IC TC74HC123AF
OLD)	IC39	8-759-803-77 s IC LC74HC32
010)	IC39	8-759-239-58 s IC TC74HC221AF
OLD)	IC701	8-759-206-28 s IC TC74HC123F
010)	IC701	8-759-239-55 s IC TC74HC123AF
OLD)	R86	1-216-647-11 s METAL, CHIP 680 0.5% 1/10W
010)	R86	1-216-646-11 s METAL, CHIP 620 0.5% 1/10W
OLD)	R87	1-216-675-11 s METAL, CHIP 10K 0.5% 1/10W
010)	R87	1-216-673-11 s METAL, CHIP 8.2K 0.5% 1/10W

MD-46P BOARD

OLD)	C507	1-163-117-00 s CERAMIC, CHIP 100PF 5% 50V
008)	C507	1-163-113-00 s CERAMIC, CHIP 68PF 5% 50V
OLD)	CV506	1-141-245-00 s CAP, TRIMMER 30P
008)	CV506	1-141-297-11 s CAP, TRIMMER 90P
OLD)	CV507	1-141-245-00 s CAP, TRIMMER 30P
008)	CV507	1-141-297-11 s CAP, TRIMMER 90P

RP-46 BOARD

OLD)	C642	1-163-117-00 s	CERAMIC, CHIP 100PF 5% 50V
006)	C642	1-163-125-00 s	CERAMIC, CHIP 220PF 5% 50V
OLD)	C643	1-163-117-00 s	CERAMIC, CHIP 100PF 5% 50V
006)	C643	1-163-125-00 s	CERAMIC, CHIP 220PF 5% 50V
OLD)	R606	1-216-636-11 s	METAL, CHIP 240 0.5% 1/10W
006)	R606	1-216-031-00 s	METAL, CHIP 180 0.5% 1/10W
OLD)	R622	1-216-636-11 s	METAL, CHIP 240 0.5% 1/10W
006)	R622	1-216-031-00 s	METAL, CHIP 180 0.5% 1/10W

SV-121 BOARD

OLD)	R263	1-216-073-00 s	METAL, CHIP 10K 5% 1/10W
006)	R263	1-216-295-00 s	METAL, CHIP 0-OHM

SY-64P BOARD

OLD)	C4	1-124-484-11 s	ELECT 220 20% 35V
006)	C4	1-124-455-00 s	ELECT 100 20% 16V
OLD)	C415	NOT IN USE.	
006)	C415	1-161-772-11 s	CERAMIC 0.1 10% 25V
OLD)	CN303	1-506-748-11 s	CONNECTOR, DIN 96P, MALE
009)	CN303	1-568-144-11 s	CONNECTOR, DIN 96P, MALE
OLD)	CN304	1-506-748-11 s	CONNECTOR, DIN 96P, MALE
009)	CN304	1-568-144-11 s	CONNECTOR, DIN 96P, MALE
OLD)	IC30	8-759-205-56 s	IC TA7267P
010)	IC30	8-759-234-04 s	IC TA7267BP
OLD)	IC31	8-759-205-56 s	IC TA7267P
010)	IC31	8-759-234-04 s	IC TA7267BP

SY-151 BOARD

OLD)	C214	1-161-043-00 s	CERAMIC 0.0022uF 10% 50V
006)	C214	NOT IN USE .	
OLD)	C216	NOT IN USE	
006)	C216	1-102-114-00 s	CERAMIC 470PF 10% 50V
OLD)	IC39	8-759-739-37 s	IC C512-BVW85PV1.00SY2
006)	IC39	8-759-709-06 s	IC C512-BVW85PV1.01SY2
OLD)	R290	NOT IN USE	
006)	R290	1-246-523-00 s	CARBON 120K 5% 1/4W
OLD)	R291	NOT IN USE	
006)	R291	1-249-435-11 s	CARBON 33K 5% 1/4W

TBC-7D BOARD

OLD)	IC218	8-759-803-77 s	IC LC74HC32
010)	IC218	8-759-239-58 s	IC TC74HC221AF
OLD)	R337	1-216-061-00 s	METAL, CHIP 3.3K 5% 1/10W
010)	R337	1-216-059-00 s	METAL, CHIP 2.7K 5% 1/10W
OLD)	R852	NOT IN USE.	
007)	R852	1-216-295-00 s	METAL, CHIP 0-OHM
OLD)	R853	1-216-295-00 s	METAL, CHIP 0-OHM
007)	R853	DELETED.	

TBC-12P BOARD

OLD)	IC203	8-759-933-52 s	IC MB40778P
009)	IC203	8-759-508-58 s	IC MB40778H
OLD)	IC506	8-759-933-52 s	IC MB40778P
010)	IC506	8-759-508-58 s	IC MB40778H

TC-40PC BOARD

OLD)	R212	1-216-063-00 s	METAL, CHIP 3.9K 5% 1/10W
008)	R212	1-216-081-00 s	METAL, CHIP 22K 5% 1/10W
OLD)	R221	1-216-063-00 s	METAL, CHIP 3.9K 5% 1/10W
008)	R221	1-216-081-00 s	METAL, CHIP 22K 5% 1/10W
OLD)	R227	1-216-666-00 s	METAL, CHIP 4.3K 5% 1/10W
008)	R227	1-216-042-00 s	METAL, CHIP 510 5% 1/10W

VO-18P BOARD

OLD)	IC705	8-759-206-28 s	IC TC74HC123F
010)	IC705	8-759-008-52 s	IC MC74HC123AF
OLD)	R142	1-216-049-00 s	METAL, CHIP 1K 5% 1/10W
008)	R142	1-216-073-00 s	METAL, CHIP 10K 5% 1/10W
OLD)	R724	1-216-085-00 s	METAL, CHIP 33K 5% 1/10W
010)	R724	1-216-077-00 s	METAL, CHIP 15K 5% 1/10W